DOMESTIC VENTILATION



VENTS

Fresh air in your house!

2025

VENTS
DOMESTIC VENTILATION
2025



Air handling units AirVENTS (Catalogue no. 3)

Energy saving air handling units with air flow up to 40 000 m^3/h, for use in large residential, industrial and commercial objects.



Energy saving ventilation Geothermal systems GEO VENTS (Catalogue no. 4)

Energy saving system GEO VENTS with use of the earth's surface layers heat.
High ventilation system energy efficiency and low operating costs.



Domestic fans (Catalogue no. 7)

Domestic fans with air flow up to 365 m^3/h with extra functions: timer, humidity sensor, motion sensor, etc.
Applied for premises up to 30 m^2.

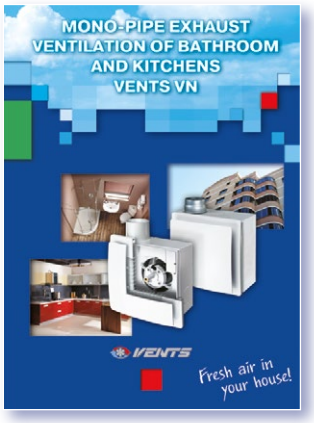

VENTS VN Mono-pipe exhaust ventilation (Catalogue no. 8)

Exhaust ventilation in houses with mono-pipe ventilation system based on VENTS VN fans.



Energy saving ventilation. Single room energy recovery ventilators MICRA. (Catalogue no.11)

MICRA single room ventilators with energy regeneration for efficient ventilation and lowest investments in ready-built and brand new premises.

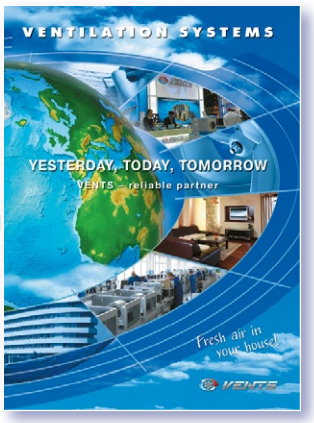

VENTS presentation catalogue (Catalogue no.12)

VENTS mission is to bring fresh air to your house and surround you with the world of comfortable microclimate.

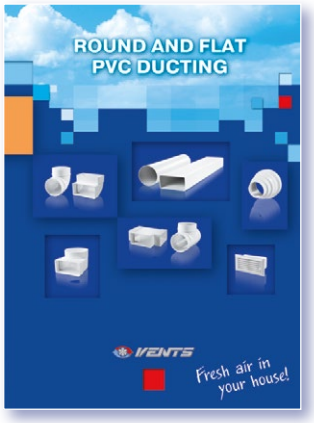

Round and flat PVC ducting (Catalogue no. 15)

Flat and round PVC ducts PLASTIVENT for ventilation of residential, office and commercial premises and connection of exhaust ventilation equipment (kitchen extractors, hoods, exhaust boxes, etc).
Wide product range of fittings.



Energy saving ventilation. Single room energy recovery ventilators TwinFresh. (Catalogue no.16)

Single room reverse ventilators with energy regeneration TwinFresh for efficient ventilation and lowest investments in ready-built and brand new premises.

2025 CATALOGUES

VENTS

CONTENT

About VENTS..... 20-21

Ventilation in our life..... 22-25

Domestic fans..... 26-169

Electrical accessories..... 170-184

Air distribution units..... 185-331

Flexible air ducts for ventilation and air conditioning
ALUVENT, POLYVENT, ISOVENT, THERMOVENT..... 332-358

Flat and round PVC ductworks PLASTIVENT..... 359-396

Access doors for accessing concealed equipment and utility lines..... 397-411

Plastic HVAC grilles PROFIPLAST..... 412-424

Metal grilles for HVAC..... 428-471

INTELLECTUAL FANS

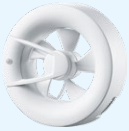

Intellectual fan
Arc
page 32



Intellectual fan
Arc Smart
page 34



Intellectual fan
iFan
iFan Move
page 36



Intellectual fan
iFan Wi-Fi
iFan Move Wi-Fi
page 38

LOW-NOISE AND ENERGY-SAVING AXIAL FANS



Low-noise and energy-saving axial fans
VENTS Quiet
page 42



Low-noise and energy-saving axial fans
VENTS Quiet DC
page 42



Low-noise and energy-saving axial fans
VENTS Quiet-dMEV DC
page 46



Low-noise and energy-saving axial fans
VENTS Quiet-Style
page 48



Low-noise and energy-saving axial fans
VENTS Quiet-S
page 50



Low-noise and energy-saving axial fans
VENTS Quiet-Disc
page 52



Low-noise and energy-saving axial fans
VENTS Quiet Duo
page 54



Low-noise and energy-saving axial fans
VENTS Quiet-Mild
page 56



Low-noise and energy-saving axial fans
VENTS Silenta-M
page 58



Low-noise and energy-saving axial fans
VENTS Silenta-S
page 60



Low-noise and energy-saving axial fans
VENTS Style
page 62



Low-noise and energy-saving axial fans
VENTS Alta
page 64



Low-noise and energy-saving axial fans
VENTS Style DUO
page 66



Axial decorative fans
VENTS Solid
page 68



Low-noise and energy-saving axial fans
VENTS Solid Glass
page 70



Axial decorative fans
VENTS Wave
page 72



Axial decorative fans
VENTS Wave One
page **74**



Axial decorative fans
VENTS Flip
page **76**



Axial decorative fans
VENTS Flip One
page **78**



Axial decorative fans
VENTS MF
page **80**



Axial decorative fans
VENTS MF Duo
page **82**



Axial decorative fans
VENTS MF One
page **84**



Axial decorative fans
VENTS Casto
page **86**



Axial decorative fans
VENTS Casto Duo
page **88**



Axial decorative fans
VENTS Casto One
page **90**

AXIAL INLINE FANS



Axial inline fans
VENTS Quietline
page **94**



Axial inline fans
VENTS VKO
VENTS VKOk
page **98**

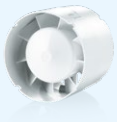

Axial inline fans
VENTS VKO1
VENTS VKO1k
page **100**

AXIAL WALL- AND CEILING-MOUNTED FANS



Axial fans
VENTS M
page **104**



Axial fans
VENTS M3
page **106**



Axial fans
VENTS M1
page **108**



Axial fans
VENTS MA
page **110**



Axial fans
VENTS X1
page **112**



Axial fans
VENTS Simple
page **114**



Axial fans
VENTS F

page **116**



Axial fans
VENTS K

page **118**



Axial fans
VENTS K1

page **120**



Axial fans
VENTS PF

page **122**



Axial fans
VENTS S

page **124**



Axial fans
VENTS D

page **126**



Axial fans
VENTS LP

page **128**

AXIAL DECORATIVE FANS



Axial decorative fans
VENTS LD

page **132**



Axial decorative fans
VENTS LD Auto

page **134**



Axial decorative fans
VENTS LD light

page **136**



Axial decorative fans
VENTS X

page **138**



Axial decorative fans
VENTS X
VENTS X star

page **140**



Axial decorative fans
VENTS Lumis

page **142**



Axial decorative fans
VENTS RO black

page **144**

AXIAL WINDOW FANS



Axial window fans
VENTS MAO1

page **148**



Axial window fans
VENTS VV

Axial window reverse fans
VENTS VVR

page **150**

CENTRIFUGAL FANS



Centrifugal single speed fans
Fantom

page **154**



Centrifugal single speed fans
Fantom DC

page **156**



Centrifugal single speed fans
CF Series
page 158



Centrifugal single speed fans
HBF series
page 160

ACCESSORIES FOR DOMESTIC FANS



Back valve
KO series
page 162



Window flange
FO Series
page 163

ELECTRICAL ACCESSORIES



Fan control unit
BU-1-60
page 170



Thyristor controllers
SRS-1, RS-1-300, RS-1-400, RS-...N (V)
page 171



Autotransformer controller
RSA
page 177



Speed switches
SP3-1, P2, P3, P5
page 178



Temperature regulators
RT, RTS, RTSD
page 181



Transformers
TRF
page 184

PLASTIC VENTILATION GRILLES



Supply and exhaust grilles
Art-Deco Flora
page 190



Supply and exhaust grilles
MV 100 Series
page 192



Supply and exhaust grilles
MV 101, MV 103 Series
page 194



Supply and exhaust grilles
MV 120 Series
page 198



Supply and exhaust grilles
MV 121 Series
page 200



Supply and exhaust grilles
MV 123 Series
page 202



Supply and exhaust grilles
MV 125, MV 125-1 Series
page 204



Supply and exhaust grilles
MV 126, MV 126-1 Series
page 206



Supply and exhaust grilles
MV 127 Series
page 208



Supply and exhaust grilles
MV 128 Series
page 209



Supply and exhaust grilles
MV 130 Series
page 210



Supply and exhaust grilles
MV 131 Series
page 212



Supply and exhaust grilles
MV 150 V Series
page 214



Supply and exhaust grilles
MV 151 V Series
page 215



Supply and exhaust grilles
MV 150, MV 150-1 Series
page 216



Supply and exhaust grilles
MV 160 Series
page 218



Supply and exhaust grilles
MV 170 Series
page 219



Supply and exhaust grilles
MV 180 Series
page 220



Supply and exhaust grilles
MV 181 Series
page 222



Supply and exhaust grilles
MV 250, MV 250-1 Series
page 224

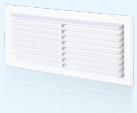

Supply and exhaust grilles
MV 80-1 Series
page 227



Supply and exhaust grilles
Single-element MV Series (from MV 150x150 to MV 350x350)
page 228



Supply and exhaust round grilles
MV 50 bV, MV 51 bV
page 229

Supply and exhaust round grilles
MV 52 bV Series
page 230



Supply and exhaust round grilles
MV 80 bV, MV 81 bV Series
page 231



Supply and exhaust round grilles
MV 100 bV, MV 125 bV, MV 150 bV Series
page 232



Outer ventilation hood
MVVM 162 Series
page 233



Supply and exhaust round grilles
MV 80 bF, MV 100 bF, MV 120 bF, MV 150 bF Series
page 234



Supply and exhaust hoods
MV 102, MV 122, MV 152 Series
page 236



Exhaust grilles
MV 100 J Series
page 238



Exhaust grilles
MV 120 J, MV 150 VJ Series
page 239



Exhaust grilles
MV 160 J Series
page 240



Exhaust grilles
MV 250 J Series

page 241



Exhaust grilles
MV 100 K, MV 125 K Series

page 242



Exhaust grilles
MV 100 KV, MV 120 KV, MV 125 KV Series

page 243

ASA PLASTIC VENTILATION GRILLES



Supply and exhaust grilles
MV 100 V ASA series

page 246



Supply and exhaust grilles
MV 120 ASA series

page 247



Supply and exhaust grilles
MV 150 V ASA series

page 248



Supply and exhaust grilles
MV 250 ASA series, MV 250-1 ASA series

page 249



Supply and exhaust grilles
MV 100 bV ASA, MV 125 bV ASA, MV 150 bV ASA series

page 250



Supply and exhaust ventilation hoods
MV 102 ASA, MV 122 ASA, MV 152 ASA series

page 251



Exhaust grilles
MV 100 J ASA series

page 252



Exhaust grilles
MV 120 VJ ASA, MV 150 VJ ASA series

page 253



Exhaust grilles
MV 250 J ASA series

page 254

DOOR PLASTIC GRILLES



Supply and exhaust door grille
MV 350 Series

page 258



Supply and exhaust door grille
MV 350/2 Series

page 259



Supply and exhaust door grille
MV 450 Series

page 260



Supply and exhaust door grille
MV 450/2 Series

page 261



Supply and exhaust door grille
MV 380 Series

page 262



Supply and exhaust door grille
MV 380/2 Series

page 263



Supply and exhaust door grille **MV 430/2 Series** page 264



Supply and exhaust door grille **MV 440/2 Series** page 265

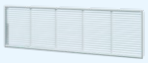

Supply and exhaust door grille **MV 240x60** page 266

SUPPLY AND EXHAUST AIR DISK VALVES



Supply and exhaust plastic air disk valves **A...VR Series** page 270



Supply and exhaust plastic air disk valves **A...VRF Series** page 272



Supply plastic air disk valves **A...PR Series** page 274



Supply plastic air disk valves **A...PRF Series** page 276



Supply metal air disk valves **AM...PRF Series** page 278



Supply and exhaust metal air disk valves **AM...VRF Series** page 280



Supply and exhaust metal air disk valves **AM...VRF N Series** page 282



Supply and exhaust plastic diffusers **MV...PF Series** page 283



Supply and exhaust plastic diffusers with light **FL 100 Series** page 284



Supply and exhaust plastic diffusers with light **FL2-100 Series** page 286

SUPPLY AND EXHAUST METAL GRILLES



Supply and exhaust single-row metal grilles **MVM Series** **MVMP Series** page 292



Supply and exhaust multiple-row metal grilles **MVMP Series** page 294



Supply and exhaust slot metal grilles **MVMP Series** page 296



Supply and exhaust single-row metal edge-raised grilles **MVMPO Series** page 297



Supply and exhaust multiple-row metal edge-raised grilles **MVMPO Series** page **298**

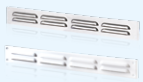

Supply and exhaust metal slot edge-raised grilles **MVMPO Series** page **300**



Supply and exhaust metal regulated grilles **MVMPO...R Series** page **301**



Supply and exhaust regulated slot metal grilles **MVMPO...Rr Series** **MVMPO...R Series** page **302**



Supply and exhaust metal door grilles **MVM Series** page **303**



Supply and exhaust metal door grilles **MVMP Series** page **304**



Supply and exhaust metal door grilles **MVMA Series** page **305**



Supply and exhaust metal grille **MVM-50 S A Series** page **306**



Supply and exhaust metal grille **MVM...bV A Series** page **307**



Supply and exhaust metal grille **MVM...bV N Series** page **308**



Supply and exhaust metal grille **MVM...b N Series** page **309**



Supply and exhaust metal hoods **MVM... bVs N / bV N Series** page **310**



Exhaust gravity metal grille **MVM...VJ N Series** page **312**



Exhaust metal hoods **MVM...V N Series** page **313**



Supply and exhaust metal grille **MVM...bVL A Series** page **314**



Supply and exhaust metal grille **MVM...VR N Series** page **315**



Supply and exhaust metal grille **MVMP...R N / R A Series** page **316**



Supply and exhaust metal grille **MVMO1...b Series** page **318**



Supply and exhaust metal grille **MVMO...bV Series** page **319**



Supply and exhaust metal grille **MVMO...bS K1 Series** page **321**

FLEXIBLE AIR DUCTS FOR VENTILATION AND AIR CONDITIONING



Aluminium foil non-insulated air ducts **Polyvent 605 series** page **332**



metalized foil non-insulated air ducts **Polyvent N series** page **333**



Metalized foil
insulated air ducts
Isovent N

page **334**



Polyvinylchloride [65 µm]
non-insulated air ducts
Polyvent 660 series

page **335**



Aluminium foil and PVC
non-insulated air ducts
Polyvent 665 Comby series

page **336**

AIR DUCTS FOR VENTILATION, HEATING AND AIR CONDITIONING

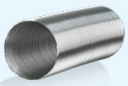

Aluminium foil
non-insulated air ducts
Aluvent series

page **340**

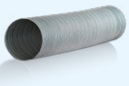

Galvanized and stainless steel non-insulated air ducts
Thermovent series

page **341**

FITTINGS



Polymer coated
Cross Tee
KM

page **346**



Galvanized steel
Cross Tee
KM...Zn Series

page **346**



Polymer coated
T-joint
TM Series

page **347**



Galvanized steel
T-joint
TM...Zn Series

page **347**



Polymer coated
Y-shaped T-joint
TMY Series

page **348**



Galvanized steel
Y-shaped T-joint
TMY...Zn Series

page **348**



Polymer coated
Reducer
RM Series

page **349**



Galvanized steel
Reducer
RM...Zn Series

page **349**



Polymer coated
Flange
FM Series

page **350**



Galvanized steel
Flange
FM...Zn Series

page **350**



Polymer coated
Reducer
FMK Series

page **351**



Galvanized steel
Reducer
FMK...Zn Series

page **351**

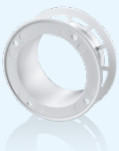

Polymer coated
Flange
F Series

page **352**



Plastic
Flange
FK Series

page **352**



Polymer coated
Reducer
PM series

page **353**



Galvanized steel
Reducer
PM...Zn series

page **353**



Mounting kit
NM Isovent Series

page **354**



Clamps

page **356**

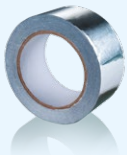

Mounting tapes

page **358**

FLAT AND ROUND PVC DUCTWORKS

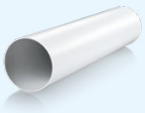

Round duct

page **370**

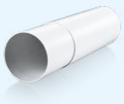

Round telescopic duct

page **371**



90° bend for round ducts

page **371**



45° bend for round ducts

page **372**



T-joint for round ducts

page **372**



Wall plate for round ducts

page **372**



Round duct connector

page **373**



Connector with backdraft damper for round ducts

page **373**



Connector with backdraft damper and wall plate for round ducts

page **374**



Connector with plate for round ducts

page **374**



Reducer

page **375**



Reducer

page **376**

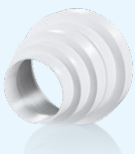

Step round reducer

page **376**



Eccentric reducer

page **377**

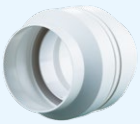

Round ducts connectors with condensation traps — page 377

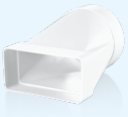

Round to flat connector — page 378



Round flexible duct connector — page 378



Round flexible duct connector — page 380



Holder for round ducts — page 380

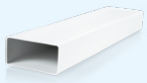

Flat duct — page 381

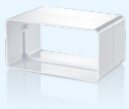

Flat duct connector — page 382



Flat duct connector with damper — page 382



Flexible flat duct connector — page 383



Air duct connector with a plate — page 383



Air duct connector with a plate and a back valve — page 384



Vertical 90° bend for flat ducts — page 384

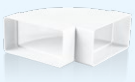

Horizontal 90° bend for flat ducts — page 385



Versatile flat angular connector — page 385

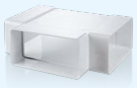

T-joint for flat ducts — page 386



Flat duct holder — page 386



90° connecting bend for flat and round ducts — page 387



90° connecting bend for flat ducts and flexible round ducts — page 387

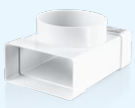

T-joint for flat and round ducts — page 387

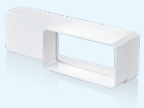

Reducer for flat ducts — page 388



Wall plate for flat ducts — page 388



End grille — page 389



End grille with air pass regulation — page 389



Reducer for flat and round ducts — page 391



Wall plate with flange — page 392



Round to flat connector (symmetric) — page 392

ROUND AND FLAT FOLDING PVC DUCT SYSTEM

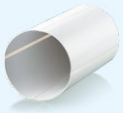

Round duct — page 395

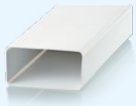

Flat duct — page 395

ACCESS DOORS FOR ACCESSING CONCEALED EQUIPMENT AND UTILITY LINES



Plastic access doors **D (D2) series** — page 397



Plastic access doors **DPV series** — page 398



Plastic (with lock) access doors **DZ series** — page 399

Plastic (double sided hinges) access doors **DD series** — page 400



Metal access doors **DM series** — page 401



Metal (with lock) access doors **DMZ series** — page 402



Metal access doors **DMR series** — page 403



Metal access doors **DMV series** — page 404



Recessed for ceramic tiles access doors **DKP series** — page 405



Recessed for ceramic tiles access doors **DKM series** — page 406



Designed for plasterboard wall or ceiling application access doors **DG series** — page 407



Access metal doors for ceiling mounting **DPM series** — page 408

PLASTIC HVAC GRILLES



Supply and exhaust grilles **NHN (NUN) series** — page 412



Supply and exhaust grilles **NVN (NUN) series** — page 414



Supply and exhaust grilles
GR series
page **416**



Supply and exhaust grilles
RD series
page **418**



Supply and exhaust grilles
ND series
page **420**



Supply and exhaust grilles
NK-3 series
page **422**



Supply and exhaust grilles
NK-4 series
page **424**

METAL GRILLES FOR HVAC



Single-row unregulated grilles
ONG, ONV
page **428**



Single-row unregulated linear grilles
ONL
page **430**



Single-row unregulated grilles
ONF, ONFS
page **432**



Single-row unregulated sectional grilles
ONK
page **434**



Single-row regulated grilles
ORG, ORV
page **436**



Single-row regulated sectional grilles
ORG R1/ORV R1
page **438**



Single-row regulated sectional grilles
ORK
page **442**



Double-row regulated grilles
DR
page **444**



Ceiling diffusers
DP
page **446**



Ceiling diffusers
DPp
page **448**

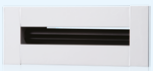

Slit diffusers
DS
page **450**



Perforated grilles
RP
page **452**



Supply and exhaust ventilation grille
RN
page **454**



Fravity grilles
RG
page **456**



Gravity grilles
RGS

page 458



Gravity grilles
GRM

page 460



Swirl diffusers
DVK

page 462



Swirl diffusers
DVP

page 463

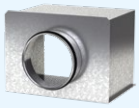

Adapters

page 464

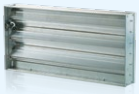

Air flow regulator

page 471

WELCOME TO THE WORLD OF VENTS!



- The company's product range includes over 50.000 items
- Over the years the company has produced 100 million fans
- The production facilities spread across 90.000 square meters of territory
- The company employs more than 3.500 professionals involved in the entire life cycle of creating ventilation equipment – from concept to high-tech product
- Among other assets the facilities include the climatic equipment research and development centre and a suite of state-of-the-art laboratories manned by 200 engineers
- The company utilises the latest metal and polymer processing technology
- 99 % of our products are made in-house
- We are the only company in the industry which develops and builds 85 % of its ventilation equipment components.

Being the world's ventilation leader VENTS offers a wide range of cutting-edge ventilation equipment to satisfy most demanding customers. Since the inception, the company's products have become popular in more than 100 countries worldwide while the VENTS brand has earned a solid reputation for quality, reliability and innovation. Every tenth domestic fan in the world rolled off the assembly line of the VENTS factory. Every time you buy a product carrying the VENTS brand you can be confident that you have made the right choice. Thanks to a comprehensive range of ventilation equipment for home, commercial and industrial application you can always find the necessary equipment and components to suit your needs. The climatic engineering and design solutions department is tasked with developing bespoke ventilation and air conditioning systems for even the most challenging projects.

Technology of the future

The VENTS factory is not just about state-of-the-art production lines equipped with processing machines from the leading global suppliers. Today this is a full-on research and development facility spreading across 150.000 square metres of territory which includes a climatic equipment research and development centre and a comprehensive suite of state-of-the-art laboratories.

The full-time staff of more than 200 engineers are continuously seeking to improve the VENTS products. The company utilises cutting-edge metal and polymer processing technology manufacturing 99 % of its products in-house.

We are the only company in the industry which develops and builds 85 % of its ventilation equipment components including electric motors, heat exchangers as well as control and automation equipment.



Getting better every day

The world of today is nothing but stable or permanent. Each day the market comes up with new expectations with regards to ventilation equipment quality and performance. Therefore, VENTS places a strong emphasis on constant development and improvement.

To this end the company has adopted a policy which includes continuous upgrades to its process equipment fleet, implementing the latest in manufacturing technology, and holding regular training workshops for its staff. Not only does this help us keep abreast with the times – these efforts help us to exceed our customers' expectations.



Uncompromising quality

VENTS maintains a stringent quality control system to make sure that its products always meet most demanding international standards as confirmed by numerous certificates issued by the world's largest and most reputable organisations for quality control.The VENTS production process is certified according to ISO 9001:2015 international standard for quality management systems of organizations and enterprises. The company operates in accordance with all the applicable environmental standards and continuously implements new technology in order to ensure compliance with the latest environmental regulations.

Energy efficiency and energy saving

Energy resources are finite and costly. This is why energy-saving is among the company's top priorities. We pay a special attention to using heat and electricity in the most efficient manner which helps us reduce the environmental footprint of the manufacturing process and develop more competitive products. The outstanding energy efficiency and low power consumption of our ventilation equipment are achieved by using high-performance EC motors and heat exchangers.

Human resources: a valuable asset



Besides maintaining technical leadership and developing new technology the company also values the people that it owes its success to.

Today VENTS employs more than 3.500 professionals involved in the entire life cycle of ventilation equipment creation – from concept to high-tech product. The company strives to create a comfortable working environment for its employees to maximise their performance and encourage their professional and personal development.

Responsible corporate citizen



Being a responsible corporate citizen VENTS takes an active part in various academic and charity initiatives. The company has a long history of cooperation with a number of educational establishments extending its support to talented youth.

The company takes an active part in student competitions and workshops sharing its wealth of practical knowledge and providing access to state-of-the-art ventilation equipment. The company employees participate in a range of charitable events and sporting competitions on a regular basis.

Following the customer's lead

VENTS uses its extensive research and technical capabilities to develop bespoke ventilation products and solutions for its customers from around the world.

Our products have earned a reputation for reliability being used in polar regions and in the Sahara desert, in the jungle of South-Eastern Asia and in the Pamir mountains.

Wherever our customers are they can always depend on prompt delivery thanks to our worldwide network of strategically located logistics centres.

The company's newest arrivals are presented by its engineers at numerous international exhibitions every year.



Welcome to the world of modern ventilation by VENTS!

VENTILATION IN OUR LIFE



What is ventilation?

Ventilation is a complex of actions and facilities used for air exchange arrangement to provide the specified air condition in the premises and in working places.
Ventilation systems maintain admissible meteorological parameters in various premises. Ventilation system should create the internal atmosphere that meets the specified hygienic standards and technological requirements.

What is ventilation required for?

We are surrounded with air and breathe in and out 20 000 litres of air every day. How much healthy is the air we breath in?
There is a range of aspects to determine air quality.

- **Oxygen and Carbon Dioxide Concentration in the Air.** Oxygen decrease and carbon dioxide cause stuffiness in the premises.
- **Harmful Substances and Dust in the Air.** High content of dust, tobacco smoke and other substances in the air are harmful for the human organism and can cause various lung and skin diseases.
- **Odours.** Bad smell causes discomfort or irritates nervous system.
- **Air Humidity.** High or low humidity causes discomfort and even may result in acute disease attacks. Air humidity is important also for the internal atmosphere. So, decreased humidity in winter can cause shrinkage and cracks of wooden doors, window frames, furniture and high humidity in swimming pools and bathrooms and other humid premises can cause excessive humidity absorption and swelling.
- **Air temperature.** A person feels comfortable in a premise with the temperature 21-23°C. Temperature variation causes the change of «comfort» well-being more or less that influences a person's physical and mental activity.
- **Air Motion.** Increased air speed in the premises causes the feeling of draft, and decreased speed causes air blanketing. Being inside we feel the impact of any of these factors.

Ventilation system arrangement

Properly arranged ventilation system is the only solution in this situation. It provides filtered air supply in summer and filtered and warmed supply air in winter as well as extract stale air removal from the premises.
Any ventilation system must include synchronous fresh air supply and extract air exhaust thus ensuring the ideal air balance in the room. In case of poor or insufficient air intake from outside the oxygen content decreases, humidity and dustiness level increase. If exhaust ventilation is not provided or it is not effective, polluted air, smells, humidity and harmful substances are not removed.
Well coordinated operation of supply and exhaust air vents is one more important factor for properly arrangement of ventilation system. In case of exhaust ventilation only (i.e. exhaust ventilation in the bathroom) air from outside flows through all possible gaps in windows, doors and walling. Such non-arranged air supply brings dust ingress, smells and drafts.
The door grilles installed in the bathrooms, wall or window vents, open windows or window leaves serve as natural sources of supply ventilation and are used to compensate air removal. However, forced mechanical ventilation with centralized air supply and distribution is a much better solution.

Calculation of the required air exchange
Engineering recommendations

Effective ventilation depends on fan or ventilation system selection with suitable air flow that meets your requirements.
Some factors to be considered:
– Ventilated area volume
– Air exchange by the hour
Multiple the ventilated premise volume by air exchange per hour and get the required fan capacity.

Air exchange calculation according to the ventilation rate in the room.

Ventilated air amount is calculated on an individual basis for each premise with respect to harmful substances content or is determined by test results. If the nature and number of harmful impurities (substances) cannot be identified or measured air exchange is calculated with the formula:

$$L = V_{area} * K_p \ (m^3/h),$$

where: V_{area} – ventilated area volume [m^3/h]. K_p – minimum air exchange per hour, see air exchange table.

How to calculate ventilated area volume?

Calculate the total volume of the premise in m^3. Use a simple formula:

Length x Width x Height = Volume of the premises m^3

A x B x H = V (m^3)

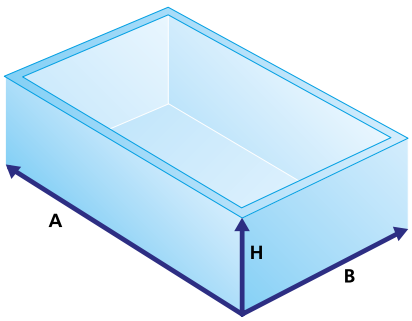

Example: premise with 5 m length, 3 m width and 2.8 m height. To determine the air volume required for ventilation of this premises, calculate the volume of the room: 5 x 3 x 2.8 = 42 m^3. After that determine the required fan capacity using the following tables of recommended ventilation rate.

Natural and mechanical ventilation

Natural ventilation requires no electric equipment such as fans or motors and is originated by natural seasonal factors as external and internal air temperature drop, pressure level as a function of height, wind loading. But no matter of the season or weather natural ventilation cannot provide full-featured air exchange. Natural ventilation is enough to provide minimum air exchange for passive ventilation of periodically occupied premises but its capacity is not enough for well balanced air exchange.
Mechanical ventilation devices ensure active air exchange and can operate continuously or periodically depending on the ventilation need. Unlike natural ventilation, mechanical ventilation operates regardless of natural conditions and indoor and outdoor temperature difference. Fan and electric motors are the basic mechanical ventilation components that provide controllable air exchange. So mechanical ventialtion is the best solution.

Natural ventilation	Mechanical ventilation
easy and value-priced, provided during construction stage	easy assembling and layout in case of correct equipment and materials selection and installation during construction or finishing works. In some cases installation after finishing works is possible
no electric mechanisms and no power supply connection	requires connection to power mains and consumes electric energy
no failure possibility	the modern fans reliability is quite high, however as all mechanical devices they can break down
weather-dependent efficiency: very low in summer	provide required ventilation no matter of season and weather conditions
limited ventilation rate regulation	higher air exchange rate is effected by switching the fan to higher speed
significant thermal losses in winter open windows for ventilation in summer	reducing heating costs in case of use of heat recovery technology
excessive air flow or backdraft in case of strong wind pressure	fans provide required air flow and backdraft dampers provide required air distribution
no air filtration, heating or cooling	filtration, heating or cooling intake air from outside before supplying it to the premise
drafts make feel uncomfortable	no draughts as ventilation does not require open windows

Air exchange rate:

Premise type		Air exchange rate
Residential premises	Living room	3 m^3/h per 1m^2 for residential premises
	Kitchen	6-8
	Bathroom	7-9
	Shower room	7-9
	WC	8-10
	Domestic laundry	7
	Dressing room	1.5
	Store room	1
	Garage	4-8
	Cellar	4-6

Ventilation shaft functionality check

Make sure of available ventilation pressure in the shaft before mounting a fan inside. Ventilation shafts may be clogged by construction waste or closed because of incorrect construction alteration of flat(s) above. To check the ventilation pressure in the shaft cover it with a paper sheet. If the ventilation pressure is enough the paper sheet sticks to the shaft surface. Otherwise you have to contact your house manager to get the ventilation shaft duly operable.

Provide even ventilation for all the premise

Air motion in the room depends not only of supply and exhaust ventilation accessories but on their location.
Fan operation generates low pressure area that attracts fresh air supply through any openings and slots. That is why location of supply and exhaust ventilation accessories is of great importance for ventilation system efficiency. In other words, air supply and air exhaust vents should be located in such a way as to ensure fresh air motion throughout all the room space. For large premises it is recommended to install several fans with low or medium capacity instead of one high-powered fan to observe the total air flow.



Fan types:

Fans are the mechanical devices that provide air motion along air ducts, direct air supply or air exhaust from the premise. Air motion is effected due to pressure drop between the fan intake and exhaust.

High efficiency at low air resistance



Axial fans are the wheels with blades (so called impeller) enclosed in cylindrical casings and attached to the hub at required angle to plane of rotation.
As impeller blades rotate air is trapped between the blades and moved further axially. Air is hardly moved in radial plane of rotation. Normally the axial fan blades are fixed directly to the motor shaft.
Application: air exhaust and air supply through free openings or vents or in assembly with air ducts mounted up to 30 m horizontally with low air resistance in the system.

Solutions for long air ducts

Turbine and scroll casing are the basic components of the **centrifugal fan**. The centrifugal fan impeller is a hollow cylinder with the blades inside that are fixed to the cylinder circumference with disk plates. The hub is located inside of these plates and is designed for mounting of the impeller on the shaft. As the impeller rotates air is trapped between its blades, gets pressurized and moves in radial direction from the center.

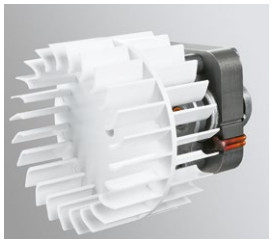

Under centrifugal force air is transported to the scroll casing and then to the exhaust pipe.
Application: air exhaust and air supply in ventilation systems with extended air ductworks and high air resistance.

Fan noise level characteristics

Noise parameters are shown in the tables that include the following characteristics:

- Noise level LWA, dBA with various frequency band groups, LWA inlet, LWA outlet and LWA surrounding.
- The total sound power level at 3 m distance.

The frequency band has eight wave groups. Each group has a definite medium frequency: 63 Hz, 125 Hz, 250 Hz, 500 Hz, 1000 Hz, 2 kHz, 4 kHz and 8 kHz.
Any noise is classified according to frequency bands and the sound energy has various frequency groups.
The sound produced by the operating fan is spread along the air duct, get partially attenuated inside the unit and penetrates through the grilles inside the premise.
Ventilation system design is based on acoustic calculation which is an integral part of any ventilation project for any construction object.
The calculation is aimed to define the octave-frequency band in various operating points and to determine the required sound attenuation level by comparing this spectrum with the permissible values according to hygienic norms and standards. After selection of the design and acoustic facilities to be used for noise level reducing the sound pressure levels are checked for consistence with expected values in the same operating points.

dBA	Characteristics	Sound source
0	no noise	
5	almost not audible	
10		low leaves rustling
15	hardly audible	medium leaves rustling
20		human whisper (1 m distance)
25	low noise	human whisper (1 m distance)
30		whisper, wall clock ticking
		standard sound level for residential premises from 23.00 till 07.00
35	audible enough	low speech
40		standard speech
		standard sound level for residential premises from 07.00 till 23.00
45		conventional conversation
50	definitely audible	conversation, typing
55		Standard sound level for class A offices (EN)
60	noisy	office standard sound level
65		loud conversation (> 1m)
70		several conversations (< 1m)
75		loud conversation (<1 m)
80	very noisy	shouting, operating motorcycle with a silencer
85		loud shouting, operating motorcycle with a silencer
90		Loud shouts, moving railway vehicle (7 m)
95		moving subway train (7 m)
100	extremely noisy	Orchestra, top noise level of the moving subway train, thunder
		Maximum permissible sound pressure for headphones of a personal stereo (EN)
105		inside the airplane (before 1980s)
110		helicopter
115		sandblaster (1 m)
120	nearly unbearable	pneumatic hammer (1 m)
130	pain threshold	airplane at start

What is IP?

While selecting the equipment and its location it is extremely important to ensure compliance of the protection rating to the operating conditions. Any electrical device must meet two protection requirements:

- safety for the user and operating personnel
- protection of the electrical components located in the device against environmental impact.

IP rating refers to dust and moisture protection of the equipment and its electrical safety. Ingress protection rating marked as IP followed by two digits is stated in the technical documentation and on the equipment casing. F.e. IP20 or IP65. The first digit means protection rating against contact to the electrical parts and contact to foreign objects. The first digit designations and characteristics are listed in the table 1.

The second digit means water ingress protection rating and its designations and characteristics are listed in the table 2.

Table 1

First digit	Protection characteristics	Description
x	No special protection	Open design, no special protection against dust ingress and contact to electrical parts.
1	Protection against large objects	Protected against large solid objects up to 50 mm, e.g. accidental contact with hands.
2	Protection against medium-sized objects	Protected against solid objects up to 12 mm, e.g. fingers contact to electrical parts.
3	Protection against small objects	Protected against penetration of solid objects over 2.5 mm (tools and wires). Protection against accidental contact to electrical parts with tools or fingers.
4	Protection against sand penetration	Protected against solid objects over 1 mm (small tools and wires). Protection against accidental contact to electrical parts with tools or fingers.
5	Protection against dust accumulation	Very limited dust ingress inside the casing that does not disturb the rated equipment operation. Total protection against contact to electrical parts.
6	Total dust ingress protection	Total protection against dust penetration.

Table 2

Second digit	Protection characteristics	Description
x	No protection	Open design, no water protection
1	Protection against vertically falling drops of water.	Vertically falling drops of water e.g. condensation cause no harmful effect for the equipment.
2	Protection against water drops falling at angle	Water drops falling at 15° or less cause no harmful effect for the equipment.
3	Protection against water sprays	Water sprays falling at 60° or less cause no harmful effect for the equipment.
4	Protection against water sprays from all directions	Water sprays from all directions cause no harmful effect for the equipment.
5	Protection against water jets	Directed water jets cause no harmful effect for the equipment in the casing.
6	Protection against flooding of water	Water flooding causes no harmful effect for the equipment in the casing.
7	Protection against immersion in water	Immersion of the casing in water causes no harmful effect for the equipment inside the casing.
8	Protection against immersion in water under pressure	Immersion of the equipment in water to some depth causes no harmful effect (protection against pressurized water, the pressure value is stated separately).

Certification

CE	CE mark means that the equipment is produced in compliance with the quality and safety standards provided by EU regulations for the given product type (marked by manufacturer).	⧈	Insulation class: double insulation.
TÜV GS	Mark of conformity to the European Quality Standards and Electrical Safety issued by Association for Technical Inspection (Technischer Überwachungsverein, Germany).	IP34	Equipment protection rating (refer to tables 1, 2).
	Mark of conformity to the Ukrainian Quality Standards and electrical safety issued by UkrTEST.		

Domestic fans options



Pull cord switch
Fan is switched on and off by a pull cord. The pull length is adjustable.



Timer
On power-off the fan continues operating within the time period set by the timer setting from 2 to 30 minutes.



Humidity sensor
Fan is equipped with an electronic processor with permanent humidity level monitoring function that prevents condensate generation. The fan switches automatically on as the relative humidity in the premise reaches the preset threshold value adjustable from 60 to 90 % and continues operating within 2 to 30 minutes according to the timer setting.



Motion sensor
Fan switches automatically on in case of motion detection in the premises and continues operating within the time period from 2 to 30 minutes according to the timer setting. The motion sensitivity area from 1 to 4 m and the detection angle up to 100°.



Ball bearings motor
Fan motors are equipped with ball bearings that ensure long service life rated for 40.000 hrs and reliable operation in case of ceiling mounting.



Turbo
Fan is equipped with a high-powered electric motor for higher air flow.



Press
Models are equipped with a 5-blade silent operation impeller with improved aerodynamics for higher fan pressure. Such impeller design allows attaining previously unachievable air flow characteristics for axial fans.



12 V
Fan is equipped with a low-voltage (12 V) electric motor for safe operation in humid areas and spaces with high water ingress probability (bathrooms, saunas etc.).



Backdraft damper
Fan is equipped with a backdraft damper for air back flow preventing. The backdraft damper is supplied as a standard with all modifications of M, M1, D, S, M3, X, X1, and LD fans. The damper is also available as a separate equipment for KO 100, KO 125, and KO 150 models.

Domestic fans designation key

VENTS	Flange diameter [mm]	Series	Built-in options	Extra Option	Motor options
	100 125 150 180 230		**V** – Pull cord switch **T** – Timer **TH** – Humidity Sensor **TP** – Motion Sensor	Backdraft damper	Ball bearings motor (**L**) **Turbo** **Press** **12 V**

Designation key example

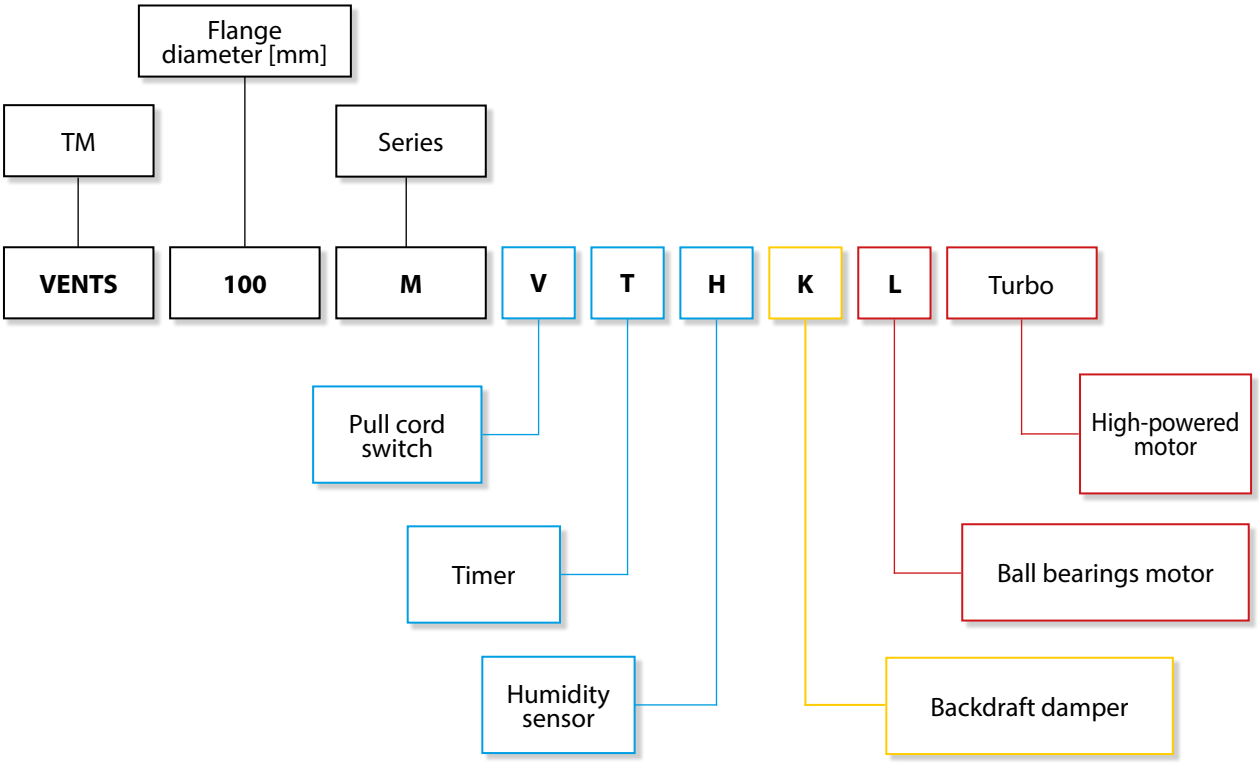

DOMESTIC FANS

FOR AREAS UP TO 30 M^2



Axial inline fans



Axial decorative fans



Low-noise and energy-saving axial fans



Centrifugal fans



Axial wall- and ceiling-mounted fans



Axial window fans

VENTS offers a wide range of domestic fans that combine outstanding performance and reliability with low power consumption and noise levels. These units are the perfect solution for ventilating bathrooms, kitchens, living quarters and other premises of up to 30 m^2.

VENTS fans are available in manifold modifications with various air flow, design and functioning.







Intellectual fans page 32



Low-noise and energy-saving axial fans page 42

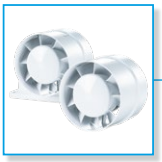

Axial inline fans page 94



Axial wall- and ceiling-mounted fans page 104



Axial decorative fans page 132



Axial window fans page 148



Centrifugal fans page 154

INTELLECTUAL FANS

ifan
intelligent fan

Intellectual ventilation era!







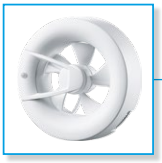

Intellectual fans
VENTS Arc
Air flow up to 140 m³/h
page 32

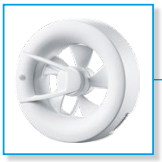

Intellectual fans
VENTS Arc Smart
Air flow up to 140 m³/h
page 34



Intellectual fans
VENTS iFan Series, VENTS iFan Move Series
Air flow up to 133 m³/h
page 36



Intellectual fans
VENTS iFan Wi-Fi, VENTS iFan Move Wi-Fi Series
Air flow up to 133 m³/h
page 38

Arc
Series

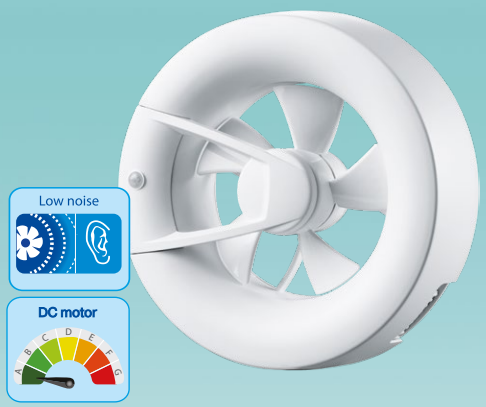

Intelligent low-noise fan for exhaust ventilation


ARC


ARC Black

Application

- Extremely quiet exhaust fan with stylish design for high comfort level in shower rooms, bathrooms, kitchens and other utility spaces.
- Intelligent integrated control functions allow to adjust personal settings for the most balanced indoor climate.

Design

- Specially designed motor and aerodynamically optimized impeller shape enable super silent operation at only 9 dBA, which is combined with high performance.
- White and black colors available.
- Due to replaceable spigots (included in the delivery set) the fan is mountable with Ø100 or Ø125 mm air ducts.



- The external motor unit is easy to remove without special tools, which grants easy servicing.
- The fan has IP44 ingress protection rating and can be installed in Zone 1 of bathrooms.



Motor

- Reliable motor on ball bearings only consumes 2.7 W of power even at maximum speed.
- The bearings are maintenance-free and are filled with grease for the whole motor service life.
- The motor is equipped with overheating protection.

Operation modes

The operation modes for the fan can be set up using a multiposition switch.

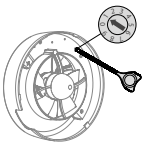

- **Mode 1**

The fan operates in permanent ventilation mode at a speed of 20 m³/h; if the motion and lighting sensors are triggered, its speed changes to 60 m³/h or to 90 m³/h if the humidity sensor is triggered.

- **Mode 2**

The fan operates in permanent ventilation mode at a speed of 40 m³/h; if the motion sensor or light sensor is triggered, its speed changes to 60 m³/h or to 90 m³/h if the humidity sensor is triggered.

- **Mode 3**

The fan operates in permanent ventilation mode at 40 m³/h; if the humidity sensor is triggered, it operates at 115 m³/h.

- **Mode 4**

The fan operates in permanent ventilation mode at a speed of 60 m³/h; if the humidity sensor is triggered, it operates at 115 m³/h.

- **Mode 5**

The fan operates in standby mode; if the motion or lighting sensor is triggered, it turns on at a speed of 60 m³/h, if the humidity sensor is triggered — at 90 m³/h.

- **Mode 6**

The fan operates in interval ventilation mode (for 30 minutes every 12 hours) at 20 m³/h; if the motion or lighting sensor is triggered, its speed changes to 60 m³/h, if the humidity sensor is triggered — at 90 m³/h.

- **Mode 7**

The fan is in standby mode; if the temperature sensor is triggered, its speed changes to 90 m³/h; the fan starts at the temperature of 28 °C and stops at 24 °C.

- **Mode 8**

The fan is in standby mode; it starts at 115 m³/h if the humidity sensor is triggered.

Sensors

HUMIDITY SENSOR

- The fan automatically selects the trigger threshold for the humidity sensor and only responds to sudden change in the indoor humidity level, ignoring seasonal humidity fluctuations.

MOTION SENSOR

- The fan switches to the selected speed if motion is detected in the room. The sensor has a trigger delay of 30 s to ignore short-term room visits.
- The fan switches to the selected speed if sudden change in lighting level in the room is detected. Smooth daily lighting changes are ignored.

TEMPERATURE SENSOR

- Designed for fan operation in heat moving mode. The sensor is triggered if the indoor air temperature reaches 28 °C and turns off at 24 °C.

TIMER

- Turn-off delay timer is designed to prolong the fan operation for 15 minutes in the mode caused by a triggered sensor or activating Boost mode.

Accessories

Air ducts



Flexible air ducts



Grilles and hoods



Clamps



Technical data

Model	Arc	
Spigot daimeter [mm]	100	125
Frequency [Hz]	50–60	
Voltage [V]	100–240	
Power consumption [W]	2.7	2.9
Current [A]	0.038	0.04
Air flow [m³/h]	115	140
Air flow [l/s]	32	39
SFP [W/l/s]	0.08	0.07
Sound pressure level [dBA]*	27	28
IP	IP44 (Zone 1)	

*Sound pressure level measured in free space at a distance of 3 meters from the fan.

Aerodynamic characteristics

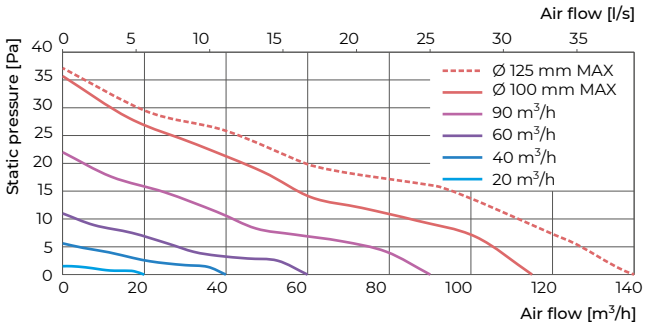

Dimensios [mm]

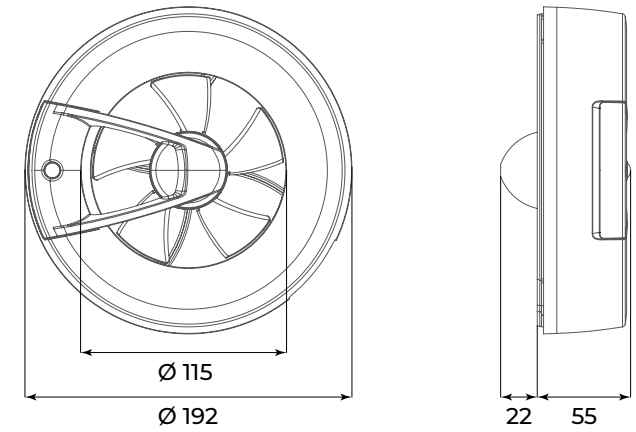

Certificates

IP44

The fans meet the applicable safety and electromagnetic compatibility standards.

Arc Smart
Series



Intelligent low-noise fan for exhaust ventilation with a Wi-Fi module and an air quality sensor


ARC Smart


ARC Smart Black

Application

- Extremely quiet exhaust fan with stylish design for high comfort level in shower rooms, bathrooms, kitchens and other utility spaces.
- Intelligent integrated control functions allow to adjust personal settings for the most balanced indoor climate.

Design

- Specially designed motor and aerodynamically optimized impeller shape enable super silent operation at only 9 dBA, which is combined with high performance.
- White and black colors available.
- Due to replaceable spigots (included in the delivery set) the fan is mountable with Ø100 or Ø125 mm air ducts.



- The external motor unit is easy to remove without special tools, which grants easy servicing.
- The fan has IP44 ingress protection rating and can be installed in Zone 1 of bathrooms.



Motor

- Reliable motor on ball bearings only consumes 2.7 W of power even at maximum speed.
- The bearings are maintenance-free and are filled with grease for the whole motor service life.
- The motor is equipped with overheating protection.

Operation modes

The fan operation modes can be set up using the Vents Home app. Fan control can also be set up via Google Home and Amazon Alexa.

Google Play

Download on the App Store

STANDBY

The fan motor does not rotate, the rotation is activated by a signal from a sensor.

24 HOURS

The fan operates at low speed for 24 hours.

If the sensor signal is received, the fan switches to a higher speed.

The „24 hours" mode speed can be adjusted within the range of 20/40/60 m^3/h.

Do not disturb – allows to set up the time interval when the sensors will not be active.

AUTOMATIC INTERVAL VENTILATION

This mode allows to ventilate the room every 12 hours for 30 minutes at the set speed of 20, 40 or 60 m^3/h

MAX (BOOST MODE)

The fan runs at the maximum speed for the duration set on the turn-off delay timer.

Sensors

HUMIDITY SENSOR

- The fan automatically selects the trigger threshold for the humidity sensor and only responds to sudden change in the indoor humidity level, ignoring seasonal humidity fluctuations.

MOTION SENSOR

- The fan switches to the selected speed if motion is detected in the room. The sensor has a trigger delay of 30 s to ignore short-term room visits.

LIGHTING SENSOR

- The fan switches to the selected speed if sudden change in lighting level in the room is detected. Smooth daily lighting changes are ignored.

TEMPERATURE SENSOR

- Designed for fan operation in heat moving mode. The sensor is triggered if the indoor air temperature reaches 28 °C and turns off at 24 °C.

TIMER

- Turn-off delay timer is designed to prolong the fan operation for 15 minutes in the mode caused by a triggered sensor or activating Boost mode.

Accessories

Air ducts



Flexible air ducts



Grilles and hoods



Clamps



Technical data

Model	Arc Smart	
Spigot daimeter [mm]	100	125
Frequency [Hz]	50–60	
Voltage [V]	100–240	
Power consumption [W]	2.7	2.9
Current [A]	0.038	0.04
Air flow [m³/h]	115	140
Air flow [l/s]	32	39
SFP [W/l/s]	0.08	0.07
Sound pressure level [dBA]*	27	28
IP	IP44 (Zone 1)	

*Sound pressure level measured in free space at a distance of 3 meters from the fan.

Aerodynamic characteristics

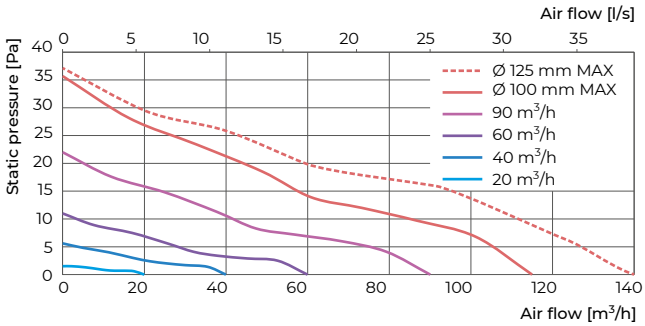

Dimensios [mm]

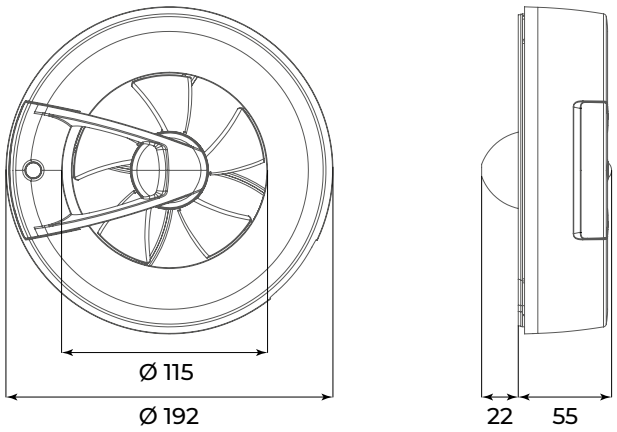

Certificates

IP44

The fans meet the applicable safety and electromagnetic compatibility standards.

iFan
iFan Move
Series



Intellectual axial fans for exhaust ventilation with air flow up to 133 m³/h

Application

- Innovative exhaust fan with stylish design for new comfort level in shower rooms, bathrooms, kitchens and other residential premises.
- Intellectual integrated control functions let adjust personal settings for the most balanced microclimate.

Design

- Unique motor design and aerodynamic impeller profile ensure the minimum noise level – only 21 dBA whereas the air flow remains high.



- Front panel 3D design and rich colour palette of replaceable decorative panels give zest to the most refined interior.
- Due to replaceable spigots the fan is suitable for mounting with Ø 100 or Ø 125 mm air ducts.



- The motor-impeller block is easy to remove without special tools which grants easy servicing.



- The fan has a ultra-thin casing with its thickness only 29 mm without a spigot.
- The fan is equipped with an integrated on/off power slide switch for quick disconnection from power mains.

Motor

- Reliable motor on ball bearings with minimum energy demand up to 3.8 W.
- The bearings are maintenance-free and are filled with grease for the motor service life.
- The fan is powered through an integrated pulse power supply unit with a wide power supply range from 100 to 240 V and 50 to 60 Hz. The fan is suitable for application in various countries and has stable operation in versatile power mains.
- The motor is installed on a rubber anti-vibration connector for vibration absorbing and silent fan operation.
- The motor is equipped with overheating protection.

Modifications and Options

ifan Basic model with intellectual humidity control.

ifan MOVE Model with intellectual humidity control and extra motion sensor control.

Intellectual functions

- Multi-functional control panel for control of intellectual functions.

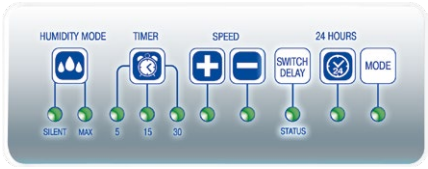

HUMIDITY MODE / Humidity control adjustments

- The fan is equipped with an intellectual humidity sensor with three operation modes:

SLEEP – the fan is ready to accept a signal from the humidity sensor or external switch.

SILENT – optimum humidity extraction mode that provides sufficient air flow (up to 83 m³/h) combined with silent operation.

MAX – excessive humidity extraction mode with highest speed and maximum air flow (up to 133 m³/h).

TIMER / Control of time / humidity extraction / switch delay time / turn-off delay time

- The fan is equipped with three timers:

Humidity timer – setting of the fan operation for total humidity extraction after its stabilization (30, 45, 60 min).

Turn-off timer – the fan continues operation for 5, 15 or 30 minutes after activation of the motion sensor or the external switch and then reverts to the previous operation mode.

Switch delay timer – adjust the switch delay timer to avoid the fan unnecessary switching if you use your bathroom shortly and frequently. After humidity increases or after signal from the external switch/motion sensor, the fan switches to higher speed not immediately, but after the timer countdown (0, 2 and 5 minutes).

SPEED / Fan speed adjustments

- The fan has smooth ten step speed control:

– for **SILENT** mode: from 40/33 to 83/72 m³/h (Ø 125/100 mm);

– for **MAX** mode: from 83/72 to 133/106 m³/h (Ø 125/100 mm);

24 HOURS / Permanent ventilation

- Permanent low-speed operation mode ensures continuous minimum air exchange in the room with air flow 40/33 m³/h (Ø 125/100 mm). After humidity change the fan is switched to MAX mode (by default) or SILENT mode. The fan is switched to SILENT mode after signal from the motion sensor or external switch.

Automatic interval ventilation

- Integrated function of automatic ventilation switching. Once in 15 hours the fan is switched on for 2 hours to ventilate the premise with air flow 83/72 m³/h (Ø 125/100 mm).

MOVE / Motion sensor (for the model iFan Move)

- The fan is switched to SILENT mode automatically in case of a signal from the motion sensor with the reach distance 1-4 m and viewing angle 100°.

Decorative front panel colours*



melange | silver | ruby star | topaz violet | graphite | black sapphire

* The decorative panels are available separately.

Aerodynamic characteristics

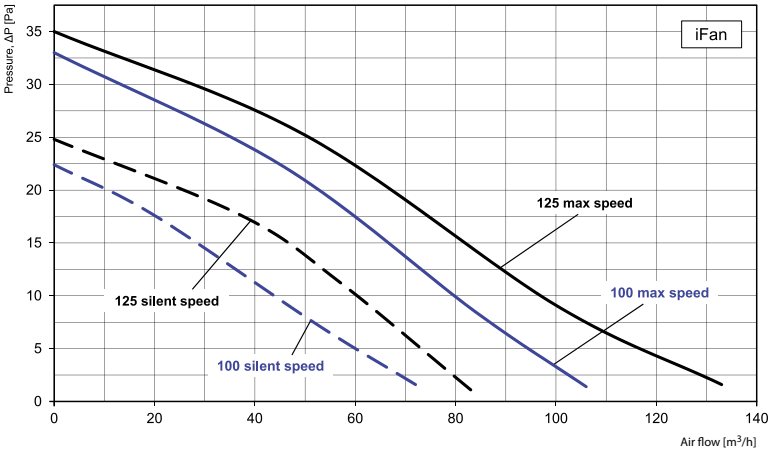

Overall dimensions

Model	Dimensions [mm]				
	Ø D	B	H	L	L1
iFan iFan Move	100/125	152	206	57	29

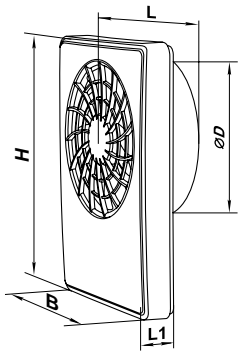

Technical data

Model	Spigot diameter [mm]	Mode	Max. air capacity [m³/h]	Sound Pressure Level [dBA]*	Air flow, factory settings [m³/h]	Regulation range [m³/h]
iFan iFan Move	100	24 HOURS	33	17	33	-
		SILENT	72	22	72	33...72
		MAX	106	31	82	72...106
	125	24 HOURS	40	17	40	-
		SILENT	83	21	83	40...83
		MAX	133	32	97	83...133

*Sound pressure level measured in free space at a distance of 3 meters from the fan.

Certificates

IP44

The fans meet the applicable safety and electromagnetic compatibility standards.

Series
iFan Wi-Fi
iFan Move Wi-Fi



Intellectual axial fan with an integrated Wi-Fi module for exhaust ventilation with air flow up to
133 m³/h

17	1.6	133
dBA	W	m³/h

Application

- Innovative exhaust fan with stylish design for new comfort level in shower rooms, bathrooms, kitchens and other residential premises.
- Intellectual integrated control functions allow adjusting personal settings for the most balanced microclimate.

Design

- Specially designed motor and aerodynamically optimized impeller shape provide super silent operation at only 17 dBA, which is combined with high air performance.



- Front panel 3D design and rich colour palette of replaceable decorative panels give zest to the most refined interior.
- Due to replaceable spigots the fan is suitable for mounting with Ø100 or Ø125 mm air ducts.



- The motor-impeller block is easy to remove without special tools which grants easy servicing.



- The fan has an ultra-thin casing with a thickness of only 29 mm without a spigot.
- The fan is equipped with an integrated on/off power slide switch for quick disconnection from power mains.

Motor

- Reliable motor on ball bearings with minimum energy demand up to 6 W.
- The bearings are maintenance-free and are filled with grease for the whole motor service life.
- The fan is powered through an integrated pulse power supply unit with a wide power supply range from 100 to 240 V and 50 to 60 Hz. The fan is suitable for application in various countries and has stable operation in versatile power mains.
- The motor is installed on a rubber anti-vibration connector for vibration absorbing and silent fan operation.
- The motor is equipped with overheating protection.

Modifications

Model with intellectual humidity control and automatic heat distribution.

Model with intellectual humidity control, automatic heat distribution and extra motion sensor control.

Operation modes

The operating mode for the iFan Wi-Fi fan can be selected using an application for Android or iOS.

24 HOURS / Non-stop ventilation

Silent – permanent low-speed operation mode. If the humidity changes, the fan switches to a higher speed (MAX mode). The fan is switched to Silent mode after signal from the motion sensor or external switch.

Do not disturb – the function is only available when the 24 hours mode is activated. This function allows for setting the time interval so that the fan will not respond to sensors or switch actuation, and will operate at minimum speed (Silent).

TIMER/Turn-on and turn-off delay timers

Turn-on delay timer allows to delay switching to a higher speed by 2 or 5 minutes after sensor activation.

Turn-off delay timer is designed to prolong the fan operation for 5, 15, 30 or 60 minutes in the mode caused by sensor activation or Boost mode activation.

Automatic interval ventilation

Automatic interval ventilation (function is only available when the 24 hours mode is deactivated). This mode allows ventilating the room every 12 hours for 30 minutes at the set speed.

Silent mode

The fan runs at Silent speed. The speed can be adjusted in the range from 30 % to 100 % of the fan maximum performance.

Max (Boost Mode)

The fan runs at Max speed. The speed can be adjusted in the range from 30 % to 100 % of the fan maximum performance.

HUMIDITY SENSOR / Humidity control adjustment

The fan has an integrated intelligent humidity sensor with the following operation modes:

Manual mode allows setting the humidity threshold in range from 40 % to 80 %. If this threshold is exceeded, the fan turns on or switches to higher speed.

Auto – intelligent humidity control. This mode provides for humidity threshold change and fan speed selection in automatic mode. The fan independently selects the optimum humidity threshold for the room in which it is installed. Fan operation algorithm is selected based on analysing the statistical data of indoor humidity level.

Automatic operation based on temperature sensor. If the air temperature exceeds the set point, the fan will switch to Max speed and will return to the previous mode only after indoor temperature drops by 4 °C below the set point.

MOTION SENSOR / Motion sensor (for the iFan Move Wi-Fi model)

When the motion sensor is activated, the turn-on delay timer is switched on. Then the fan will switch to Silent speed. Once there is no motion detected, and after turn-off delay time the fan will switch to standby mode.

Decorative front panel colours*

Silver


Violet Topaz


Graphite


Black Sapphire

*decorative front panels are available upon separate order

Aerodynamic characteristics

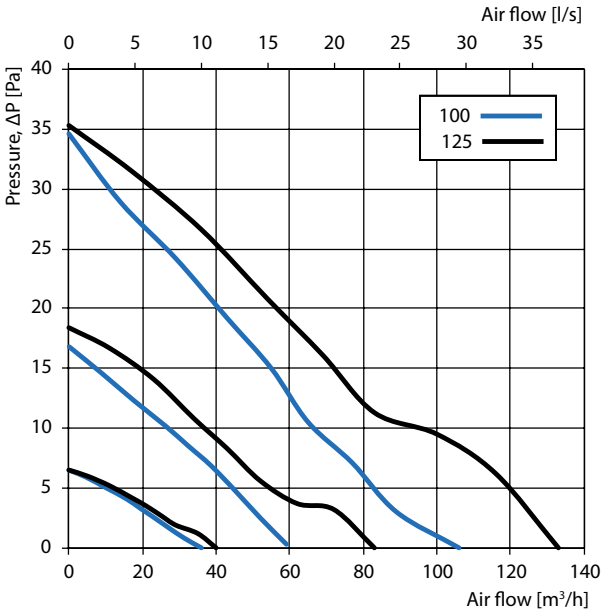

Overall dimensions

Model	Dimensions [mm]				
	Ø D	B	H	L	L1
iFan Wi-Fi iFan Move Wi-Fi	100/125	152	206	57	29

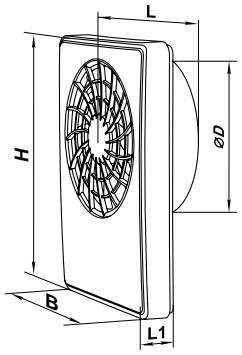

Technical data

Model	iFan Wi-Fi iFan Move Wi-Fi					
Duct diameter [mm]	100			125		
Speed	24 hours	Silent	Max	24 hours	Silent	Max
Frequency [Hz]	50/60					
Voltage [V]	100-240					
Power [W]	1.6	2.9	5.6	1.7	3	6
Current [A]	0.02	0.04	0.06	0.03	0.04	0.07
RPM [min^{-1}]	950	1650	2150	850	1350	2200
Maximum air flow [m³/h]	33	72	106	40	83	133
Maximum air flow [l/s]	9	20	29	11	23	37
Air flow control range [m³/h]	-	33…106		-	40…133	
Air flow control range [l/s]	-	9…29		-	11…37	
SFP [W/l/s]	0.17	0.14	0.19	0.15	0.13	0.16
Sound Pressure Level [dBA]*	17	21	31	17	22	32
IP	IP44					

*Sound pressure level measured in free space at a distance of 3 meters from the fan.

Certificates

IP44

The fans meet the applicable safety and electromagnetic compatibility standards.

LOW-NOISE AND ENERGY-SAVING AXIAL FANS



Low-noise and energy-saving axial fans
VENTS Quiet Series
Air flow – up to 370 m³/h
page **42**



Low-noise and energy-saving axial fans
VENTS Quiet DC Series
Air flow – up to 101 m³/h
page **42**



Low-noise and energy-saving axial fans
VENTS Quiet-dMEV DC Series
Air flow – up to 83 m³/h
page **46**



Low-noise and energy-saving axial fans
VENTS Quiet-Style Series
Air flow – up to 90 m³/h
page **48**



Low-noise and energy-saving axial fans
VENTS Quiet-S Series
Air flow – up to 99 m³/h
page **50**



Low-noise and energy-saving axial fans
VENTS Quiet-Disc Series
Air flow – up to 370 m³/h
page **52**



Low-noise and energy-saving axial fans
VENTS Quiet Duo Series
Air flow – up to 170 m³/h
page **54**



Low-noise and energy-saving axial fans
VENTS Quiet-Mild Series
Air flow up to 370 m³/h
page **56**



Low-noise and energy-saving axial fans
VENTS Silenta-M Series
Air flow up to 240 m³/h
page **58**



Low-noise and energy-saving axial fans
VENTS Silenta-S
Air flow up to 240 m³/h
page **60**

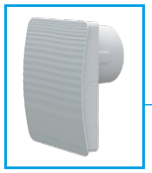

Low-noise and energy-saving axial fans
VENTS Style Series
Air flow up to 97 m³/h
page **62**



Low-noise and energy-saving axial fans
VENTS Alta Series
Air flow up to 90 m³/h
page **64**



Low-noise and energy-saving axial fans
VENTS Style DUO Series
Air flow up to 90 m³/h
page 66



Axial decorative fans
VENTS Solid Series
Air flow up to 155 m³/h
page 68



Low-noise and energy-saving axial fans
VENTS Solid Glass Series
Air flow up to 90 m³/h
page 70



Axial decorative fans
VENTS Wave Series
Air flow up to 85 m³/h
page 72



Axial decorative fans
VENTS Wave One Series
Air flow up to 85 m³/h
page 74



Axial decorative fans
VENTS Flip Series
Air flow up to 85 m³/h
page 76



Axial decorative fans
VENTS Flip One Series
Air flow up to 85 m³/h
page 78



Axial decorative fans
VENTS MF Series
Air flow up to 255 m³/h
page 80



Axial decorative fans
VENTS MF Duo Series
Air flow up to 300 m³/h
page 82



Axial decorative fans
VENTS MF One Series
Air flow up to 300 m³/h
page 84



Axial decorative fans
VENTS Casto Series
Air flow up to 255 m³/h
page 86



Axial decorative fans
VENTS Casto Duo Series
Air flow up to 300 m³/h
page 88



Axial decorative fans
VENTS Casto One Series
Air flow up to 300 m³/h
page 90

VENTS Quiet Series



Intellectual axial low-noise and energy-saving fan for exhaust ventilation with air flow up to 370 m³/h

Application

- Innovative exhaust fan with stylish design for new comfort level in shower rooms, bathrooms, kitchens and other residential premises.
- Maximum air flow combined with low noise level provide the ideal microclimate.
- Mounting into ventilation shafts or connection to Ø 100, 125, 150 mm.

Design

- Casing and impeller made of high-quality and durable UV-resistant plastic.
- Specially designed impeller aerodynamic profile provides high air flow and low noise.
- The compact design enables wall and ceiling mounting.
- The shortened spigot for mounting into a ventilation shaft or connection to Ø 100, 125, 150 mm air ducts.
- The fan is equipped with a specially designed back valve to prevent back flow and heat losses during the fan standby.
- The fan exhaust spigot incorporates specially designed air rectifiers to reduce air turbulence, increase air pressure and lower noise level.
- High ingress protection rating ensures makes the fan the ideal solution for ventilation of a bathroom. The electronic components are protected with tight covers. Models VENTS Quiet 150 and VENTS Quiet Extra 150 are additionaly equipped with a special vibration absorbing sealer along the fan countour.

Motor

- Low energy demand from 7.5 W due to new high-efficient motor.
- Maintenance-free bearings contain enough grease for 40 000 hrs non-stop operation.
- Motor on special anti-vibration dampers for vibration absorbing and silent operation.
- Motor equipped with overheating protection.
- VENTS Quiet 150 supplied with 2 speed motor. VENTS Quiet Extra 150 supplied with 2 speed high powered motor.

Modifications and Options

Quiet Extra – high-powered motor.

Quiet T – off-delay timer modification with operating time from 2 to 30 min.

Quiet TH – off-delay timer modification with the operating time from 2 to 30 min and humidity sensor with threshold from 60 to 90 %.

Quiet V – pull-cord switch modification.

Quiet VT – modification with pull-cord switch and off-delay timer with operating time from 2 to 30 min.

Quiet VTH – modification with pull-cord switch, off-delay timer with operating time from 2 to 30 min and humidity sensor with threshold from 60 to 90 %.

Quiet TP – modification with off-delay timer with operating time from 2 to 30 min and motion sensor; reach distance up to 4 m, viewing angle up to 100°.

* Models VENTS Quiet 150 with modification T / TP / VT / VTH additionaly supplied with turn-on delay timer adjustable from 0 up to 2 minutes.

Operation modes of the VENTS Quiet 150 and VENTS Quiet Extra 150

Operation modes of the fans models VENTS Quiet 150 and VENTS Quiet Extra 150 with modifications T, TH, VT, VTH, TP is selected by setting the DIP switch into the required position.

Mode 1 (single-speed mode)

- The fan is turned off by default. The fan starts operating at the 1st speed when the switch is closed or one of the sensors is activated.

Mode 2 (single-speed mode)

- The fan is turned off by default. The fan starts operating at the 2nd speed when the switch is closed or the sensors are activated.

Mode 3 (two-speed mode)

- The fan operates at the 1st speed by default. The fan switches to the 2nd speed when the switch is closed or the sensors are activated.

Mode 4 (two-speed mode)

- The fan is turned off by default. The fan starts operating at the 1st speed when the switch is closed and switches to the 2nd speed when the humidity sensor is activated.

Mode 5 (two-speed mode)

- The fan is turned off by default. The fan starts operating at the 1st speed when the switch is closed or when the humidity sensor is activated. If during the operation at the 1st speed the second even takes place. i.e. the switch is closed or the humidity sensor is activated, the fan switches to the 2nd speed.

Control

Manual control:

- Manual control with a room light switch. The switch is not included into delivery set.
- The fan is controlled by the built-in pull cord switch **V**. Not applied in case of ceiling mounting.
- Speed control is possible through a thyristor speed controller or through speed switch P2-1-300 (only for VENTS Quiet 150 models), see Electrical Accessories. Several fans may connected to the same controller. Speed controllers can not be connected to the fans with T, TH, TP, VT, VTH modification.

Automatic control:

- By the electronic control unit **BU-1-60** (see Electrical Accessories). The control unit is supplied separately.
- By the timer **T** (the built-in turn-off delay timer enables the fan operation within 2 to 30 minutes after the fan switching off).
- By the humidity sensor and timer **TH** (if the humidity level in the room exceeds the sensor threshold within 60-90 % the fan switches automatically on and operates until the humidity level drops to the standard level, after that the fan continues operating within the set time period and shuts down).
- By the motion sensor and timer **TP** (if motion is detected in the reach area, the fan is switched automatically and operates within the set time period from 2 to 30 min). Reach distance up to 4 m, the max. viewing angle 100°.

Mounting features

- Installation directly inside a ventilation shaft.
- Flexible air ducts may be used in case of remote location of the ventilation shaft. Connection of the air duct to the exhaust flange with a clamp.
- Wall mounting with screws.
- Suitable for ceiling mounting.

Colour modifications


Quiet 100/125/150
Red RAL 3013


Quiet 100/125/150
Vintage


Quiet 100/125/150
Chrome


Quiet 100/125/150
Black Sapphire

Technical data

Model	Speed	Frequency [Hz]	Voltage [V]	Power Consumption [W]	Current [A]	Maximum air capacity [m³/h]	Sound Pressure Level [dBA]*	Weight [kg]	IP
VENTS Quiet 100	–	50	220-240	7.5	0.049	97	25	0.55	IP45
VENTS Quiet 100 (220 V/60 Hz)		60	220						
VENTS Quiet 125	–	50	220-240	17	0.11	185	32	0.78	
VENTS Quiet 125 (220 V/60 Hz)		60	220						
VENTS Quiet 150	max.	50/60	220-240	19	0.09	315	33	1.33	IP45
	min.			17	0.08	220	28		
VENTS Quiet Extra 150	max.	50/60	220-240	22	0.1	370	38	1.33	
	min.			19	0.09	280	32		

*Sound pressure level measured in free space at a distance of 3 meters from the fan.

Aerodynamic characteristics

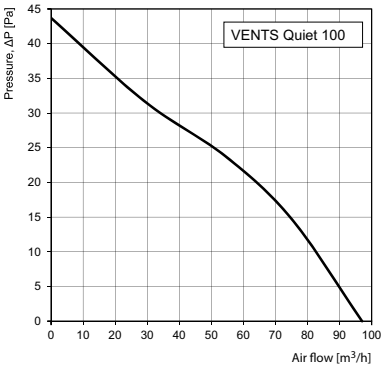

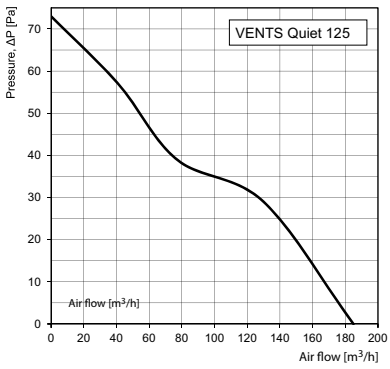

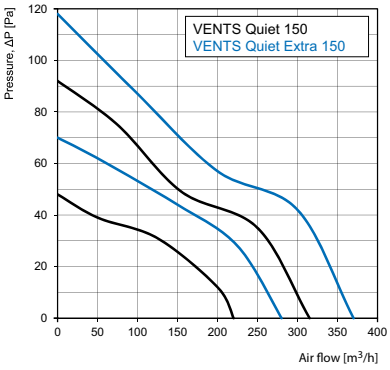

Overall dimensions

Model	Dimensions [mm]			
	Ø D	B	L	L1
VENTS Quiet 100	99	158	81	26
VENTS Quiet 125	123.5	182	91	27
VENTS Quiet 150	147.5	214	111	32
VENTS Quiet Extra 150				

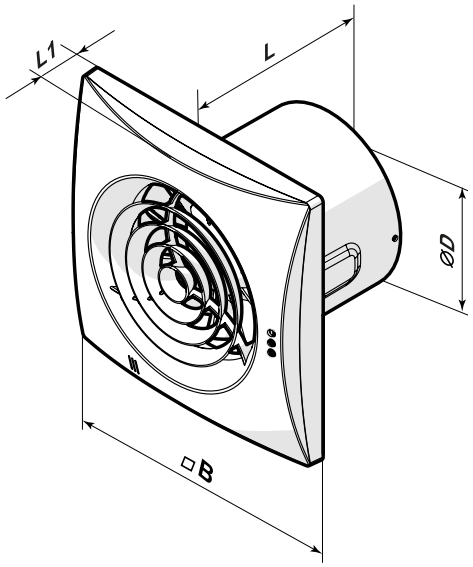

Certificates

IP45

The fans meet the applicable safety and electromagnetic compatibility standards.

VENTS Quiet DC Series



Updated version of low-noise axial fans with DC motors for low energy consumption

Application

- Innovative extract fan with stylish design for enhanced comfort level in shower rooms, bathrooms, kitchens and other residential premises.
- Maximum air flow combined with low noise level provide the ideal microclimate.
- Mounting into ventilation shafts or connection to Ø 100 mm air ducts.
- Two-speed operation modes with max. air flow 100 m^3/h.

Design

- The casing and the impeller are made of high-quality and durable UV-resistant plastic.
- The specially designed aerodynamic profile of the mixed-flow impeller provides high air flow and pressure combined with low-noise operation.
- A shortened spigot for mounting into a ventilation shaft or direct connection to Ø 100 mm air duct.
- The fan is equipped with a specially designed backdraft damper to prevent back flow and heat losses during the fan standby.
- The fan exhaust spigot incorporates specially designed air rectifiers to reduce air turbulance, noise level and boost air pressure.
- High ingress protection rating makes the fan the ideal solution for ventilation of a bathroom. The electronic components are protected with tight covers.

Motor

- Low energy demand up to 3.5 W due to a new high-efficient motor.
- Maintenance-free bearings contain enough grease for 40 000 hrs non-stop operation.
- Motor equipped with electric overheating protection.

Modifications and Options

Quiet DC T: modification with a turn-off delay timer regulated from 2 up to 30 minutes. All the Quiet DC fans have this timer by default.

Quiet DC TH: modification with a turn-off delay timer regulated from 2 up to 30 minutes and a humidity sensor with an adjustable threshold from 60 to 90 %.

Quiet DC VT: modification with a pull cord switch and a turn-off delay timer regulated from 2 up to 30 minutes.

Quiet DC VTH: modification with a pull cord switch, a turn-off delay timer regulated from 2 up to 30 minutes and a humidity sensor with an adjustable threshold from 60 to 90 %.

Quiet DC TP: modification with a turn-off delay timer regulated from 2 up to 30 minutes and a motion sensor with reach distance up to 4 m and viewing angle up to 100°.

Operation modes of Quiet 100 DC fan with an integrated turn-off delay timer, humidity sensor and motion sensor.

Operation mode selection and setup for Quiet 100 DC models with modifications T, TH, VT, VTH, TP is performed by setting the DIP switch to a respective position.

Mode 1 (single-speed mode)

- The fan is turned off by default. The fan starts operating at the low speed when the switch is closed or one of the sensors is activated.

Mode 2 (single-speed mode)

- The fan is turned off by default. The fan starts operating at the high speed when the switch is closed or one of the sensors is activated.

Mode 3 (two-speed mode)

- The fan operates at the low speed by default. The fan switches to the high speed when the switch is closed or the sensors are activated.

Mode 4 (two-speed mode)

- The fan is turned off by default. The fan starts operating at the low speed when the switch is closed and switches to the high speed when the humidity or motion sensor is activated.

Control

Manual control:

- Manual operation with a room light switch. The switch is not included in the delivery set.
- Operation with the integrated pull cord switch **V**. Not applied in case of ceiling mounting.

Automatic control:

- With the electronic control unit **BU-1-60** (see Electrical Accessories). The control unit is supplied separately.
- With the turn-off delay timer **T**. The built-in turn-off delay timer enables operation of the fan within 2 up to 30 minutes after turning the fan off with a switch.
- With the humidity sensor and timer **TH**. If the indoor humidity exceeds the set humidity point adjustable from 60 to 90 %, the fan switches automatically to the high speed and operates until the humidity level drops below the set point. After that the fan continues operating according to the timer settings and turns either to the low speed or turns off.
- With the motion sensor and the timer **TP**. If the motion sensor detects motion in the reach area up to 4 m with a viewing angle up to 100°, the fan turns on and operates from 2 to 30 minutes according to the timer settings.

Mounting features

- Installation directly inside a ventilation shaft.
- Flexible air ducts may be used in case of remote location of the ventilation shaft. The air duct is connected to the exhaust spigot with a fixing clamp.
- Wall mounting with screws.
- Suitable for ceiling mounting.

Colour modifications


Quiet 100 DC Red RAL 3013


Quiet 100 DC Vintage


Quiet 100 DC Chrome


Quiet 100 DC Black Sapphire

Technical data

Model	Speed	Frequency [Hz]	Voltage [V]	Power consumption [W]	Current [A]	R.p.m.	Maximum air capacity [m³/h]	Sound Pressure Level [dBA]*	Weight [kg]	IP
VENTS Quiet DC	min.	50/60	220-240	1.5	0.063	1850	70	22	0.55	IP45
	max.			3.5	0.137	2650	101	27		

*Sound pressure level measured in free space at a distance of 3 meters from the fan.

Aerodynamic characteristics

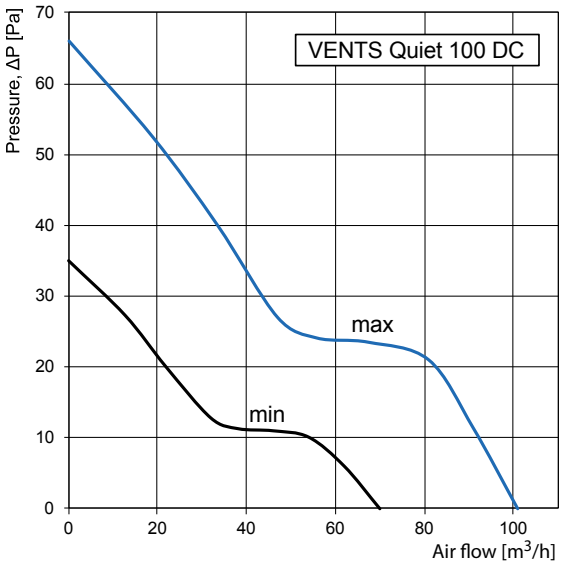

Overall dimensions

Model	Dimensions [mm]			
	Ø D	B	L	L1
VENTS Quiet DC	99	158	81	26

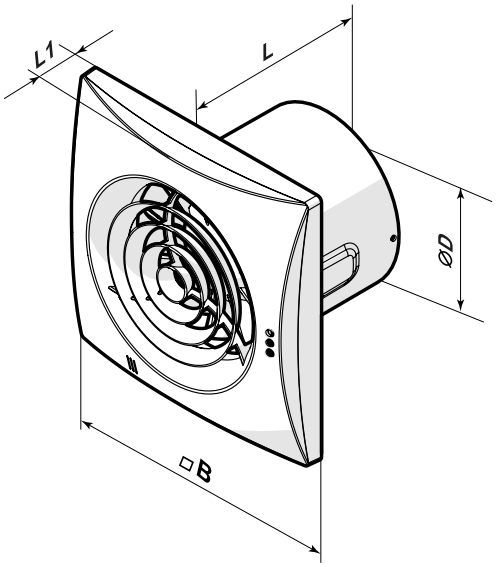

Certificates

IP45

The fans meet the applicable safety and electromagnetic compatibility standards.

VENTS Quiet-dMEV DC Series



Updated version of low-noise axial fans with DC motors for low energy consumption

Application

- Innovative extract fan with stylish design for enhanced comfort level in shower rooms, bathrooms, kitchens and other residential premises.
- Maximum air flow combined with low noise level provides the ideal indoor microclimate.
- Mounting into ventilation shafts or connection to Ø 100 mm air ducts.
- Two operation modes with the speed up to 100 m³/h

Design

- The casing and the impeller are made of high-quality and durable UV-resistant plastic.
- The specially designed aerodynamic profile of the mixed-flow impeller provides high air capacity, powerful pressure and low operation noise.
- A shortened spigot enables to mount the fan into a ventilation shaft or connect it to a Ø 100 mm air duct.
- The specially designed air backdraft damper prevents air backdraft and heat losses during standstill of the fan.
- The fan exhaust spigot is equipped with specially designed air rectifiers that reduce air turbulence, noise level and boost air pressure.
- High ingress protection rating makes the fan the ideal solution for ventilation of a bathroom.
- The electronic components are protected with tight covers.

Motor

- High-efficient direct current motor with low energy consumption of maximum 3.4 W.
- Maintenance-free bearings are greased for 40 000 hrs of non-stop operation.
- The motor is equipped with overheating protection.

Modifications and Options

Quiet-dMEV DC 12: modification with safe low-voltage 12 V ac motor.

Quiet-dMEV DC T: timer modification with a fixed turn-on delay of 60 s and a regulated turn-off delay from 2 up to 30 minutes.

Quiet-dMEV DC TH: modification with a turn-off delay timer regulated from 2 up to 30 minutes and a humidity sensor with an adjustable threshold from 60 to 90 % RF.

Quiet-dMEV DC VT: modification with a pull cord switch and a turn-off delay timer regulated from 2 up to 30 minutes.

Quiet-dMEV DC VTH: modification with a pull cord switch, a turn-off delay timer regulated from 2 up to 30 minutes and a humidity sensor with an adjustable threshold from 60 to 90 % RF.

Operation modes of Quiet-dMEV 100 DC fan with a pull cord switch, integrated turn-on and turn-off delay timer and a humidity sensor

Operation mode selection and setup for the Quiet-dMEV 100 DC models with T, TH, VT, VTH options is performed by setting the DIP switch to a respective position.

Trickle speed modes:

1 – 0 l/s: the fan is off

2 – 6 l/s: the fan runs with the speed 2

3 – 8 l/s: the fan runs with the speed 3

4 – 13 l/s: the fan runs with the speed 4

Intensive operation modes (Boost)

5 – 15 l/s: the fan runs with the speed 5

6 – max: the fan runs with the highest speed.

Operation mode 1

- The fan runs with the Trickle speed by default. In case of actuation of the pull cord switch the fan goes to the Boost speed mode.

Operation mode 2

- The fan runs with the Trickle speed by default. In case of actuation of the switch the turn-on delay timer countdown starts and then the fan starts to run with the Boost speed. After turning the fan off the turn-off delay timer is activated.

Operation mode 3

- The fan runs with the Trickle speed by default. In case of actuation of the humidity sensor the fan goes to the Boost speed mode. After decrease of the indoor humidity below the set threshold the turn-off delay timer is activated.

Control

Manual control:

- Manual operation with a room light switch. The light switch is not included in the delivery set.
- Manual operation with the integrated pull cord switch **V**. Not applied in case of ceiling mounting.

Automatic control:

- Automatic control with the electronic control unit **BU-1-60** (seeElectrical Accessories). The control unit is supplied separately.
- Automatic control with the timer **T**: the integrated timer with turn-on and turn-off delay functions enables to switch the fan to the intensive operation mode 60 seconds after the switch actuation and to keep the fan running from 2 to 30 minutes after it is turned off with the switch.
- Automatic control with the humidity sensor and timer **TH**: as the indoor humidity exceeds the set threshold from 60 % up to 90 %, the fan turns automatically on or goes to higher speed and runs until the humidity decreases below the set threshold.
- After that the fan continues to run within the set time period and then turns off or goes to lower speed.

Mounting features

- Direct installation inside a ventilation shaft.
- In case of remote location of the ventilation shaft flexible air ducts may be used.
- The air duct is connected to the exhaust spigot with a fixing clamp.
- Wall mounting with screws.
- Suitable for ceiling mounting.

Colour modifications


Quiet-dMEV 100 DC Red


Quiet-dMEV 100 DC Vintage


Quiet-dMEV 100 DC Chrome


Quiet-dMEV 100 DC Black Sapphire

Technical data

Model	Speed	Frequency [Hz]	Voltage [V]	Current [A]	Power Consumption [W]		Air capacity		Specific Power	Sound Pressure Level [dBA]*
					min.	max.	[m³/h]	[l/s]	W/l/s	
Quiet-dMEV 100 DC	Trickle Low	50/60	220-240	0.014	0.6	0.7	22	6	0.10	10
	Trickle Middle			0.017	0.8	0.9	29	8	0.10	11
	Trickle High			0.024	1.3	1.7	47	13	0.10	13
	Boost Low			0.028	1.9	2.1	54	15	0.13	14
	Boost High			0.039	3.0	3.4	83	23	0.15	21

*Sound pressure level measured in free space at a distance of 3 meters from the fan.

Aerodynamic characteristics

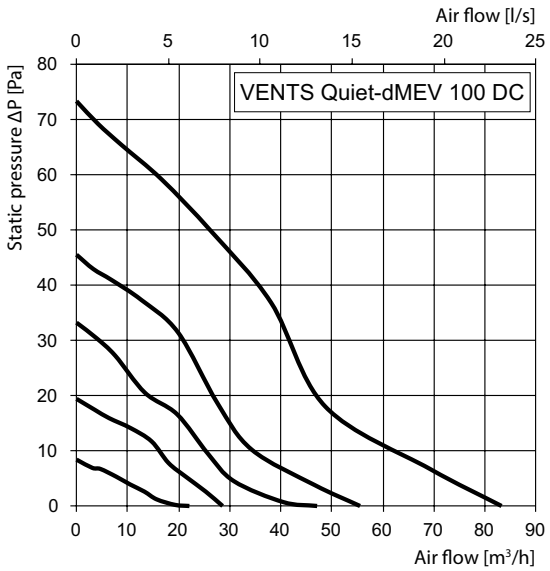

Overall dimensions

Model	Dimensions [mm]			
	Ø D	B	L	L1
VENTS Quiet-dMEV 100 DC	99	158	81	26

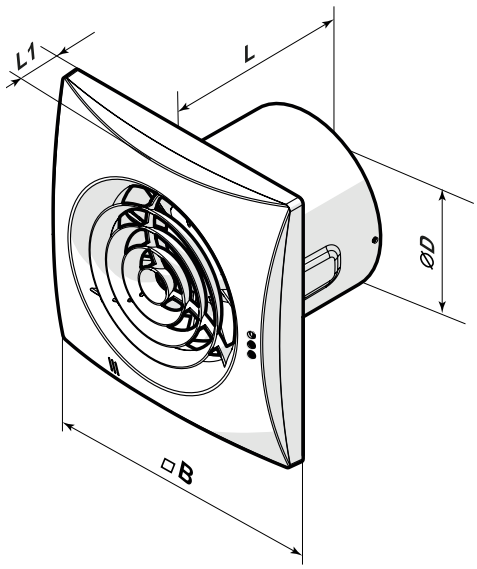

Certificates

IP45

The fans meet the applicable safety and electromagnetic compatibility standards

VENTS Quiet-Style Series



Intellectual axial low-noise and energy-saving fan for exhaust ventilation with air flow up to 90 m³/h

Application

- Innovative exhaust fan with stylish design for new comfort level in shower rooms, bathrooms, kitchens and other residential premises.
- Maximum air flow combined with low noise level provide the ideal microclimate.
- Mounting into ventilation shafts or connection to Ø 100 mm.

Design

- Casing, impeller and frontpanels made of high-quality and durable UV-resistant plastic.
- Specially designed impeller aerodynamic profile provides high air flow and low noise.
- The compact design enables wall and ceiling mounting.
- The shortened spigot for mounting into a ventilation shaft or connection to Ø 100 mm air ducts.
- The fan is equipped with a specially designed back valve to prevent back flow and heat losses during the fan standby.
- The fan exhaust spigot incorporates specially designed air rectifiers to reduce air turbulence, increase air pressure and lower noise level.
- High ingress protection rating ensures makes the fan the ideal solution for ventilation of a bathroom. The electronic components are protected with tight covers.

Motor

- Low energy demand 7.5 W due to new high-efficient motor.
- Maintenance-free bearings contain enough grease for 40 000 hrs non-stop operation.
- Motor on special anti-vibration dampers for vibration absorbing and silent operation.
- Motor equipped with overheating protection.

Modifications and Options

Quiet-Style T – off-delay timer modification with operating time from 2 to 30 min.

Quiet-Style TH – off-delay timer modification with the operating time from 2 to 30 min and humidity sensor with threshold from 60 to 90 %.

Quiet-Style V – pull-cord switch modification.

Quiet-Style VT – modification with pull-cord switch and off-delay timer with operating time from 2 to 30 min.

Quiet-Style VTH – modification with pull-cord switch, off-delay timer with operating time from 2 to 30 min and humidity sensor with threshold from 60 to 90 %.

Control

Manual control:

- Manual control with a room light switch. The switch is not included into delivery set.
- The fan is controlled by the built-in pull cord switch **V**. Not applied in case of ceiling mounting.
- Speed control is possible through a thyristor speed controller, see Electrical Accessories. Several fans may connected to the same controller. Speed controllers can not be connected to the fans with T, TH, VT, VTH modification.

Automatic control:

- By the electronic control unit **BU-1-60** (see Electrical Accessories). The control unit is supplied separately.
- By the timer **T** (the built-in turn-off delay timer enables the fan operation within 2 to 30 minutes after the fan switching off).
- By the humidity sensor and timer **TH** (if the humidity level in the room exceeds the sensor threshold within 60-90 % the fan switches automatically on and operates until the humidity level drops to the standard level, after that the fan continues operating within the set time period and shuts down).

Mounting features

- Installation directly inside a ventilation shaft.
- Flexible air ducts may be used in case of remote location of the ventilation shaft. Connection of the air duct to the exhaust flange with a clamp.
- Wall mounting with screws.
- Suitable for ceiling mounting.



Colour modifications



Quiet-Style A
(with a decorative aluminium surface-mounted panel)

Technical data

Model	Frequency [Hz]	Voltage [V]	Power Consumption [W]	Current [A]	Maximum air capacity [m³/h]	Sound Pressure Level [dBA]*	Weight, kg	IP
VENTS Quiet-Style 100	50	220-240	7.5	0.050	90	26	0.66	IP45
VENTS Quiet-Style 100 (220 V/60 Hz)	60	220						

*Sound pressure level measured in free space at a distance of 3 meters from the fan.

Aerodynamic characteristics

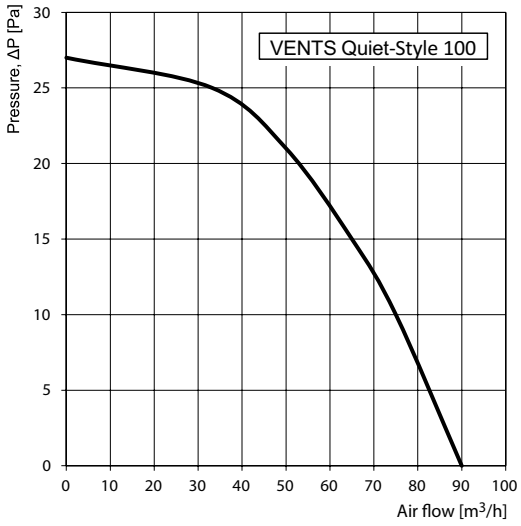

Overall dimensions

Model	Dimensions [mm]			
	Ø D	□B	L	L1
VENTS Quiet-Style 100	99	200	81	49

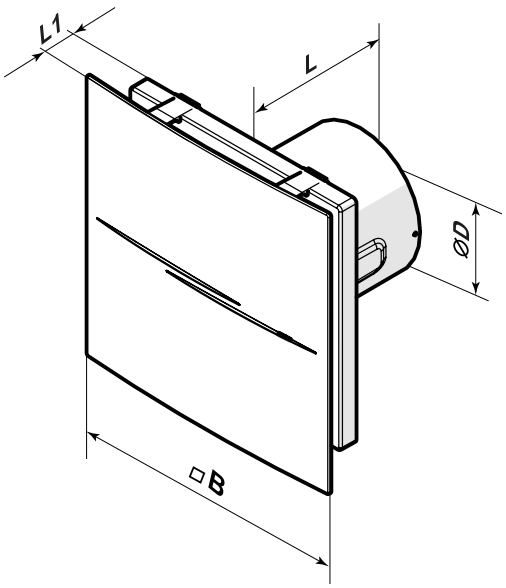

Certificates

IP45

The fans meet the applicable safety and electromagnetic compatibility standards.

VENTS Quiet-S Series



Intellectual axial low-noise and energy-saving fan for exhaust ventilation with air flow up to 99 m³/h

Application

- Innovative exhaust fan with stylish design for new comfort level in shower rooms, bathrooms, kitchens and other residential premises.
- Maximum air flow combined with low noise level provide the ideal microclimate.
- Mounting into ventilation shafts or connection to Ø 100 mm.



The delivery set includes three decorative panels in white, blue and green.

Design

- Casing, impeller and frontpanels made of high-quality and durable UV-resistant plastic.
- Specially designed impeller aerodynamic profile provides high air flow and low noise.
- The compact design enables wall and ceiling mounting.
- The shortened spigot for mounting into a ventilation shaft or connection to Ø 100 mm air ducts.
- The fan is equipped with a specially designed back valve to prevent back flow and heat losses during the fan standby.
- The fan exhaust spigot incorporates specially designed air rectifiers to reduce air turbulence, increase air pressure and lower noise level.
- High ingress protection rating ensures makes the fan the ideal solution for ventilation of a bathroom. The electronic components are protected with tight covers.

Motor

- Low energy demand 7.5 W due to new high-efficient motor.
- Maintenance-free bearings contain enough grease for 40 000 hrs non-stop operation.
- Motor on special anti-vibration dampers for vibration absorbing and silent operation.
- Motor equipped with overheating protection.

Modifications and Options

Quiet–S T – off-delay timer modification with operating time from 2 to 30 min.

Quiet–S TH – off-delay timer modification with the operating time from 2 to 30 min and humidity sensor with threshold from 60 to 90 %.

Quiet–S V – pull-cord switch modification.

Quiet–S VT – modification with pull-cord switch and off-delay timer with operating time from 2 to 30 min.

Quiet–S VTH – modification with pull-cord switch, off-delay timer with operating time from 2 to 30 min and humidity sensor with threshold from 60 to 90 %.

Quiet–S TP – modification with off-delay timer with operating time from 2 to 30 min and motion sensor; reach distance up to 4 m, viewing angle up to 100°.

Control

Manual control:

- Manual control with a room light switch. The switch is not included into delivery set.
- The fan is controlled by the built-in pull cord switch **V**. Not applied in case of ceiling mounting.
- Speed control is possible through a thyristor speed controller, see Electrical Accessories. Several fans may connected to the same controller. Speed controllers can not be connected to the fans with T, TH, VT, VTH, TP modification.

Automatic control:

- By the electronic control unit **BU–1–60** (see Electrical Accessories). The control unit is supplied separately.
- By the timer **T** (the built-in turn-off delay timer enables the fan operation within 2 to 30 minutes after the fan switching off).
- By the humidity sensor and timer **TH** (if the humidity level in the room exceeds the sensor threshold within 60-90 % the fan switches automatically on and operates until the humidity level drops to the standard level, after that the fan continues operating within the set time period and shuts down).

Mounting features

- Installation directly inside a ventilation shaft.
- Flexible air ducts may be used in case of remote location of the ventilation shaft. Connection of the air duct to the exhaust flange with a clamp.
- Wall mounting with screws.
- Suitable for ceiling mounting.

Technical data

Model	Frequency [Hz]	Voltage [V]	Power Consumption [W]	Current [A]	Maximum air capacity [m³/h]	Sound Pressure Level [dBA]*	Weight, kg	IP
VENTS Quiet-S 100	50	220-240	7.5	0.049	99	24	0.58	IP45
VENTS Quiet-S 100 (220 V/60 Hz)	60	220						

*Sound pressure level measured in free space at a distance of 3 meters from the fan.

Aerodynamic characteristics

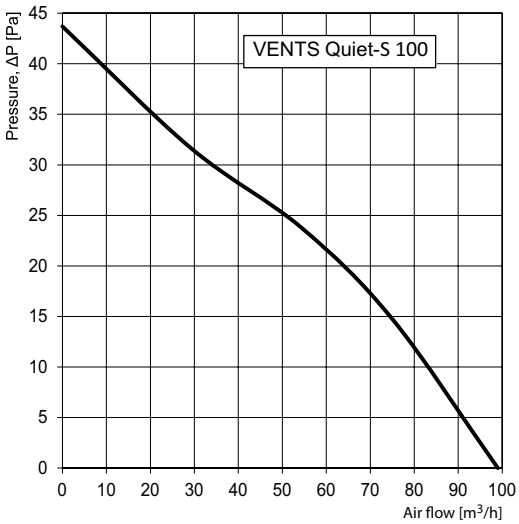

Overall dimensions

Model	Dimensions [mm]			
	Ø D	B	L	L1
VENTS Quiet-S 100	99	175	81	42

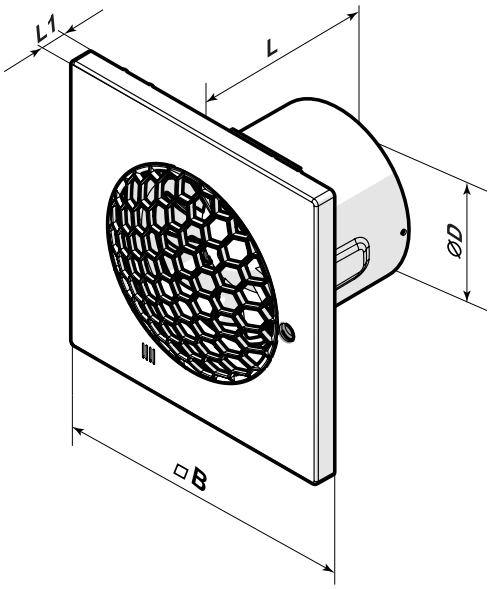

Certificates

IP45

The fans meet the applicable safety and electromagnetic compatibility standards.

VENTS Quiet-Disc Series



Intellectual axial low-noise and energy-saving fan for exhaust ventilation with air flow up to 370 m³/h

Application

- Innovative exhaust fan with stylish design for new comfort level in shower rooms, bathrooms, kitchens and other residential premises.
- Maximum air flow combined with low noise level provide the ideal microclimate.
- Mounting into ventilation shafts or connection to Ø 100, 125, 150 mm.

Design

- Casing and impeller made of high-quality and durable UV-resistant plastic.
- Specially designed impeller aerodynamic profile provides high air flow and low noise.
- The compact design enables wall and ceiling mounting.
- The shortened spigot for mounting into a ventilation shaft or connection to Ø 100, 125, 150 mm air ducts.
- The fan is equipped with a specially designed back valve to prevent back flow and heat losses during the fan standby.
- The fan exhaust spigot incorporates specially designed air rectifiers to reduce air turbulence, increase air pressure and lower noise level.
- High ingress protection rating makes the fan the ideal solution for ventilation of a bathroom. The electronic components are protected with tight covers. The VENTS Quiet-Disc 150 and VENTS Quiet-Disc Extra 150 models are additionaly equipped with a special vibration absorbing sealer along the fan countour.

Motor

- Low energy demand from 7.5 W due to new high-efficient motor.
- Maintenance-free bearings contain enough grease for 40 000 hrs non-stop operation.
- Motor on special anti-vibration dampers for vibration absorption and silent operation.
- Motor equipped with overheating protection.
- The VENTS Quiet-Disc 150 is supplied with a two-speed motor. The VENTS Quiet-Disc Extra 150 is supplied with a two-speed high powered motor.

Modifications and Options

Quiet-Disc Extra – high-powered motor.

Quiet-Disc T – turn-off delay timer modification with operating time from 2 to 30 min.

Quiet-Disc TH – turn-off delay timer modification with operating time from 2 to 30 min and a humidity sensor with threshold from 60 to 90 %.

Quiet-Disc V – pull-cord switch modification.

Quiet-Disc VT – modification with a pull-cord switch and a turn-off delay timer with operating time from 2 to 30 min.

Quiet-Disc VTH – modification with a pull-cord switch, a turn-off delay timer with operating time from 2 to 30 min and a humidity sensor with threshold from 60 to 90 %.

Quiet-Disc TP – modification with a turn-off delay timer with operating time from 2 to 30 min and a motion sensor; reach distance up to 4 m, viewing angle up to 100°.

* The VENTS Quiet-Disc 150 models with the T/TP/VT/VTH modifications are additionaly supplied with a turn-on delay timer adjustable from 0 up to 2 minutes.

VENTS Quiet-Disc 150 and VENTS Quiet-Disc Extra 150 operation modes

Operation modes of the fans models VENTS Quiet-Disc 150 and VENTS Quiet-Disc Extra 150 with modifications T, TH, VT, VTH, TP are selected by setting the DIP switch into the required position.

Mode 1 (single-speed mode)

- The fan is turned off by default. The fan starts operating at the 1st speed when the switch is closed or one of the sensors is activated.

Mode 2 (single-speed mode)

- The fan is turned off by default. The fan starts operating at the 2nd speed when the switch is closed or the sensors are activated.

Mode 3 (two-speed mode)

- The fan operates at the 1st speed by default. The fan switches to the 2nd speed when the switch is closed or the sensors are activated.

Mode 4 (two-speed mode)

- The fan is turned off by default. The fan starts operating at the 1st speed when the switch is closed and switches to the 2nd speed when the humidity sensor is activated.

Mode 5 (two-speed mode)

- The fan is turned off by default. The fan starts operating at the 1st speed when the switch is closed or when the humidity sensor is activated. If during the operation at the 1st speed the second even takes place. i.e. the switch is closed or the humidity sensor is activated, the fan switches to the 2nd speed.

Control

Manual control:

- Manual control with a room light switch. The switch is not included in the delivery set.
- The fan is controlled by the built-in pull cord switch **V**. Not applied in case of ceiling mounting.
- Speed control is possible through a thyristor speed controller or through a P2-1-300 speed switch (only for VENTS Quiet-Disc 150 models), see Electrical Accessories. Several fans may be connected to the same controller. Speed controllers can not be connected to the fans with the T, TH, TP, VT, VTH modifications.

Automatic control:

- By the electronic control unit **BU-1-60** (see Electrical Accessories). The control unit is supplied separately.
- By the timer **T** (the built-in turn-off delay timer enables the fan operation within 2 to 30 minutes after the fan switching off).
- By the humidity sensor and timer **TH** (if the humidity level in the room exceeds the sensor threshold within 60-90 % the fan switches automatically on and operates until the humidity level drops to the standard level, after that the fan continues operating within the set time period and shuts down).
- By the motion sensor and timer **TP** (if motion is detected in the reach area, the fan is switched automatically and operates within the set time period from 2 to 30 min). Reach distance up to 4 m, the max. viewing angle 100°.

Mounting features

- Installation directly inside a ventilation shaft.
- Flexible air ducts may be used in case of remote location of the ventilation shaft. Connection of the air duct to the exhaust flange with a clamp.
- Wall mounting with screws.
- Suitable for ceiling mounting.

Colour modifications


Quiet-Disc 100/125/150 Red


Quiet-Disc 100/125/150 Vintage


Quiet-Disc 100/125/150 Chrome


Quiet-Disc 100/125/150 Black Sapphire

Technical data

Model	Speed	Frequency [Hz]	Voltage [V]	Power consump-tion [W]	Current [A]	Maximum air flow [m³/h]	Sound Pressure Level [dBA]*	Weight [kg]	IP
VENTS Quiet-Disc 100	–	50	220-240	7.5	0.049	97	25	0.55	IP45
VENTS Quiet-Disc 100 (220 V/60 Hz)		60	220						
VENTS Quiet-Disc 125	–	50	220-240	17	0.11	185	32	0.78	
VENTS Quiet-Disc 125 (220 V/60 Hz)		60	220						
VENTS Quiet-Disc 150	max.	50/60	220-240	19	0.09	315	33	1.33	IP45
	min.			17	0.08	220	28		
VENTS Quiet-Disc Extra 150	max.	50/60	220-240	22	0.1	370	38	1.33	
	min.			19	0.09	280	32		

*Sound pressure level measured in free space at a distance of 3 meters from the fan.

Aerodynamic characteristics

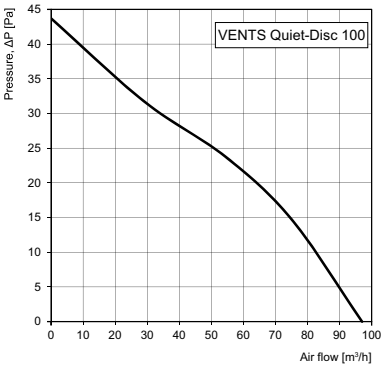

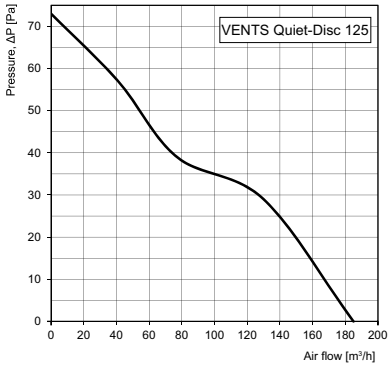

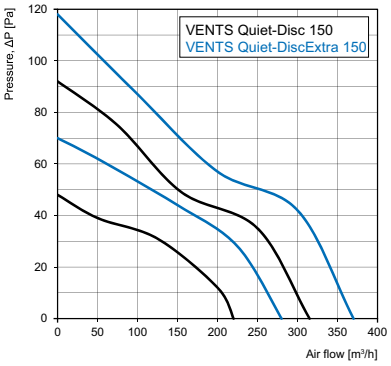

Overall dimensions

Model	Dimensions [mm]			
	Ø D	B	L	L1
VENTS Quiet-Disc 100	99	158	81	26
VENTS Quiet-Disc 125	123.5	182	91	27
VENTS Quiet-Disc 150	147.5	214	111	32
VENTS Quiet-Disc Extra 150				

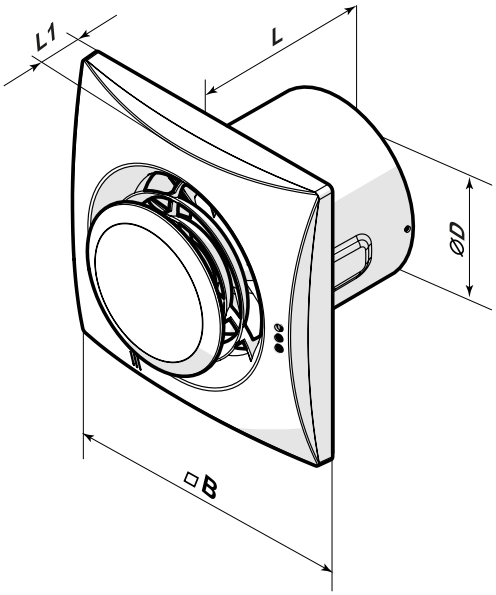

Certificates

IP45

The fans meet the applicable safety and electromagnetic compatibility standards.

VENTS Quiet Duo
Series



Two-speed axial low-noise and low energy fans for exhaust ventilation with the capacity up to 170 m³/h

Application

- Innovative exhaust fan with stylish design.
- Ideal for intermittent or continuous ventilation of bathroom, showers, kitchens and other utility spaces.
- Two-speed ventilation up to 170 m³/h.
- Permanent low-speed operation mode ensures continuous minimum air exchange in the room.
- Mounting into ventilation shafts or connection to Ø 100 mm and 125 mm air ducts.

Design

- The casing and the impeller are made of high-quality and durable UV-resistant plastic.
- The specially designed aerodynamic profile of the mixed-flow impeller provides high air flow combined with low-noise operation.
- The compact design enables wall and ceiling installation.
- A shortened spigot for mounting into a ventilation shaft or direct connection to Ø 100 mm and 125 mm air duct.
- The fan is equipped with a specially designed back valve to prevent back flow and heat losses during the fan standby.
- The fan exhaust spigot incorporates specially designed air rectifiers to reduce air turbulance, noise level and boost air pressure.
- High ingress protection rating makes the fan the ideal solution for bathroom ventilation. The electronic components are protected with tight covers.

Motor

- Low energy demand from 4 W due to a new two-speed high-efficient motor.
- Maintenance-free bearings contain enough grease for 40 000 hrs non-stop operation.
- Motor on special anti-vibration dampers for vibration absorbing and silent operation.
- Motor equipped with overheating protection.

Modifications and Options*

Quiet Duo V: modification with a pull cord switch.

Quiet Duo T: modification with a turn-off delay timer and inverval timer – integrated function of automatic ventilation activation.

Once in 6, 14 or 24 hours the fan is switched on for up to 30 min to ventilate a premise with the low speed. On elapsing of the set run-out time the fan switches off automatically.

Quiet Duo TH: off-delay timer modification with a turn-off delay from 2 to 30 min and humidity sensor with an adjustable thres-hold from 60 to 90 %.

* VENTS Quiet 100 Duo and VENTS Quiet 125 Duo with modifications T and TH are supplied with an integrated switch delay timer to avoid the fan unnecessary switching if you use your bathroom shortly and frequently. After humidity increases or after signalling from the external switch, the fan switches to higher speed not immediately, but after the set timer countdown (1 min).

Operation modes of the fans with modifications T, TH:

The fan operates at the low speed by default. The fan switches to the high speed when the switch is closed or the humidity sensor is activated.

Control

Manual control:

- Manual control with a room light switch. The switch is not included in the delivery set.

The fan is controlled by the built-in pull cord switch **V**. Not applied in case of ceiling mounting.

Speed control with the thyristor speed controller or speed switch P2-1-300, see Electrical Accessories. Several fans may be connected to the same controller. Speed controllers are not compatible with the fans with T, TH modification.

Automatic control:

- By the electronic control unit **BU–1–60** (see Electrical Accessories). The control unit is supplied separately.
- By the timer **T**. The built-in turn-off delay timer enables the fan operation at the high speed within 2 to 30 minutes after the fan switching off.
- By the humidity sensor and timer **TH**. If the humidity level in the room exceeds the sensor threshold within 60-90 % the fan switches automatically to the high speed and operates until the humidity level drops to the standard level. After that the fan continues operating within the set time period and then reverts to the standard operation mode with the low speed.

Mounting features

- Installation directly inside a ventilation shaft.
- Flexible air ducts may be used in case of remote location of the ventilation shaft. The air duct is connected to the exhaust spigot with a fixing clamp.
- Wall mounting with screws.

Colour modifications


Quiet 100/125 Duo
Red RAL 3013


Quiet 100/125 Duo
Vintage


Quiet 100/125 Duo
Chrome


Quiet 100/125 Duo
Black sapphire

Aerodynamic characteristics

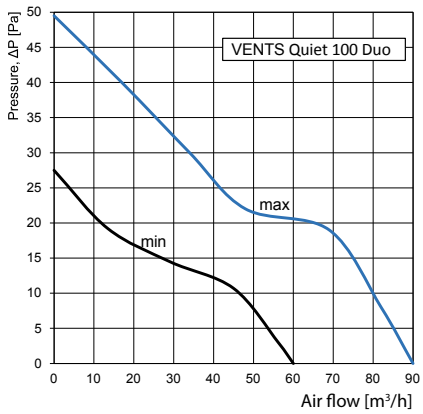

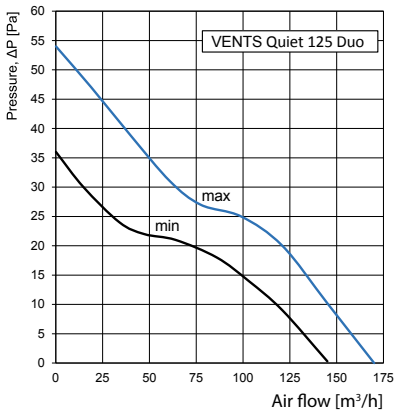

Technical data

Model	Speed	Frequency [Hz]	Voltage [V]	Power consumption [W]	Current [A]	Maximum air capacity [m³/h]	Sound Pressure Level [dBA]*	Weight [kg]	IP
VENTS Quiet 100 Duo	max	50	220-240	4	0.029	60	22	0.55	IP45
	min			7.5	0.052	90	25		
VENTS Quiet 125 Duo	max	50	220-240	9.5	0.065	145	28	0.78	IP45
	min			13.5	0.09	170	32		

*Sound pressure level measured in free space at a distance of 3 meters from the fan.

Overall dimensions

Model	Overall dimensions [mm]			
	Ø D	B	L	L1
VENTS Quiet 100 Duo	99	158	81	26
VENTS Quiet 125 Duo	123.5	182	91	27

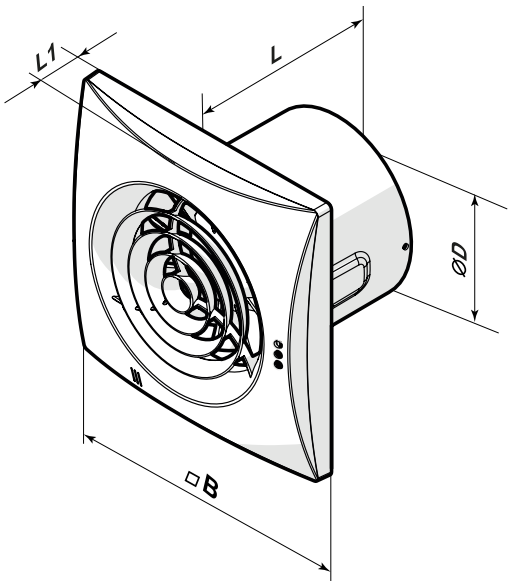

Certificates

IP45

The fans meet the applicable safety and electromagnetic compatibility standards.

Vents Quiet-Mild Series



Innovative axial low-noise and energy-saving fans for exhaust ventilation with air flow up to 370 m³/h

Applications

- Innovative exhaust fan with stylish design for new comfort level in shower rooms, bathrooms, kitchens and other residential premises.
- Maximum air flow combined with low noise level provide the ideal microclimate.
- Mounting into ventilation shafts or connection to Ø 100, 125, 150 mm.

Design

- Casing and impeller made of high-quality and durable UV-resistant plastic.
- Specially designed impeller aerodynamic profile provides high air flow and low noise.
- The shortened spigot for mounting into a ventilation shaft or connection to Ø 100, 125, 150 mm air ducts.
- The fan is equipped with a specially designed back valve to prevent back flow and heat losses during the fan standby.
- The fan exhaust spigot incorporates specially designed air rectifiers to reduce air turbulence, increase air pressure and lower noise level.
- High ingress protection rating makes the fan the ideal solution for ventilation of a bathroom.
- The electronic components are protected with tight covers.
- The fans VENTS 150 Quiet-Mild and VENTS 150 Quiet-Mild Extra are additionaly equipped with a special vibration absorbing sealer along the fan countour.

Motor

- Reliable ball bearing motor with low energy demand from 7.5 W.
- Maintenance-free bearings contain enough grease for 40 000 hrs non-stop operation.
- The motor rests on rubber anti-vibration connectors to ensure low-noise operation of the fan.
- The motor is equipped with overheating protection.
- Vents 150 Quiet-Mild model is equipped with a two speed motor. Vents 150 Quiet-Mild Extra model is equipped with a two speed high-powered motor.

Modifications and options

Quiet–Mild Extra – modification with a high-powered motor.

Quiet–Mild T – turn-off delay timer modification (from 2 to 30 min).

Quiet–Mild TH – turn-off delay timer modification (from 2 to 30 min) and humidity sensor with set point from 60 to 90 %.

Quiet–Mild V – pull-cord switch modification.

Quiet–Mild VT – modification with pull-cord switch and turn-off delay timer (from 2 to 30 min).

Quiet–Mild VTH – modification with pull-cord switch, turn-off delay timer (from 2 to 30 min) and humidity sensor with set point from 60 to 90 %.

Quiet–Mild TP – modification with turn-off delay timer (from 2 to 30 min) and motion sensor (reach distance from 1 to 4 m, viewing angle up to 100°).

* Models VENTS 150 Quiet-Mild with modification T/TP/VT/VTH additionaly supplied with turn-on delay timer adjustable from 0 to 2 minutes.

Operation modes of fans 150 Quiet–Mild and 150 Quiet–Mild Extra

Operation modes for T modifications of VENTS 150 Quiet-Mild / VENTS 150 Quiet-Mild Extra models are selected by setting the switch.

Mode 1 (single–speed mode)

- The fan is turned off by default. The fan starts operating at the low speed when the switch is closed or the sensors are activated.

Mode 2 (single–speed mode)

- The fan is turned off by default. The fan starts operating at the high speed when the switch is closed or the sensors are activated.

Mode 3 (two–speed mode)

- The fan operates at the low speed by default. The fan switches to the high speed when the switch is closed or the sensors are activated.

Mode 4 (two–speed mode)

- The fan is turned off by default.
- The fan starts operating at the low speed when the switch is closed. The fan switches to the high speed when the humidity sensor is activated.

Mode 4 (two–speed mode)

- The fan is turned off by default. The fan starts operating at the low speed when the switch is closed or the humidity sensor is activated. If during the operation at the low speed the switch is closed or the humidity sensor is activated, the fan switches to the high speed.

Control

Manual control:

- Manual control with a room light switch. The switch is not included in the delivery set.
- The fan is controlled by the built-in pull cord switch V. Not applied in case of ceiling mounting.
- Speed control is performed with a thyristor speed controller or with P2-1-300 speed switch (only for fans VENTS 150 Quiet-Mild and VENTS 150 Quiet-Mild Extra), see Electrical Accessories. Speed controllers can not be connected to the fans with T, TH, VT, VTH modification.

Automatic control:

- By the electronic control unit **BU–1–60** (see Electrical Accessories). The control unit is supplied separately.
- By the timer **T** (the built-in turn-off delay timer enables the fan operation within 2 to 30 minutes after the fan switching off).
- By the humidity sensor and timer **TH** (if the humidity level in the room exceeds the sensor set value within 60-90 % the fan switches automatically on and operates until the humidity level drops to the standard level, after that the fan continues operating within the set time period and shuts down).
- By the motion sensor and timer **TP** (if motion is detected in the reach area, the fan is switched automatically and operates within the set time period from 2 to 30 min. Reach distance up to 4 m, the max. viewing angle 100°).

Mounting features

- Installation directly inside a ventilation shaft.
- Flexible air ducts may be used in case of remote location of the ventilation shaft. Connection of the air duct to the exhaust flange with a clamp.
- Wall mounting with screws.
- Suitable for ceiling mounting.

Colour modifications



100/125/150 Quiet-Mild red RAL 3013



100/125/150 Quiet-Mild vintage



100/125/150 Quiet-Mild alu lak



100/125/150 Quiet-Mild chrome



100/125/150 Quiet-Mild black sapphire

Technical data

Model	Speed	Frequency [Hz]	Voltage [V]	Power consumption [W]	Current [A]	Maximum air flow [m³/h]	Sound pressure level at 3 m [dBA]	Weight [kg]	Electrical protection class
VENTS 100 Quiet-Mild	–	50	220-240	7.5	0.049	97	25	0.55	IP45
VENTS 100 Quiet-Mild (220-240 V / 60 Hz)		60							
VENTS 125 Quiet-Mild	–	50	220-240	17	0.11	185	32	0.78	
VENTS 125 Quiet-Mild (220-240 V / 60 Hz)		60							
VENTS 150 Quiet-Mild	max.	50/60	220-240	19	0.09	315	33	1.33	IP45
	min.			17	0.08	220	28		
VENTS 150 Quiet-Mild Extra	max.	50/60	220-240	22	0.1	370	38	1.33	
	min.			19	0.09	280	32		

Aerodynamic characteristics

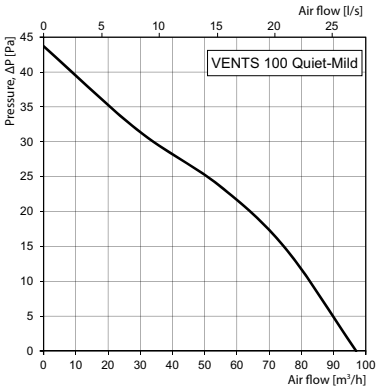

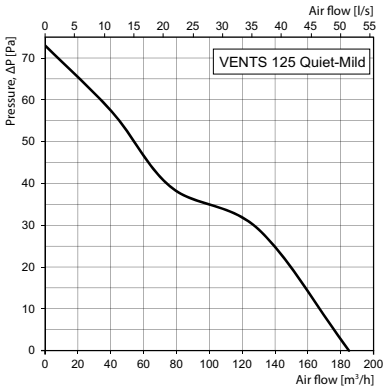

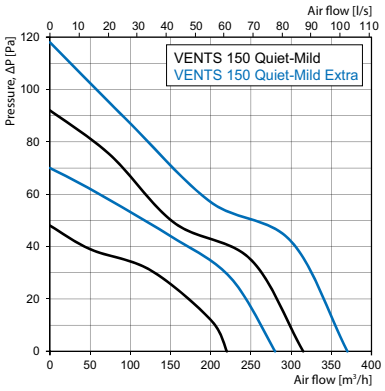

Overall dimensions

Model	Dimensions [mm]			
	Ø D	B	L	L1
VENTS 100 Quiet-Mild	99	158	81	26
VENTS 125 Quiet-Mild	123.5	182	91	27
VENTS 150 Quiet-Mild	147.5	214	111	32
VENTS 150 Quiet-Mild Extra				

Certificates

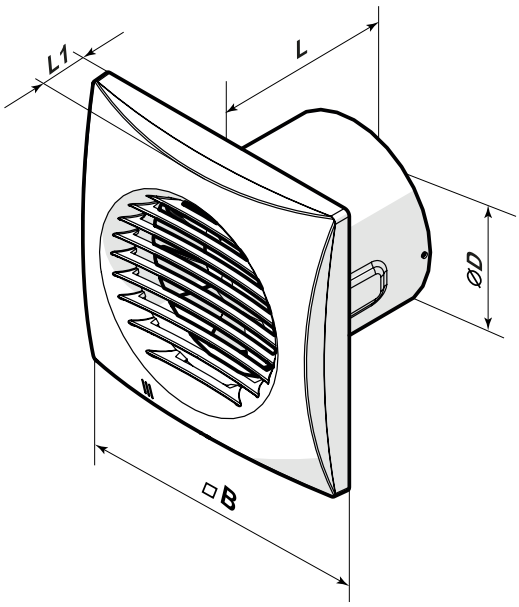

IP45 The fans meet the applicable safety and electromagnetic compatibility standards.

VENTS Silenta-M Series



Low-noise and low-watt axial fans for exhaust ventilation with air flow up to 242 m³/h

Application

- Continuous or periodic exhaust ventilation of bathroom, showers, kitchens and other utility spaces.
- Ventilation of premises with high noise level limitations.
- Ventilation shaft mounting or duct connection.
- Compatible with Ø 100, 125 and 150 mm air ducts.

Design

- Modern design and aesthetic look.
- The casing and the impeller are made of high-quality durable ABS plastic, UV resistant.
- The intellectual impeller design makes the fan efficiency high and the service life long.
- The fan and motor are specially designed for silent operation.
- Protection rating IP34.

Motor

- Reliable motor with the minimum power consumption 7 W (for 100 mm diameter).
- Designed for continuous operation and requires no maintenance.
- Equipped with overheating protection.

Modifications and Options

Silenta-M K – fan is equipped with a backdraft damper for back flow preventing.

Silenta-M L – the motor is equipped with ball bearings for long service life (appr. 40 thousand hours) and fan mounting at any angle. The bearings are maintenance-free and contain enough grease for the entire operating period.

Silenta-MT – equipped with a regulated timer with the operating time from 2 to 30 minutes.

Silenta-MTH – equipped with a timer with the operating time from 2 to 30 minutes and a humidity sensor with the threshold value from 60 to 90 %.

Silenta-MV – equipped with a pull cord switch.

Silenta-MVT – equipped with a pull cord switch and a regulated timer with the operating time adjustable from 2 to 30 minutes.

Silenta-MVTH – equipped with a pull cord switch, regulated timer with the operating time adjustable from 2 to 30 minutes and a humidity sensor with the operating threshold range from 60 to 90 %.

Silenta-MTP – equipped with a regulated timer and a motion sensor with the sensitivity area from 1 to 4 m and the detection angle up to 100°.

Control

Manual:

- The fan is controlled by a room light switch. It is not included in the delivery package.
- The fan is controlled by the built-in pull cord switch **V.** Not applied in case of ceiling mounting.
- Speed control is possible through a thyristor speed controller (see Electrical Accessories). Several fans may connected to the same controller. Speed controllers can not be connected to the fans with T, TH, TP, VT, VTH modification.

Automatic:

- By the electronic control unit **BU-1-60** (see Electrical Accessories). The control unit is supplied separately.
- By the timer **T** (the built-in turn-off delay timer enables the fan operation within 2 to 30 minutes after the fan switching off).
- By the humidity sensor and timer **TH** (if the humidity level in the room exceeds the sensor threshold adjustable value within 60-90 % the fan switches automatically on and operates until the humidity level drops to the standard level, after that the fan continues operating within the time period according to the timer setting, then shuts down).
- By the motion sensor and the timer **TP** (in case of motion detection the fan switches automatically on and operates within the set time period from 2 to 30 minutes. The motion sensitivity area is up to 4 meters and the maximum detection angle is 100°).

Mounting features

- The fan is mounted directly into the ventilation shaft.
- Flexible duct application is recommended in case of remote location of the ventilation shaft. The air duct is connected to the fan exhaust flange through a clamp.
- Fixed to wall by self-tapping screws.
- Suitable for ceiling mounting.

Accessories

Air ducts | Grilles and hoods | Backdraft damper | Speed controllers | Clamps



Aerodynamic characteristics

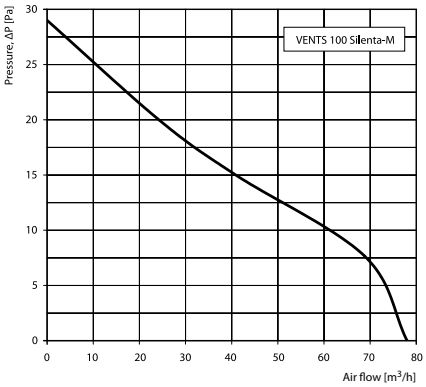

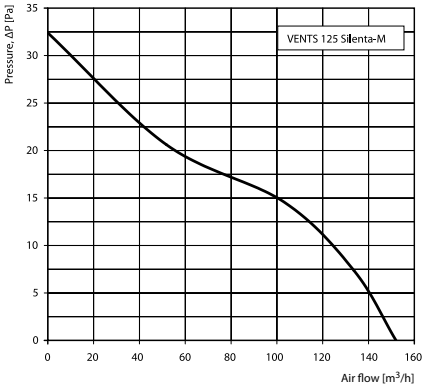

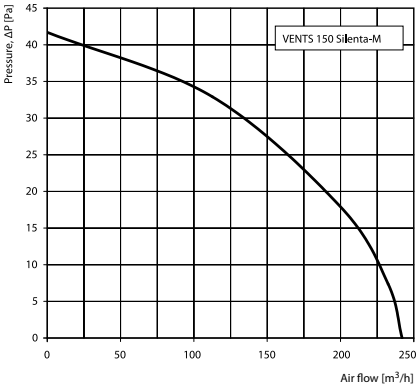

Technical data

Model	Frequency [Hz]	Voltage [V]	Power Consumption [W]	Current [A]	Maximum air capacity [m³/h]	Sound Pressure Level [dBA]*	Weight, kg
VENTS 100 Silenta-M	50/60	220-240	7	0.035	78	26	0.48
VENTS 125 Silenta-M	50/60	220-240	9.1	0.059	152	31	0.63
VENTS 150 Silenta-M	50	220-240	20	0.14	242	33	0.82
VENTS 150 Silenta-M (220 V/60 Hz)	60	220					

*Sound pressure level measured in free space at a distance of 3 meters from the fan.

Overall dimensions

Model	Dimensions [mm]				
	Ø D	B	H	L	L1
VENTS 100 Silenta-M	100	159	135	89	23
VENTS 125 Silenta-M	125	180	150	94	25
VENTS 150 Silenta-M	150	206	182	106	26

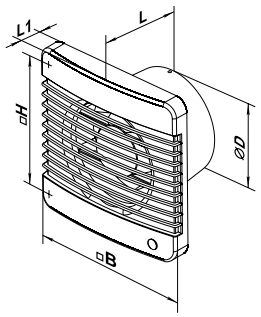

Mounting example



Certificates

IP34

The fans meet the applicable safety and electromagnetic compatibility standards.

VENTS Silenta-S Series



Low noise and low watt axial fans for exhaust ventilation with the capacity up to 240 m³/h

Application

- Continuous or periodic exhaust ventilation of bathroom, showers, kitchens and other utility spaces.
- Ventilation of premises with high noise level limitations.
- Ventilation shaft mounting or duct connection.
- Compatible with Ø 100, 125 and 150 mm air ducts.

Design

- Modern design and aesthetic look.
- The casing and the impeller are made of high-quality durable ABS plastic, UV resistant.
- The intellectual impeller design makes the fan efficiency high and the service life long.
- The fan and motor are specially designed for silent operation.
- Insect screen.
- Protection rating IP34.

Motor

- Reliable motor with the minimum power consumption 7 W (for 100 mm diameter).
- Designed for continuous operation and requires no maintenance.
- Equipped with overheating protection.

Modifications and Options

Silenta-S K – fan is equipped with a backdraft damper for back flow preventing.

Silenta-S L – The motor is equipped with ball bearings for long service life (appr. 40 thousand hours) and fan mounting at any angle. The bearings are maintenance-free and contain enough grease for the entire operating period.

Silenta-ST – equipped with a regulated timer with the operating time from 2 to 30 minutes.

Silenta-STH – equipped with a timer with the operating time from 2 to 30 minutes and a humidity sensor with the threshold value from 60 to 90 %.

Silenta-SV – equipped with a pull cord switch.

Silenta-SVT – equipped with a pull cord switch and a regulated timer with the operating time adjustable from 2 to 30 minutes.

Silenta-SVTH – equipped with a pull cord switch, regulated timer with the operating time adjustable from 2 to 30 minutes and a humidity sensor with the operating threshold range from 60 to 90 %.

Control

Manual:

- The fan is controlled by a room light switch. It is not included in the delivery package.
- The fan is controlled by the built-in pull cord switch **V**. Not applied in case of ceiling mounting.
- Speed control is possible through a thyristor speed controller (see Electrical Accessories). Several fans may connected to the same controller. Speed controllers can not be connected to the fans with T, TH, TP, VT, VTH modification.

Automatic:

- By the electronic control unit **BU-1-60** (see Electrical Accessories). The control unit is supplied separately.
- By the timer **T** (the built-in turn-off delay timer enables the fan operation within 2 to 30 minutes after the fan switching off).
- By the humidity sensor and timer **TH** (if the humidity level in the room exceeds the sensor threshold adjustable value within 60-90 % the fan switches automatically on and operates until the humidity level drops to the standard level, after that the fan continues operating within the time period according to the timer setting, then shuts down).

Mounting features

- The fan is mounted directly into the ventilation shaft.
- Flexible duct application is recommended in case of remote location of the ventilation shaft. The air duct is connected to the fan exhaust flange through a clamp.
- Fixed to wall by self-tapping screws.
- Suitable for ceiling mounting.

Accessories

Air ducts | Grilles and hoods | Backdraft damper | Speed controllers | Clamps



Aerodynamic characteristics

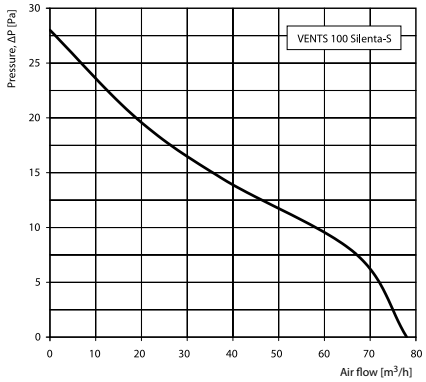

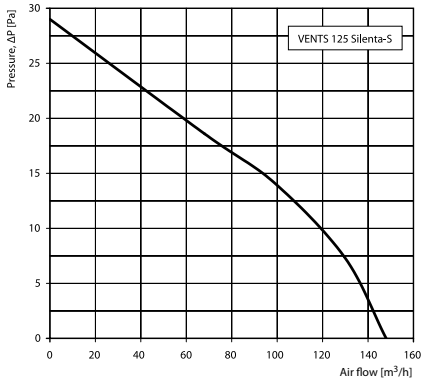

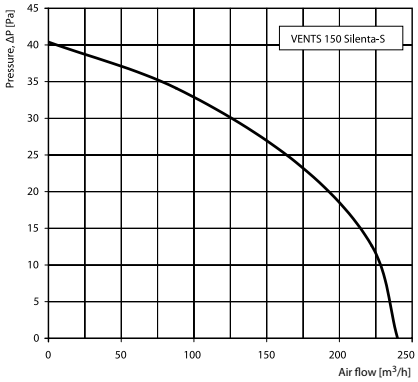

Technical data

Model	Frequency [Hz]	Voltage [V]	Power Consumption [W]	Current [A]	Maximum air capacity [m³/h]	Sound Pressure Level [dBA]*	Weight, kg
VENTS 100 Silenta-S	50/60	220-240	7	0.035	78	26	0.52
VENTS 125 Silenta-S	50/60	220-240	9.3	0.06	148	31	0.69
VENTS 150 Silenta-S	50	220-240	20	0.14	240	33	0.85
VENTS 150 Silenta-S (220 V/60 Hz)	60	220					

*Sound pressure level measured in free space at a distance of 3 meters from the fan.

Overall dimensions

Model	Dimensions [mm]				
	Ø D	B	H	L	L1
VENTS 100 Silenta-S	100	150	120	108	12
VENTS 125 Silenta-S	125	176	140	114	13
VENTS 150 Silenta-S	150	205	165	132	14

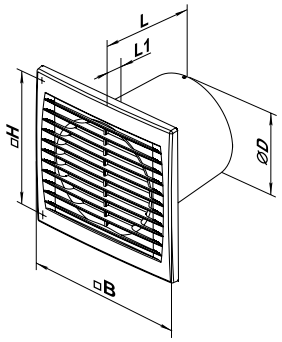

Mounting example



Certificates

IP34

The fans meet the applicable safety and electromagnetic compatibility standards.

VENTS Style Series



Innovative domestic extract fan with automatic shutters, low-noise operation and low energy consumption with the capacity of up to 97 m³/h

Application

- Innovative extract fan with stylish design for enhanced comfort level in shower rooms, bathrooms, kitchens, and other residential premises.
- Maximum air flow combined with low noise level provide the ideal microclimate.
- Intermittent or continuous ventilation of bathrooms, shower rooms, kitchens and other utility spaces.
- Mounting into ventilation shafts or connection to Ø 100 mm air ducts.

Design

- The casing and the impeller are made of high-quality and durable UV-resistant plastic.
- Due to its modern look the fan is compatible with any interior design.
- Specially designed impeller aerodynamic profile provides high air flow and low noise.
- A shortened spigot for mounting into a ventilation shaft or direct connection to Ø 100 mm air ducts.
- The fan exhaust spigot incorporates specially designed air rectifiers to reduce air turbulence, noise level and boost air pressure.
- The removable ventilation unit enables easy maintenance.
- High ingress protection rating makes the fan an ideal bathroom ventilation solution. The electronic components are protected with tight covers.
- The integrated thermal actuator enables smooth opening and closing of the front panel to prevent backdrafting.

Motor

- Reliable ball bearing motor with low energy demand.
- Maintenance-free bearings contain enough grease for 40 000 hrs of non-stop operation.
- Motor on special anti-vibration dampers for vibration absorbing and silent operation.
- Motor equipped with electric overheating protection.

Modifications and options

VENTS 100 Style T: equipped with a non-adjustable turn-on delay timer (60 s), an adjustable turn-off delay timer (from 2 to 30 minutes), and an interval timer (from 6 to 24 hours).

VENTS 100 Style TH: equipped with a non-adjustable turn-on delay timer (60 s), an adjustable turn-off delay timer (from 2 to 30 minutes), and a humidity sensor adjustable from 60 % to 90 %.

Control

Manual

The fan is controlled by a room light switch (not included in the delivery set).

Automatic

- By the T timer. The built-in timer turns on the fan in 60 seconds after closing of the external switch and allows the fan to operate from 2 to 30 minutes after opening of the external switch. When the interval timer is activated, the fan will also turn on every 6, 12 or 24 hours depending on the selected interval and operate for the time specified by the turn-off delay timer (from 2 to 30 minutes).
- By the humidity sensor and the TH timer. If the humidity level in the room exceeds the sensor threshold (60-90 %), the fan will automatically turn on and continue running for 2-30 minutes (specified by the turn-off delay timer) after the humidity returns to normal levels. When the fan is turned on using the room light switch, it will turn on with a time delay of 60 s, and after opening the switch it will continue to operate for the time specified by the turn-off delay timer (from 2 to 30 minutes).

Design features

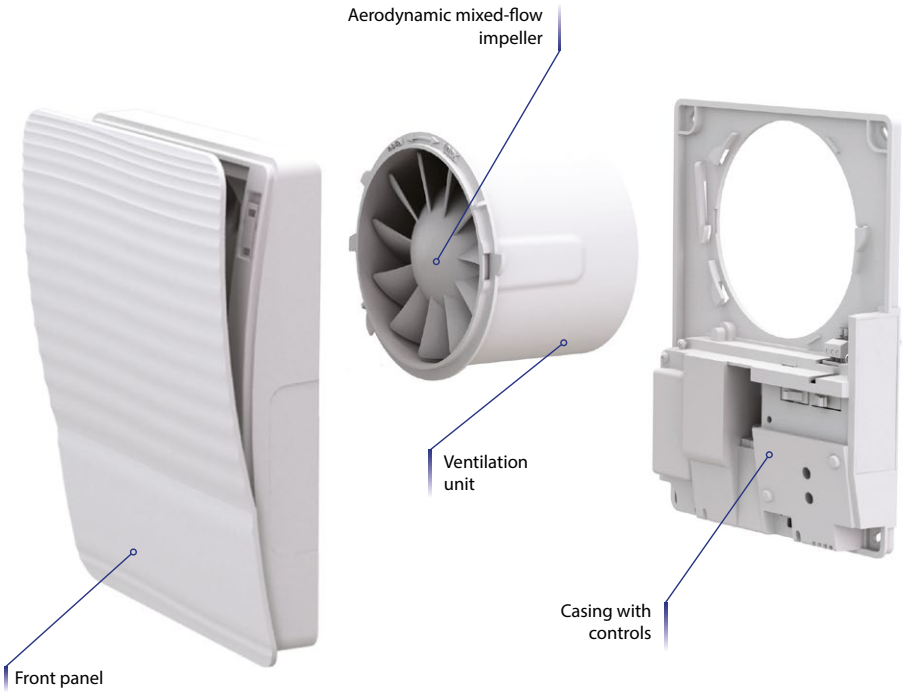

Accessories



Technical data

Model	Frequency [Hz]	Voltage [V]	Power consumption [W]	Current [A]	RPM [min^{-1}]	Maximum air flow [m^3/h]	Sound Pressure Level [dBA]*	Weight [kg]	IP
VENTS 100 Style	50	220-240	9	0.059	2165	97	25	0.55	42
VENTS 100 Style (220 V/60 Hz)	60	220							

*Sound pressure level measured in free space at a distance of 3 meters from the fan.

Aerodynamic characteristics

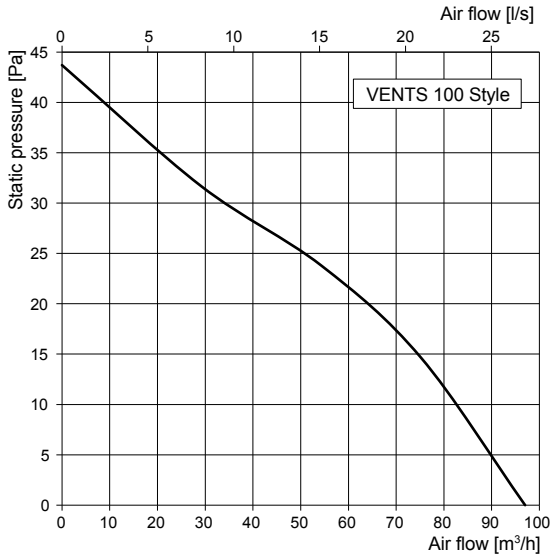

Overall dimensions

Model	Dimensions [mm]				
	a	b	c	Ø d	e
VENTS 100 Style	175	221	77	99	39

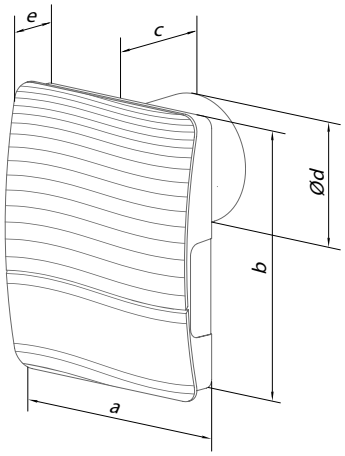

Mounting example



Certificates

CE IP42 The fans meet the applicable safety and electromagnetic compatibility standards.

VENTS Alta series



Fans with an innovative mixed flow impeller, with automatic louver shutters for exhaust ventilation with the air flow up to 90 m^3/h

Application

- Continuous or periodic exhaust ventilation of bathrooms, showers, kitchens and other residential premises.
- Mounting into ventilation shafts or connection to Ø 100 mm air ducts.

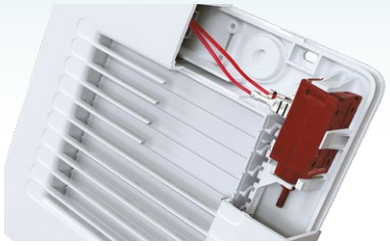

Fan not running – the shutters are CLOSED

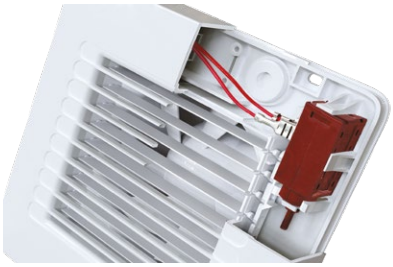

Fan running – the shutters are OPEN

Design

- Modern design and aesthetic look.
- The casing and the impeller are made of high-quality durable ABS plastic, UV resistant.
- The aerodynamic design of the impeller ensures high air flow and low noise level.
- The fan outlet spigot incorporates specially designed air rectifiers to reduce air turbulence, noise level and increase air pressure.
- The fan is equipped with a thermal actuator, which ensures smooth opening and closing of the automatic shutters preventing back draught.
- The ingress protection rating is IP24.

Motor

- Reliable motor with low power consumption.
- The motor is designed for continuous operation and requires no maintenance.
- The motor is protected against overheating.

Versions and options

The **Alta L** motor is equipped with ball bearings to maximize service life (approx. 40 000 operating hours) and to install the fan at any angle. The bearings are maintenance-free and have enough grease for their entire service life.

Alta T – equipped with a timer, adjustable from 2 up to 30 minutes.

Alta TH – equipped with a timer (adjustable from 2 up to 30 minutes) and a humidity sensor (activation threshold – 60-90%).

Alta V – equipped with a cord switch.

Alta VT – equipped with a cord switch and a timer (adjustable from 2 up to 30 minutes).

Alta VTH – equipped with a cord switch, a timer (adjustable from 2 up to 30 minutes) and a humidity sensor (response threshold – 60-90 %).

Alta 12 – modification with low-voltage motor. 12 V AC power supply.

Control

Manual

The fan is controlled with a light switch. The switch is not included in the delivery set.

- The fan is controlled by means of an integrated cord switch **B**. When the fan is ceiling mounted, this option is not used.

Automatic

- By means of an electronic control unit **BU-1-60** (see "Electrical accessories"). The control unit is supplied separately.
- By the **T** timer. The built-in adjustable turn-off delay timer allows the fan to run for 2 to 30 minutes after it is switched off.
- By the humidity sensor and the timer **TH**. If the humidity level in the room exceeds the sensor threshold within 60-90 %, the fan will automatically switch on and will continue running until the humidity returns to normal; then the fan will work the time set on the timer and will switch off.

Mounting features

- The fan is installed directly in the ventilation shaft opening.
- Flexible duct connection is recommended in case of the remote ventilation shaft location. The air duct is connected to the outlet flange of the fan with a clamp.
- It is fixed to the wall with screws.
- The fan on ball bearings (Alta L) may be used for ceiling installation.
- For 12 V low-voltage motor fan connection to 220 V/50 Hz power mains use the step-down transformer TRF 220/12-25 that is available upon separate order.

Accessories

Air ducts | Grilles and hoods | Regulators | Clamps



Technical data

Model	VENTS Alta 100	VENTS Alta 100-12
Frequency [Hz]	50	50
Voltage [V]	220-240	12
Power [W]	11	12
Current [A]	0.056	1.21
RPM [min^{-1}]	2300	2300
Maximum air flow [m^3/h]	90	90
Maximum air flow [l/s]	25	25
Sound pressure level [dBA*]	25	25
Weight [kg]	0.63	0.63
IP	IP24	IP24

*Sound pressure level measured in free space at a distance of 3 meters from the fan.

Aerodynamic characteristics

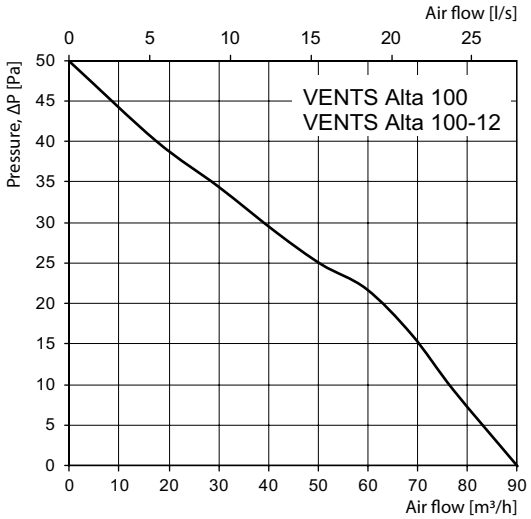

Installation example



Overall dimensions

Model	Dimensions [mm]			
	Ø D	□B	L	L1
VENTS Alta 100 VENTS Alta 100-12	99	168	110	29

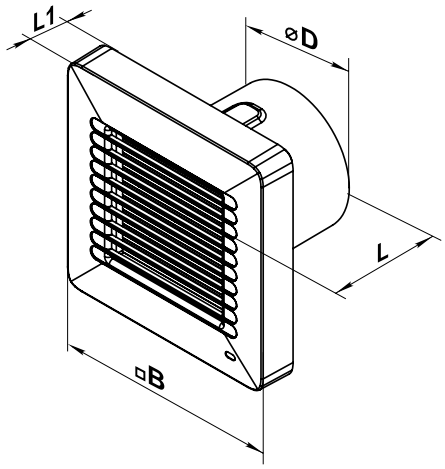

Certificates

IP 24 The fans comply with regulations on safety and electromagnetic compatibility.

VENTS Style
Duo Series



Innovative two-speed domestic extract fan with automatic shutters, low-noise operation and low energy consumption with the capacity of up to 90 m³/h

Application

- Innovative extract fan with stylish design for enhanced comfort level in shower rooms, bathrooms, kitchens, and other residential premises.
- Maximum air flow combined with low noise level provide the ideal microclimate.
- Intermittent or continuous ventilation of bathrooms, shower rooms, kitchens and other utility spaces.
- Mounting into ventilation shafts or connection to Ø 100 mm air ducts.

Design

- The casing and the impeller are made of high-quality and durable UV-resistant plastic.
- Due to its modern look the fan is compatible with any interior design.
- Specially designed impeller aerodynamic profile provides high air flow and low noise.
- A shortened spigot for mounting into a ventilation shaft or direct connection to Ø 100 mm air ducts.
- The fan exhaust spigot incorporates specially designed air rectifiers to reduce air turbulence, noise level and boost air pressure.
- High ingress protection rating makes the fan an ideal bathroom ventilation solution. The electronic components are protected with tight covers.
- The integrated thermal actuator enables smooth opening and closing of the front panel to prevent backdrafting.



Motor

- The motor is equipped with a new energy efficient two-speed ball bearing motor with low energy demand.
- Maintenance-free bearings contain enough grease for 40 000 hrs of non-stop operation.
- Motor on special anti-vibration dampers for vibration absorbing and silent operation.
- Motor equipped with electric overheating protection.

Modifications and options

VENTS 100 Style Duo T: equipped with a non-adjustable turn-on delay timer (60 s), an adjustable turn-off delay timer (from 2 to 30 minutes), and an interval timer (from 6 to 24 hours).

VENTS 100 Style Duo TH: equipped with a non-adjustable turn-on delay timer (60 s), an adjustable turn-off delay timer (from 2 to 30 minutes), and a humidity sensor adjustable from 60 % to 90 %.

Control

Manual:

- The fan is controlled by a room light switch (not included in the delivery set).

Automatic:

- By the T timer. The built-in timer switches the fan to high speed in 60 seconds after the external switch closes and allows it to operate at high speed for 2-30 minutes after the external switch opens. Then the fan returns to the previous operation mode. When the interval timer is activated, the fan will also turn on every 6, 12 or 24 hours depending on the selected interval and operate at the first speed for the time specified by the turn-off delay timer (from 2 to 30 minutes).
- By the humidity sensor and the TH timer. If the humidity level in the room exceeds the sensor threshold (60-90 %), the fan will automatically switch to high speed and continue running from 2 to 30 minutes (specified by the timer) after the humidity returns to normal levels. When the fan is turned on using the room light switch, it will turn on at low speed with a time delay of 60 s, and after opening the switch it will continue to operate for the time specified by the turn-off delay timer (from 2 to 30 minutes).



Accessories



Technical data

Model	Speed	Voltage [V/50 Hz]	Power consumption [W]	Current [A]	RPM [min^{-1}]	Maximum air flow [m^3/h]	Sound Pressure Level [dBA]*	Weight [kg]	IP
VENTS 100 Style Duo	min	220-240	6	0.039	1850	60	22	0.55	42
	max		8.5	0.063	2400	90	25		

*Sound pressure level measured in free space at a distance of 3 meters from the fan.

Design features

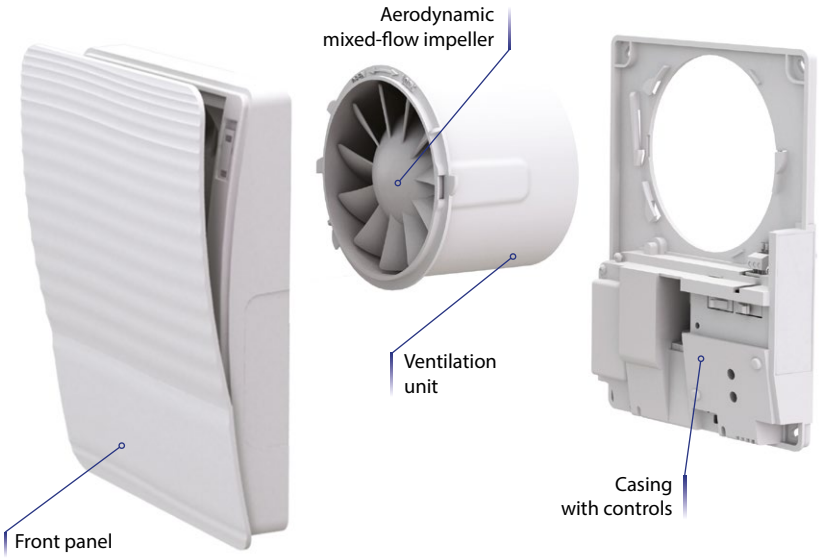

Aerodynamic characteristics

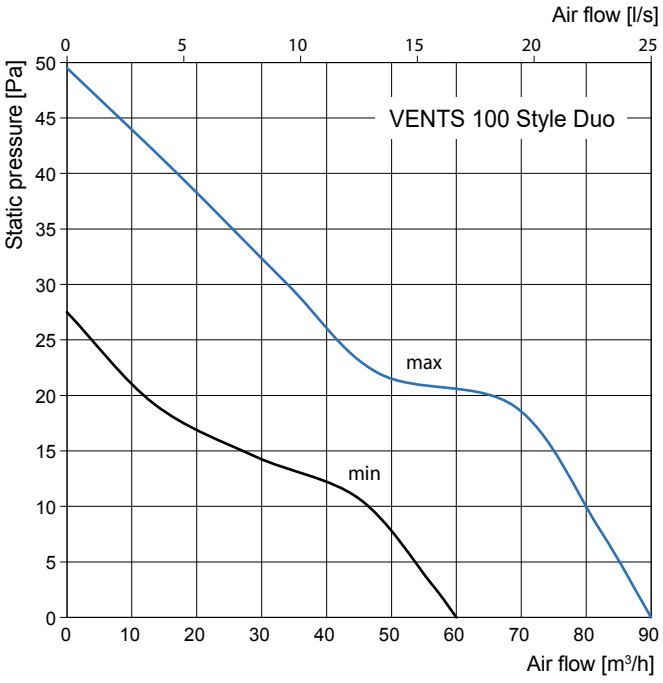

Overall dimensions

Model	Dimensions [mm]				
	a	b	c	Ø d	e
VENTS 100 Style Duo	175	221	77	99	39

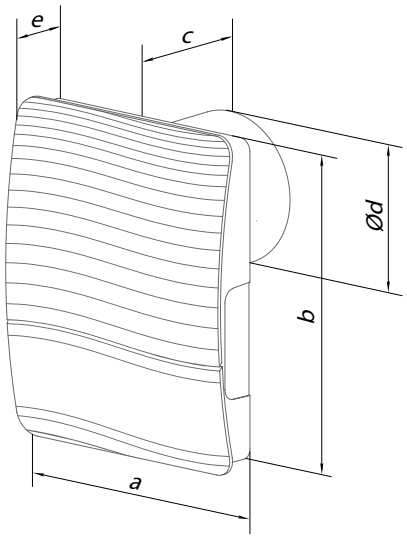

Certificates

IP42

The fans meet the applicable safety and electromagnetic compatibility standards.

Series
VENTS Solid



Low-noise and low-power extract axial fan with air flow up to 85 m³/h

Application

- Permanent or intermittent extract ventilation of shower rooms, bathrooms, kitchens and other residential premises
- Ventilation of premises with high requirements to noise level.
- Mounting into ventilation shafts or connection to Ø 100 mm air ducts.

Design

- Modern design and aesthetic look.
- The casing, the impeller and the front panel are made of high-quality and durable UV-resistant plastic.
- The specially designed aerodynamic profile of the mixed-flow impeller provides high air flow and pressure combined with low-noise operation.
- The fan is equipped with a specially designed backdraft damper to prevent back flow and heat losses during the fan standby.
- The fan exhaust spigot incorporates specially designed air rectifiers to reduce air turbulence, noise level and boost air pressure.

Motor

- Reliable motor with low energy demand.
- Rated for continuous operation and is completely maintenance-free.
- Integrated overheating protection.

Modifications and Options

Solid L: modification with a ball bearing motor for long service life (around 40 000 operating hours). Installation at any angle is possible. The ball bearings require no maintenance and are greased for the entire service life.

Solid T: modification with a regulated turn-off delay timer.

Solid T1: modification with a turn-on delay timer regulated from 10 seconds to 2 minutes and a turn-off delay timer regulated from 2 up to 30 minutes.

Solid TH: modification with a turn-off delay timer regulated from 2 up to 30 minutes and a humidity sensor regulated from 60 % up to 90 %.

Solid V: modification with a pull-cord switch.

Solid VT: modification with a pull-cord switch and a turn-off delay timer regulated from 2 up to 30 minutes.

Solid VTH: modification with a pull cord switch, turn-off delay timer regulated from 2 up to 30 mi-nutes and a humidity sensor regulated from 60 % up to 90 %.

Control

Manual control:

- Manual operation with a room light switch (not included in the delivery set).
- Operation with a built-in pull cord switch V. Not applicable in case of the ceiling mounting.

Automatic control:

- Control with the electronic control unit **BU–1–60** (see Electrical Accessories). The control unit is supplied separately.
- Control with the turn-off delay timer **T**. The built-in turn-off delay timer enables operation of the fan within 2 up to 30 minutes after turning the fan off with a switch.
- Control with the timer **T1**. After turning of the external switch the turn-on delay timer is activated for from 10 seconds to 2 minutes. The fan remains turned off. After the fan is turned off with the external switch the fan keeps running within 2 up to 30 minutes according to the settings of the turn-off delay timer.
- Control with the timer and humidity sensor **TH**. If the indoor humidity exceeds the set humidity point adjustable from 60 to 90 %, the fan switches automatically on and runs until the indoor humidity drops below the set humidity point. After that the fan continues running according to the timer settings and turns off.

Mounting features

- Direct installation inside a ventilation shaft.
- Flexible air ducts may be used in case of remote location of the ventilation shaft. The air duct is connected to the exhaust spigot with a fixing clamp.
- Wall mounting with screws.
- Suitable for ceiling mounting.

Colour modifications



Solid
Front panel in white, basic model



Solid Red
Front panel in red



Solid Black Sapphire
Front panel in black



Solid Dim
white matte front panel



Solid Alu
front panel with a stainless steel trim



Solid Chrome
front panel with a polished stainless steel trim

Accessories



Aerodynamic characteristics

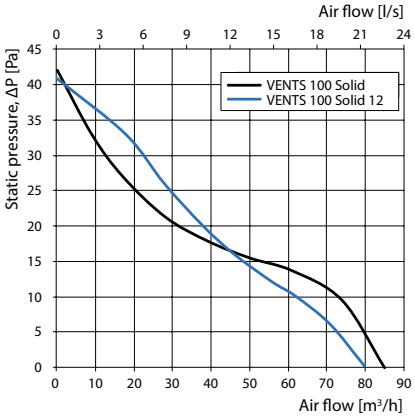

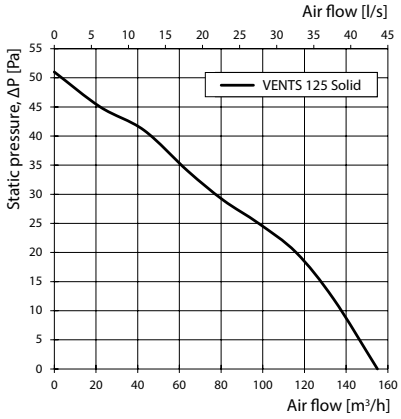

Overalldimensions

Model	Dimensions [mm]			
	Ø D	B	L	L1
VENTS 100 Solid	99.0	160	79	38
VENTS 125 Solid	123.5	180	85	38

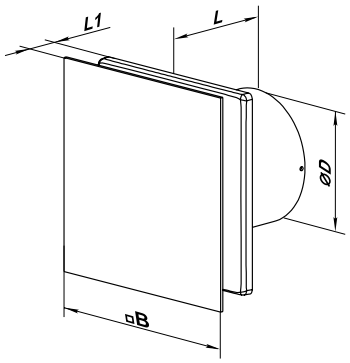

Technical data

Model	Frequency [Hz]	Voltage [V]	Power consumption [W]	Current [A]	RPM [min⁻¹]	Maximum air flow [m³/h]	Sound Pressure Level [dBA]*	Weight [kg]	IP
VENTS 100 Solid	50	220-240	8	0.05	2000	85	27	0.51	44
VENTS 100 Solid (220 V/60 Hz)	60	220							
VENTS 100 Solid 12	50	12	9	1.06	1950	80	26	0.51	44
VENTS 125 Solid	50	220-240	18	0.11	2200	155	32	0.75	44
VENTS 125 Solid (220 V/60 Hz)	60	220							

*Sound pressure level measured in free space at a distance of 3 meters from the fan.

Mounting example



IP44

The fans meet the applicable safety and electromagnetic compatibility standards.

Series
VENTS Solid Glass



Low-noise and low-power extract axial fan with air flow up to 85 m^3/h* suitable for use in Zone 1

Application

- Permanent or intermittent extract ventilation of shower rooms, bathrooms, kitchens and other residential premises.
- Ventilation of premises with high requirements to noise level.
- Mounting into ventilation shafts or connection to Ø 100 mm air ducts.

Design

- Additional rubber seal realized by two-component molding allows the fans to be used in Zone 1.
- Modern design and aesthetic look.
- The casing, the impeller and the front panel are made of high-quality and durable UV-resistant plastic.
- Advanced 7-blade aerodynamic profile of the mixed-flow impeller provides high air flow and pressure combined with low-noise operation.
- The fan is equipped with a specially designed backdraft damper to prevent back flow and heat losses during the fan standby.
- The fan exhaust spigot incorporates specially designed air rectifiers to reduce air turbulence, noise level and boost air pressure.

Motor

- Reliable motor with low energy demand.
- Rated for continuous operation and is completely maintenance-free.
- Integrated overheating protection.

Modifications and Options

Solid Glass L: modification with a ball bearing motor for long service life (around 40 000 operating hours). Installation at any angle is possible. The ball bearings require no maintenance and are greased for the entire service life.

Solid Glass T: modification with a regulated turn-off delay timer.

Solid Glass T1: modification with a turn-on delay timer regulated from 10 seconds to 2 minutes and a turn-off delay timer regulated from 2 up to 30 minutes.

Solid Glass TH: modification with a turn-off delay timer regulated from 2 up to 30 minutes and a humidity sensor regulated from 60 % up to 90 %.

Solid Glass V: modification with a pull-cord switch.

Control

Manual control:

- Manual operation with a room light switch (not included in the delivery set).
- Operation with a built-in pull cord switch V. Not applicable in case of the ceiling mounting.

Automatic control:

- Control with the electronic control unit **BU–1–60** (see Electrical Accessories). The control unit is supplied separately.
- Control with the turn-off delay timer **T**. The built-in turn-off delay timer enables operation of the fan within 2 up to 30 minutes after turning the fan off with a switch.
- Control with the timer **T1**. After turning of the external switch the turn-on delay timer is activated for from 10 seconds to 2 minutes. The fan remains turned off. After the fan is turned off with the external switch the fan keeps running within 2 up to 30 minutes according to the settings of the turn-off delay timer.
- Control with the timer and humidity sensor **TH**. If the indoor humidity exceeds the set humidity point adjustable from 60 to 90 %, the fan switches automatically on and runs until the indoor humidity drops below the set humidity point. After that the fan continues running according to the timer settings and turns off.

Mounting features

- Direct installation inside a ventilation shaft.
- Flexible air ducts may be used in case of remote location of the ventilation shaft. The air duct is connected to the exhaust spigot with a fixing clamp.
- Wall mounting with screws.
- Suitable for ceiling mounting.

Colour modifications



Solid Glass
front panel made of white natural glass



Solid Glass Red
front panel made of red natural glass



Solid Glass Black
front pane made of black natural glass

**Characteristic for 100 Solid Glass L*

Accessories

Air ducts | Grilles and hoods | Backdraft dampers | Speedcontrollers | Clamps



Aerodynamic characteristics

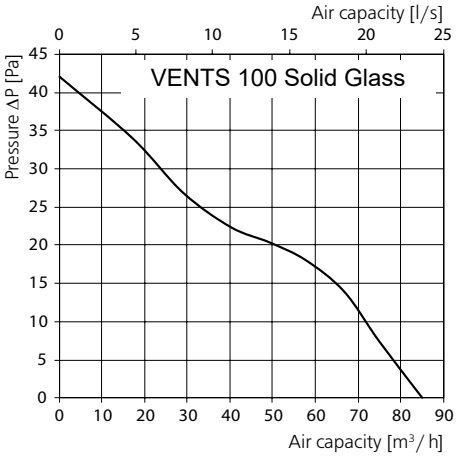

Technical data

Model	Frequency [Hz]	Voltage [V]	Power consumption [W]	Current [A]	RPM [min⁻¹]	Maximum air flow [m³/h]	Sound Pressure Level [dBA]*	Weight [kg]	IP
VENTS 100 Solid Glass L	50	220-240	8	0.5	2100	85	26	0.51	44 Zone 1
VENTS 100 Solid Glass L (220 V/60 Hz)	60	220							

*Sound pressure level measured in free space at a distance of 3 meters from the fan.

Overall dimensions

Model	Dimensions [mm]			
	Ø D	B	L	L1
VENTS 100 Solid Glass	99	160	79	38

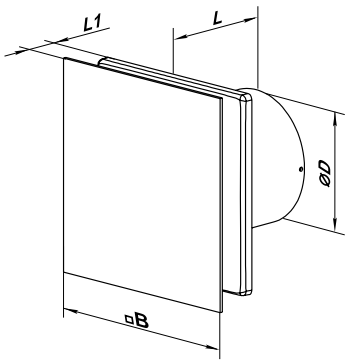

Mounting example



Certificates

IP44 Zone 1

The fans meet the applicable safety and electromagnetic compatibility standards.

Series
VENTS Wave



Low-noise and low-power extract axial fan with air flow up to 85 m³/h

Application

- Permanent or intermittent extract ventilation of shower rooms, bathrooms, kitchens and other residential premises
- Ventilation of premises with high requirements to noise level.
- Mounting into ventilation shafts or connection to Ø 100 mm air ducts.

Design

- Modern design and aesthetic look.
- The casing, the impeller and the front panel are made of high-quality and durable UV-resistant plastic.
- The specially designed aerodynamic profile of the mixed-flow impeller provides high air flow and pressure combined with low-noise operation.
- The fan is equipped with a specially designed backdraft damper to prevent back flow and heat losses during the fan standby.
- The fan exhaust spigot incorporates specially designed air rectifiers to reduce air turbulence, noise level and boost air pressure.

Motor

- Reliable motor with low energy demand.
- Rated for continuous operation and is completely maintenance-free.
- Integrated overheating protection

Modifications and Options

Wave L: modification with a ball bearing motor for long service life (around 40 000 operating hours). Installation at any angle is possible. The ball bearings require no maintenance and are greased for the entire service life.

Wave T: modification with a regulated turn-off delay timer.

Wave T1: modification with a turn-on delay timer regulated from 10 seconds to 2 minutes and a turn-off delay timer regulated from 2 up to 30 minutes.

Wave TH: modification with a turn-off delay timer regulared from 2 up to 30 minutes and a humidity sensor regulated from 60 % up to 90 %.

Wave V: modification with a pull-cord switch.

Wave VT: modification with a pull-cord switch and a turn-off delay timer regulated from 2 up to 30 minutes.

Wave VTH: modification with a pull cord switch, turn-off delay timer regulated from 2 up to 30 mi-nutes and a humidity sensor regulated from 60 % up to 90 %.

Mounting features

- Direct installation inside a ventilation shaft.
- Flexible air ducts may be used in case of remote location of the ventilation shaft. The air duct is connected to the exhaust spigot with a fixing clamp.
- Wall mounting with screws.
- Suitable for ceiling mounting.

Control

Manual control:

- Manual operation with a room light switch (not included in the delivery set).
- Operation with a built-in pull cord switch **V**. Not applicable in case of the ceiling mounting.

Automatic control:

- Control with the electronic control unit **BU–1–60** (see Electrical Accessories). The control unit is supplied separately.
- Control with the turn-off delay timer **T**. The built-in turn-off delay timer enables operation of the fan within 2 up to 30 minutes after turning the fan off with a switch.
- Control with the timer **T1**. After turning of the external switch the turn-on delay timer is activated for from 10 seconds to 2 minutes. The fan remains turned off. After the fan is turned off with the external switch the fan keeps running within 2 up to 30 minutes according to the settings of the turn-off delay timer.
- Control with the humidity sensor and timer **TH**. If the indoor humidity exceeds the set humidity point adjustable from 60 to 90 %, the fan switches automatically on and runs until the indoor humidity drops below the set humidity point. After that the fan continues running according to the timer settings and turns off.

Accessories

Air ducts | Grilles and hoods | Backdraft dampers | Speed controllers | Clamps



Aerodynamic characteristics

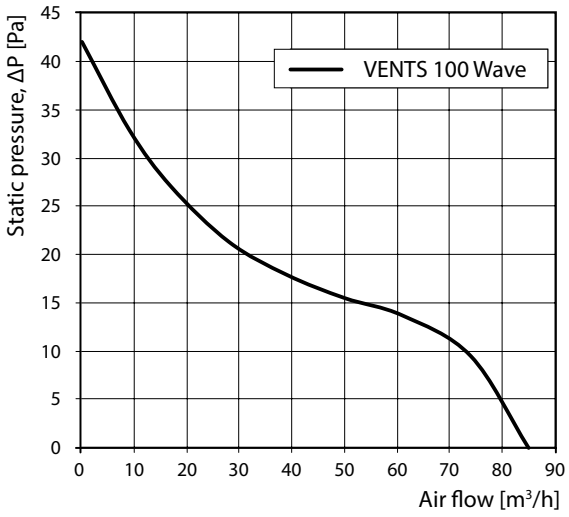

Overall dimensions

Model	Dimensions [mm]			
	Ø D	B	L	L1
VENTS 100 Wave	99	160	79	38

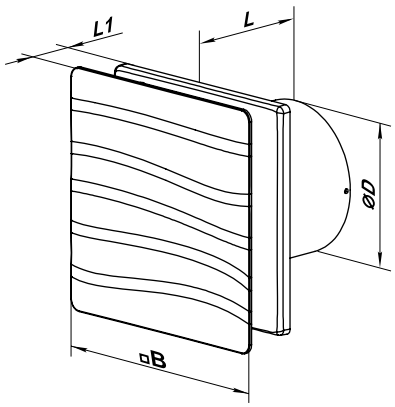

Technical data

Model	Frequency [Hz]	Voltage [V]	Power consumption [W]	Current [A]	RPM [min⁻¹]	Maximum air flow [m³/h]	Sound Pressure Level [dBA]*	Weight [kg]	IP
VENTS 100 Wave	50	220-240	8	0.05	2000	85	27	0.51	44
VENTS 100 Wave (220 V/60 Hz)	60	220	8	0.05	2000	85	27	0.51	44

*Sound pressure level measured in free space at a distance of 3 meters from the fan.

Mounting example



Certificates

IP44

The fans meet the applicable safety and electromagnetic compatibility standards.

Series
VENTS Wave One



Low-noise and low-power extract axial fan with air flow up to 85 m³/h* suitable for use in Zone 1

Application

- Permanent or intermittent extract ventilation of shower rooms, bathrooms, kitchens and other residential premises
- Ventilation of premises with high requirements to noise level.
- Mounting into ventilation shafts or connection to Ø 100 mm air ducts.

Design

- Additional rubber seal realized by two-component molding allows the fans to be used in Zone 1.
- Modern design and aesthetic look.
- The casing, the impeller and the front panel are made of high-quality and durable UV-resistant plastic.
- Advanced 7-blade aerodynamic profile of the mixed-flow impeller provides high air flow and pressure combined with low-noise operation.
- The fan is equipped with a specially designed backdraft damper to prevent back flow and heat losses during the fan standby.
- The fan exhaust spigot incorporates specially designed air rectifiers to reduce air turbulence, noise level and boost air pressure.

Motor

- Reliable motor with low energy demand.
- Rated for continuous operation and is completely maintenance-free.
- Integrated overheating protection.

Modifications and Options

Wave One L: modification with a ball bearing motor for long service life (around 40 000 operating hours). Installation at any angle is possible. The ball bearings require no maintenance and are greased for the entire service life.

Wave One T: modification with a regulated turn-off delay timer.

Wave One T1: modification with a turn-on delay timer regulated from 10 seconds to 2 minutes and a turn-off delay timer regulated from 2 up to 30 minutes.

Wave One TH: modification with a turn-off delay timer regulated from 2 up to 30 minutes and a humidity sensor regulated from 60 % up to 90 %.

Wave One V: modification with a pull-cord switch.

Control

Manual control:

- Manual operation with a room light switch (not included in the delivery set).
- Operation with a built-in pull cord switch V. Not applicable in case of the ceiling mounting.

Automatic control:

- Control with the electronic control unit **BU–1–60** (see Electrical Accessories). The control unit is supplied separately.
- Control with the turn-off delay timer **T**. The built-in turn-off delay timer enables operation of the fan within 2 up to 30 minutes after turning the fan off with a switch.
- Control with the timer **T1**. After turning of the external switch the turn-on delay timer is activated for from 10 seconds to 2 minutes. The fan remains turned off. After the fan is turned off with the external switch the fan keeps running within 2 up to 30 minutes according to the settings of the turn-off delay timer.
- Control with the timer and humidity sensor **TH**. If the indoor humidity exceeds the set humidity point adjustable from 60 to 90 %, the fan switches automatically on and runs until the indoor humidity drops below the set humidity point. After that the fan continues running according to the timer settings and turns off.

Mounting features

- Direct installation inside a ventilation shaft.
- Flexible air ducts may be used in case of remote location of the ventilation shaft. The air duct is connected to the exhaust spigot with a fixing clamp.
- Wall mounting with screws.
- Suitable for ceiling mounting.

Accessories

Air ducts | Grilles and hoods | Backdraft dampers | Speed controllers | Clamps



Aerodynamic characteristics

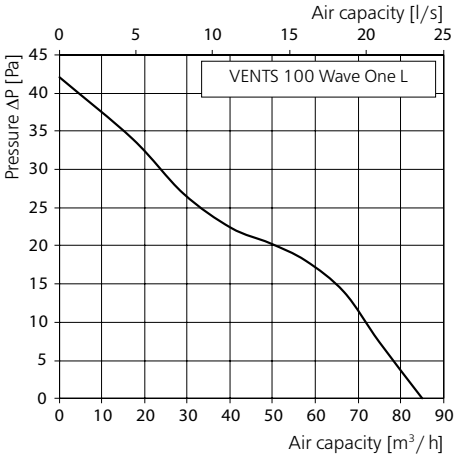

Overall dimensions

Model	Dimensions [mm]			
	Ø D	B	L	L1
VENTS 100 Wave One	99	160	79	38

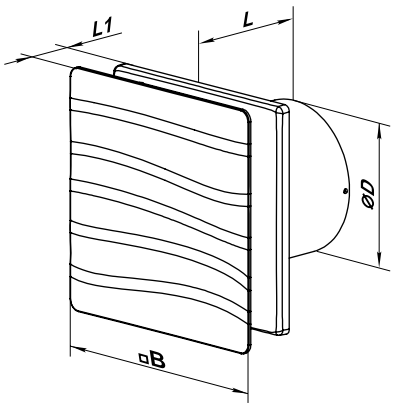

Technical data

Model	Frequency [Hz]	Voltage [V]	Power consumption [W]	Current [A]	RPM [min⁻¹]	Maximum air flow [m³/h]	Sound Pressure Level [dBA]*	Weight [kg]	IP
VENTS 100 Wave One L	50	220-240	8	0.5	2100	85	26	0.51	44 Zone 1
VENTS 100 Wave One L (220 V/60 Hz)	60	220							

*Sound pressure level measured in free space at a distance of 3 meters from the fan.

Mounting example



Certificates

IP44 Zone 1

The fans meet the applicable safety and electromagnetic compatibility standards.

Series
VENTS Flip



Low-noise and low-power extract axial fan with air flow up to 85 m³/h

Application

- Permanent or intermittent extract ventilation of shower rooms, bathrooms, kitchens and other residential premises.
- Ventilation of premises with high requirements to noise level.
- Mounting into ventilation shafts or connection to Ø 100 mm air ducts.

Design

- Modern design and aesthetic look.
- The casing, the impeller and the front panel are made of high-quality and durable UV-resistant plastic.
- The specially designed aerodynamic profile of the mixed-flow impeller provides high air flow and pressure combined with low-noise operation.
- The fan is equipped with a specially designed backdraft damper to prevent back flow and heat losses during the fan standby.
- The fan exhaust spigot incorporates specially designed air rectifiers to reduce air turbulence, noise level and boost air pressure.

Motor

- Reliable motor with low energy demand.
- Rated for continuous operation and is completely maintenance-free.
- Integrated overheating protection.

Modifications and Options

Flip L: modification with a ball bearing motor for long service life (around 40 000 operating hours). Installation at any angle is possible. The ball bearings require no maintenance and are greased for the entire service life.

Flip T: modification with a regulated turn-off delay timer.

Flip T1: modification with a turn-on delay timer regulated from 10 seconds to 2 minutes and a turn-off delay timer regulated from 2 up to 30 minutes.

Flip TH: modification with a turn-off delay timer regulated from 2 up to 30 minutes and a humidity sensor regulated from 60 % up to 90 %.

Flip V: modification with a pull-cord switch.

Flip VT: modification with a pull-cord switch and a turn-off delay timer regulated from 2 up to 30 minutes.

Flip VTH: modification with a pull cord switch, turn-off delay timer regulated from 2 up to 30 minutes and a humidity sensor regulated from 60 % up to 90 %.

Mounting features

- Direct installation inside a ventilation shaft.
- Flexible air ducts may be used in case of remote location of the ventilation shaft. The air duct is connected to the exhaust spigot with a fixing clamp.
- Wall mounting with screws.
- Suitable for ceiling mounting.

Control

Manual control:

- Manual operation with a room light switch (not included in the delivery set).
- Operation with a built-in pull cord switch **V**. Not applicable in case of the ceiling mounting.

Automatic control:

- Control with the electronic control unit **BU–1–60** (see Electrical Accessories). The control unit is supplied separately.
- Control with the turn-off delay timer **T**. The built-in turn-off delay timer enables operation of the fan within 2 up to 30 minutes after turning the fan off with a switch.
- Control with the timer **T1**. After turning of the external switch the turn-on delay timer is activated for from 10 seconds to 2 minutes. The fan remains turned off. After the fan is turned off with the external switch the fan keeps running within 2 up to 30 minutes according to the settings of the turn-off delay timer.
- Control with the timer and humidity sensor **TH**. If the indoor humidity exceeds the set humidity point adjustable from 60 to 90 %, the fan switches automatically on and runs until the indoor humidity drops below the set humidity point. After that the fan continues running according to the timer settings and turns off.

Accessories

Air ducts | Grilles and hoods | Backdraft dampers | Speed controllers | Clamps



Aerodynamic characteristics

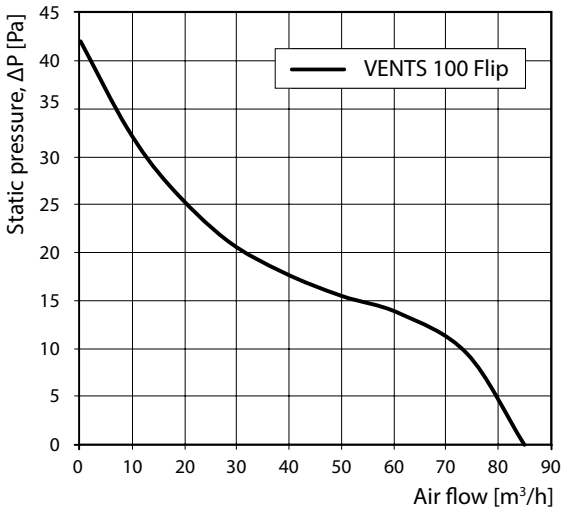

Overall dimensions

Model	Dimensions [mm]			
	Ø D	B	L	L1
VENTS 100 Flip	99	160	79	38

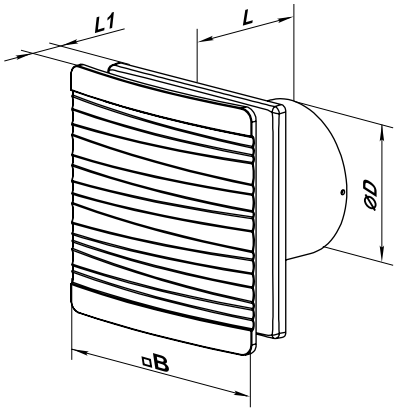

Technical data

Model	Frequency [Hz]	Voltage [V]	Power consumption [W]	Current [A]	RPM [min^{-1}]	Maximum air flow [m³/h]	Sound Pressure Level [dBA]*	Weight [kg]	IP
VENTS 100 Flip	50	220-240	8	0.05	2000	85	27	0.51	44
VENTS 100 Flip (220 V/60 Hz)	60	220	8	0.05	2000	85	27	0.51	44

*Sound pressure level measured in free space at a distance of 3 meters from the fan.

Mounting example



Certificates

IP44

The fans meet the applicable safety and electromagnetic compatibility standards.

Series
VENTS Flip One



Low-noise and low-power extract axial fan with air flow up to 85 m^3/h* suitable for use in Zone 1

Application

- Permanent or intermittent extract ventilation of shower rooms, bathrooms, kitchens and other residential premises
- Ventilation of premises with high requirements to noise level.
- Mounting into ventilation shafts or connection to Ø 100 mm air ducts.

Design

- Additional rubber seal realized by two-component molding allows the fans to be used in Zone 1.
- Modern design and aesthetic look.
- The casing, the impeller and the front panel are made of high-quality and durable UV-resistant plastic.
- Advanced 7-blade aerodynamic profile of the mixed-flow impeller provides high air flow and pressure combined with low-noise operation.
- The fan is equipped with a specially designed backdraft damper to prevent back flow and heat losses during the fan standby.
- The fan exhaust spigot incorporates specially designed air rectifiers to reduce air turbulence, noise level and boost air pressure.

Motor

- Reliable motor with low energy demand.
- Rated for continuous operation and is completely maintenance-free.
- Integrated overheating protection.

Modifications and Options

Flip One L: modification with a ball bearing motor for long service life (around 40 000 operating hours). Installation at any angle is possible. The ball bearings require no maintenance and are greased for the entire service life.

Flip One T: modification with a regulated turn-off delay timer.

Flip One T1: modification with a turn-on delay timer regulated from 10 seconds to 2 minutes and a turn-off delay timer regulated from 2 up to 30 minutes.

Flip One TH: modification with a turn-off delay timer regulated from 2 up to 30 minutes and a humidity sensor regulated from 60 % up to 90 %.

Flip One V: modification with a pull-cord switch.

Control

Manual control:

- Manual operation with a room light switch (not included in the delivery set).
- Operation with a built-in pull cord switch V. Not applicable in case of the ceiling mounting.

Automatic control:

- Control with the electronic control unit **BU–1–60** (see Electrical Accessories). The control unit is supplied separately.
- Control with the turn-off delay timer **T**. The built-in turn-off delay timer enables operation of the fan within 2 up to 30 minutes after turning the fan off with a switch.
- Control with the timer **T1**. After turning of the external switch the turn-on delay timer is activated for from 10 seconds to 2 minutes. The fan remains turned off. After the fan is turned off with the external switch the fan keeps running within 2 up to 30 minutes according to the settings of the turn-off delay timer.
- Control with the timer and humidity sensor **TH**. If the indoor humidity exceeds the set humidity point adjustable from 60 to 90 %, the fan switches automatically on and runs until the indoor humidity drops below the set humidity point. After that the fan continues running according to the timer settings and turns off.

Mounting features

- Direct installation inside a ventilation shaft.
- Flexible air ducts may be used in case of remote location of the ventilation shaft. The air duct is connected to the exhaust spigot with a fixing clamp.
- Wall mounting with screws.
- Suitable for ceiling mounting.

**Characteristic for 100 Flip One L*

Accessories

Air ducts | Grilles and hoods | Backdraft dampers | Speed controllers | Clamps



Aerodynamic characteristics

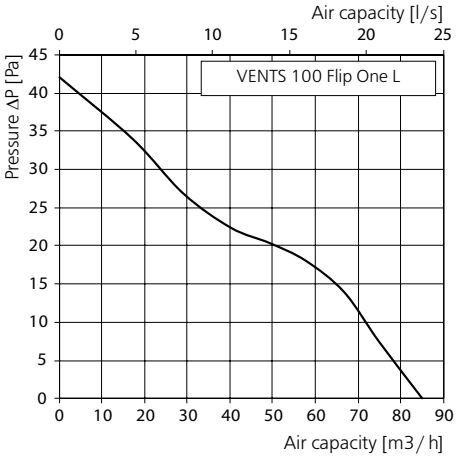

Overall dimensions

Model	Dimensions [mm]			
	Ø D	B	L	L1
VENTS 100 Flip One	99	160	79	38

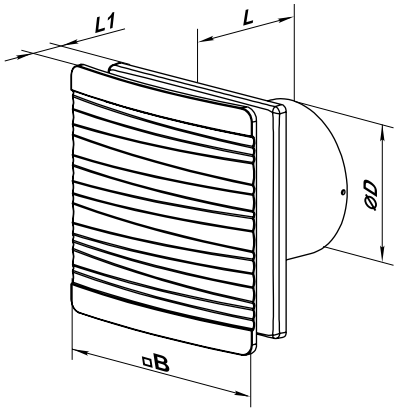

Technical data

Model	Frequency [Hz]	Voltage [V]	Power consumption [W]	Current [A]	RPM [min^{-1}]	Maximum air flow [m^3/h]	Sound Pressure Level [dBA]*	Weight [kg]	IP
VENTS 100 Flip One L	50	220-240	8	0.5	2100	85	26	0.51	44 Zone 1
VENTS 100 Flip One L (220 V/60 Hz)	60	220							

*Sound pressure level measured in free space at a distance of 3 meters from the fan.

Mounting example



Certificates

IP44 Zone 1

The fans meet the applicable safety and electromagnetic compatibility standards.

VENTS MF Series



Low-noise and energ saving axial fan for exhaust ventilation with air capacity up to 255 m³/h

Applications

- Continuous or periodic exhaust ventilation of bathroom, showers, kitchens and other utility spaces.
- Ventilation of premises with high noise level limitations.
- Mounting into ventilation shafts or connection to Ø100, 125 and 150 mm air ducts.

Design

- The casing and the impeller are made of high-quality durable ABS plastic, UV resistant.
- Specially designed impeller aerodynamic profile provides high air capacity and low noise.
- The fan is equipped with a back valve to prevent back flow and heat losses during the fan standby.
- The fan exhaust spigot incorporates specially designed air rectifiers to reduce air turbulence, increase air pressure and lower noise level.

Motor

- Low energy demand from 8 W due to new high-efficient motor.
- Protection rating IP 44.
- Designed for continuous operation and requires no maintenance.
- Motor equipped with overheating protection.

Modifications and Options

MF L – the motor is equipped with ball bearings for long service life (appr. 40 thousand hours) and fan mounting at any angle. The bearings are maintenance-free and contain enough grease for the entire operating period.

MF T – off-delay timer modification with operating time from 2 to 30 min.

MF T1 – modification with turn-on delay timer (adjustable from 0 to 2 minutes) and off-delay timer (adjustable from 2 to 30 minutes).

MF TH – off-delay timer modification with the operating time from 2 to 30 min and humidity sensor with threshold from 60 to 90%.

MF V – pull-cord switch modification.

MF VT – modification with pull-cord switch and off-delay timer with operating time from 2 to 30 min.

MF VTH – modification with pull-cord switch, off-delay timer with operating time from 2 to 30 min and humidity sensor with threshold from 60 to 90%.

Control

Manual control:

- Manual control with a room light switch. The switch is not included into delivery set.
- The fan is controlled by the built-in pull cord switch **V**. Not applied in case of ceiling mounting.
- Speed control is possible through a thyristor\ speed controller (see Electrical Accessories). Several fans may connected to the same controller. Speed controllers can not be connected to the fans with T, TH, TP, VT, VTH modification.

Automatic:

- By the electronic control unit **BU–1–60**. The control unit is supplied separately.
- By the timer **T** (the built-in run-out timer enables the fan operation within 2 to 30 minutes after the fan switching off).
- By the humidity sensor and timer **TH** (if the humidity level in the room exceeds the sensor threshold adjustable value within 60-90% the fan switches automatically on and operates until the humidity level drops to the standard level, after that the fan continues operating within the time period according to the timer setting, then shuts down).

Mounting features

- The fan is mounted directly into the ventilation shaft.
- Flexible duct application is recommended in case of remote location of the ventilation shaft.
- The air duct is connected to the fan exhaust flange through a clamp.
- Fixed to wall by self-tapping screws.
- Suitable for ceiling mounting.

Accessories

Air ducts | Grilles and hoods | Backdraft damper | Speed controllers | Clamps



Aerodynamic characteristics

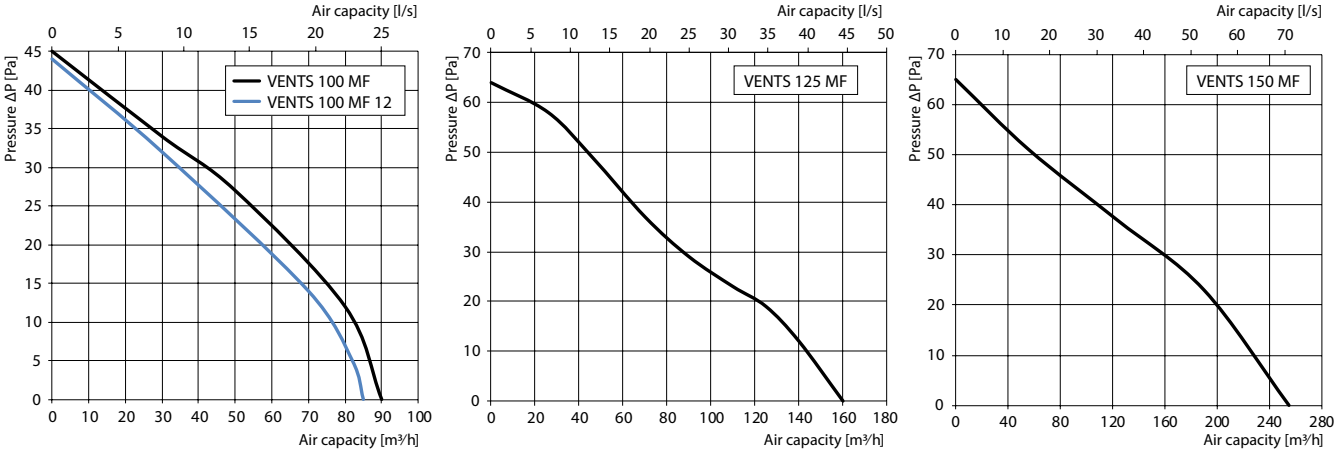

Technical data

Model	Frequency [Hz]	Voltage [V]	Power Consumption [W]	Current [A]	R.p.m.	Maximum air flow [m³/h]	Sound Pressure Level [dBA]*	Weight [kg]
VENTS 100 MF	50	220-240	8	0.05	2165	90	29	0.45
VENTS 100 MF (220 V/60 Hz)	60							
VENTS 100 MF 12	50	12	8	1.02	2075	85	28	0.45
VENTS 125 MF	50	220-240	18	0.11	2200	160	34	0.80
VENTS 125 MF (220 V/60 Hz)	60							
VENTS 150 MF	230	220-240	28	0.21	1545	255	35	0.97

*Sound pressure level measured in free space at a distance of 3 meters from the fan.

Overall dimensions

Model	Dimensions [mm]			
	Ø D	B	L	L1
VENTS 100 MF	99	150	79	19
VENTS 125 MF	124	180	85	21
VENTS 150 MF	148	205	112	23

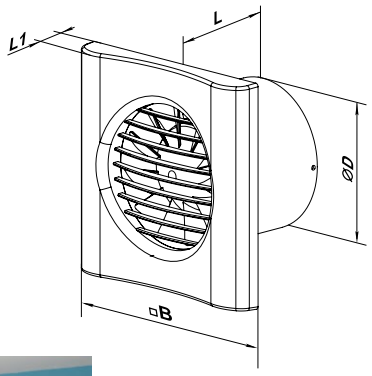

Mounting example



Certificates

IP44

The fans meet the applicable safety and electromagnetic compatibility standards.

Series
VENTS MF Duo



Two-speed axial low-noise and low energy fans for exhaust ventilation with air flow up to 300 m³/h

Application

- Continuous or periodic exhaust ventilation of bathroom, showers, kitchens, and other residential premises.
- Ventilation of premises with high requirements to noise level.
- Permanent low-speed operation mode ensures continuous air exchange in the room.
- Ventilation shaft mounting or connection to Ø 100, 125 and 150 mm air ducts.

Design

- The casing and the impeller are made of high-quality durable plastic, UV resistant.
- The aerodynamic design of the impeller ensures high air flow and low noise level.
- The fan is equipped with a specially designed backdraft damper to prevent back flow and heat losses during the fan standby.
- The fan outlet spigot incorporates specially designed air rectifiers to reduce air turbulence, noise level and increase air pressure.

Motor

- Low energy demand from 5 W due to a new two-speed high-efficient motor.
- Ingress protection rating IP44.
- Designed for continuous operation and requires no maintenance.
- Equipped with overheating protection.

Modifications and options

MF L Duo – the motor is equipped with ball bearings to increase the service life (about 40 thousand operating hours) and fan mounting at any angle. The bearings are maintenance-free and contain enough grease for the entire operating period.

MF T1 Duo – equipped with an adjustable high-speed turn-on delay timer (from 0 to 2 minutes) and an adjustable high-speed turn-off delay timer (from 2 to 30 minutes).

MF TH Duo – equipped with an adjustable turn-off delay timer (from 2 to 30 minutes) and a fixed turn-on delay timer (45 s) with a humidity sensor adjustable from 60 % to 90 %.

Control

Manual:

- The fan is operated via a light switch (not included in the delivery set).

Automatic:

- By the **T1** timer. When the external switch is turned on, the fan switches to a higher speed with a delay of 0 to 2 minutes. When the external switch is turned off, the fan will return to a low speed with a delay of 2 to 30 minutes.
- By the humidity sensor and the **TH** timer. If the humidity level in the room exceeds the sensor threshold (60-90 %), the fan will automatically switch to a higher speed and will continue running until humidity returns to normal levels. Then the fan runs for 5 minutes at a high speed and switches to a low speed. The fan with a timer and TH humidity sensor can also be controlled in manual mode, for example, using the light switch. When the control voltage is applied, the turn-on delay timer is activated for 45 seconds and the fan switches to the second speed. After disconnecting the control voltage, the fan runs for a time set by the turn-off delay timer (from 2 to 30 minutes), and switches to the first speed.

Mounting features

- The fan is mounted directly into the ventilation shaft.
- Flexible duct connection is recommended in case of the remote ventilation shaft location. The air duct is connected to the fan exhaust flange through a clamp.
- Wall fixing with screws.
- Suitable for ceiling mounting.

Accessories

Air ducts | Grilles and hoods | Backdraft damper | Speed controllers | Clamps



Aerodynamic characteristics

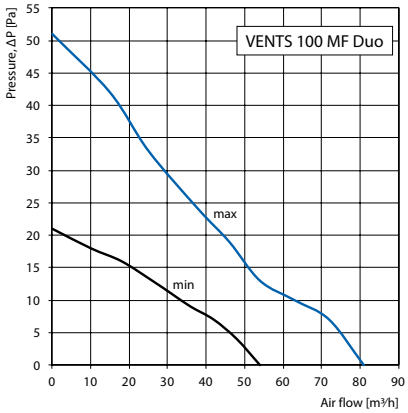

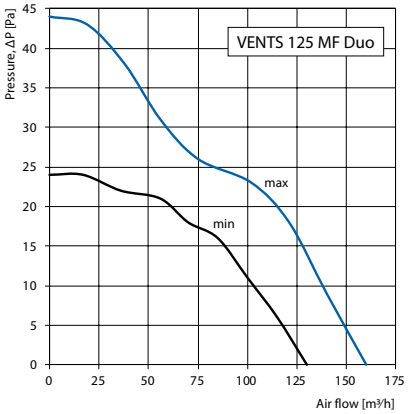

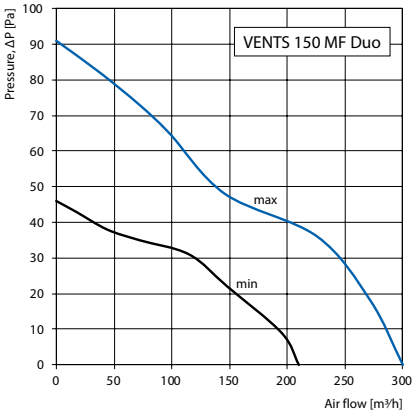

Technical data

Model	Speed	Frequency [Hz]	Voltage [V]	Power [W]	Current [A]	Maximum air flow [m³/h]	RPM [min⁻¹]	Sound Pressure Level [dBA]*	Weight [kg]	IP Code
VENTS 100 MF Duo	min.	50	220-240	5	0.030	54	1800	23	0.55	IP44
	max.			8	0.050	81	2100	28		
VENTS 125 MF Duo	min.	50	220-240	10	0.068	130	1100	29	0.78	IP44
	max.			14	0.092	160	1800	33		
VENTS 150 MF Duo	min.	50	220-240	18	0.079	210	1520	29	0.97	IP44
	max.			21	0.085	300	2050	35		

*Sound pressure level measured in free space at a distance of 3 meters from the fan.

Overall dimensions

Model	Dimensions [mm]			
	Ø D	B	L	L1
VENTS 100 MF Duo	99	150	79	19
VENTS 125 MF Duo	124	180	85	21
VENTS 150 MF Duo	148	205	112	23

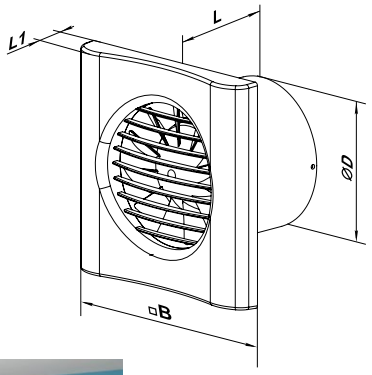

Application example



Certificates

IP44

The fans meet the applicable safety and electromagnetic compatibility standards.

VENTS MF One
Series



Low-noise and energy-saving axial fan for exhaust ventilation with air capacity up to 95 m³/h* suitable for use in Zone 1

Applications

- Continuous or periodic exhaust ventilation of bathroom, showers, kitchens and other utility spaces.
- Ventilation of premises with high noise level limitations.
- Mounting into ventilation shafts or connection to Ø100 mm air ducts.

Design

- Additional rubber seal realized by two-component molding allows the fans to be used in Zone 1.

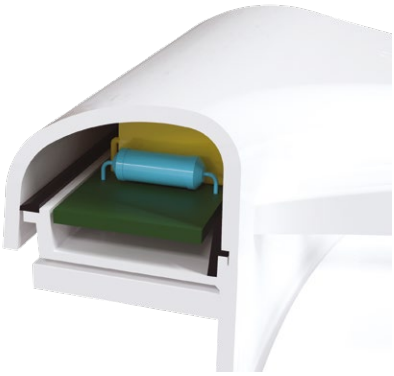



- The casing and the impeller are made of high-quality durable ABS plastic, UV resistant.
- Advanced 7-blade impeller aerodynamic profile provides even better performance and lower noise level.



- The fan is equipped with a back valve to prevent back flow and heat losses during the fan standby.
- The fan exhaust spigot incorporates specially designed air rectifiers to reduce air turbulence, increase air pressure and lower noise level.

Motor

- Low energy demand from 8 W due to new high-efficient motor.
- Designed for continuous operation and requires no maintenance.
- Motor equipped with overheating protection.

Modifications and Options

MF One L – the motor is equipped with ball bearings for long service life (appr. 40 thousand hours) and fan mounting at any angle. The bearings are maintenance-free and contain enough grease for the entire operating period.

MF One T – off-delay timer modification with operating time from 2 to 30 min.

MF One T1 – modification with turn-on delay timer (adjustable from 0 to 2 minutes) and off-delay timer (adjustable from 2 to 30 minutes).

MF One TH – off-delay timer modification with the operating time from 2 to 30 min and humidity sensor with threshold from 60 to 90%.

MF One V – pull-cord switch modification.

Control

Manual control:

- Manual control with a room light switch. The switch is not included into delivery set.
- The fan is controlled by the built-in pull cord switch **V**. Not applied in case of ceiling mounting.
- Speed control is possible through a thyristor\ speed controller (see Electrical Accessories). Several fans may connected to the same controller. Speed controllers can not be connected to the fans with T, TH, TP, VT, VTH modification.

Automatic:

- By the electronic control unit **BU–1–60**. The control unit is supplied separately.
- By the timer **T** (the built-in run-out timer enables the fan operation within 2 to 30 minutes after the fan switching off).
- By the humidity sensor and timer **TH** (if the humidity level in the room exceeds the sensor threshold adjustable value within 60-90% the fan switches automatically on and operates until the humidity level drops to the standard level, after that the fan continues operating within the time period according to the timer setting, then shuts down).

Mounting features

- The fan is mounted directly into the ventilation shaft.
- Flexible duct application is recommended in case of remote location of the ventilation shaft.
- The air duct is connected to the fan exhaust flange through a clamp.
- Fixed to wall by self-tapping screws.
- Suitable for ceiling mounting.

**Characteristic for 100 MF One L*

Accessories

Air ducts | Grilles and hoods | Backdraft damper | Speed controllers | Clamps



Aerodynamic characteristics

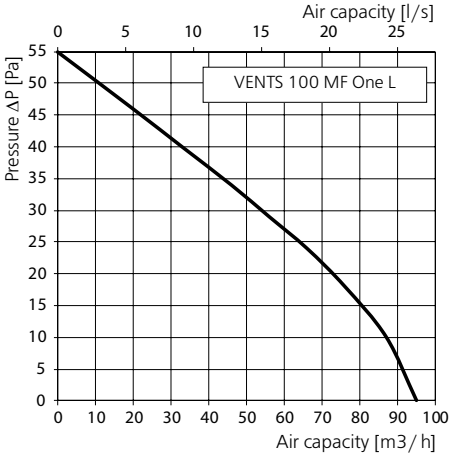

Technical data

Model	Frequency [Hz]	Voltage [V]	Power Consumption [W]	Current [A]	RPM [min^{-1}]	Maximum air flow [m^3/h]	Sound Pressure Level [dBA]*	Weight [kg]	IP
VENTS 100 MF One L	50	220-240	8	0.05	2154	95	27	0.45	44 Zone 1
VENTS 100 MF One L (220 V/60 Hz)	60	220							

*Sound pressure level measured in free space at a distance of 3 meters from the fan.

Overall dimensions

Model	Dimensions [mm]			
	Ø D	B	L	L1
VENTS 100 MF One	99	150	79	19

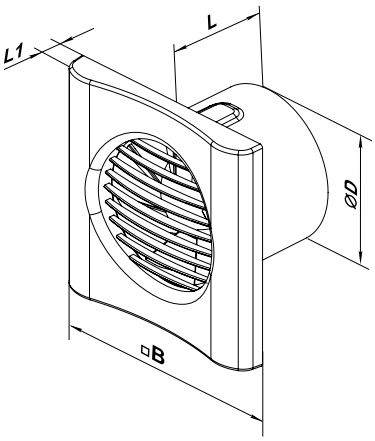

Mounting example



Certificates

IP44 Zone 1

The fans meet the applicable safety and electromagnetic compatibility standards.

VENTS Casto Series



Low-noise and energy saving axial fan for exhaust ventilation with air flow up to 255 m³/h

Application

- Continuous or periodic exhaust ventilation of bathroom, showers, kitchens and other utility spaces.
- Ventilation of premises with high noise level limitations.
- Mounting into ventilation shafts or connection to Ø100 and 150 mm air ducts.

Design

- The casing and the impeller are made of high-quality durable ABS plastic, UV resistant.
- Specially designed impeller aerodynamic profile provides high air flow and low noise.
- The fan is equipped with a back valve to prevent back flow and heat losses during the fan standby.
- The fan exhaust spigot incorporates specially designed air rectifiers to reduce air turbulence, increase air pressure and lower noise level.

Motor

- Low energy demand from 8 W due to new high-efficient motor.
- Designed for continuous operation and requires no maintenance.
- Motor equipped with overheating protection.

Modifications and Options

Casto L – the motor is equipped with ball bearings for long service life (appr. 40 thousand hours) and fan mounting at any angle. The bearings are maintenance-free and contain enough grease for the entire operating period.

Casto T – an adjustable turn-off delay timer modification with operating time from 2 to 30 min.

Casto T1 – modification with a turn-on delay timer (adjustable from 0 to 2 minutes) and a turn-off delay timer (adjustable from 2 to 30 minutes).

Casto TH – an adjustable timer modification with the operating time from 2 to 30 min and a humidity sensor with threshold from 60 to 90%.

Casto V – a pull-cord switch modification.

Casto VT – modification with a pull-cord switch and an adjustable timer with operating time from 2 to 30 min.

Casto VTH – modification with a pull-cord switch, an adjustable timer with operating time from 2 to 30 min and a humidity sensor with threshold from 60 to 90%.

Control

Manual control:

- Manual control by a room light switch. The switch is not included into the delivery set.
- The fan is controlled by the built-in pull cord switch **V**. Not applied in case of ceiling mounting.
- Speed control is possible through a thyristor speed controller (see Electrical Accessories). Speed controllers can not be connected to the fans with T, TH, TP, VT, VTH modification.

Automatic:

- By the electronic control unit **BU–1–60** (see Electrical Accessories). The control unit is supplied separately.
- By the timer **T** (the built-in adjustable turn-off delay timer enables the fan to operate within 2 to 30 minutes after the fan switching off).
- By the timer **T1** (the built-in adjustable turn-on and turn-off delay timer turns on the fan in 0…2 min after the switch provides a control signal and allows it to operate from 2 to 30 minutes after opening of the switch).
- By a humidity sensor and timer **TH** (if the humidity level in the room exceeds the sensor threshold adjustable value within 60-90% the fan switches automatically on and operates until the humidity level drops to the standard level, after that the fan continues operating within the time period according to the timer setting, then shuts down).

Mounting features

- The fan is mounted directly into the ventilation shaft.
- Flexible duct application is recommended in case of remote location of the ventilation shaft.
- The air duct is connected to the fan exhaust flange through a clamp.
- Fixed to the wall by self-tapping screws.
- Can be ceiling mounted in case the fan is ordered with ball bearings (Casto L modification).

Accessories

Air ducts | Grilles and hoods | Backdraft damper | Speed controller | Clamps



Aerodynamic characteristics

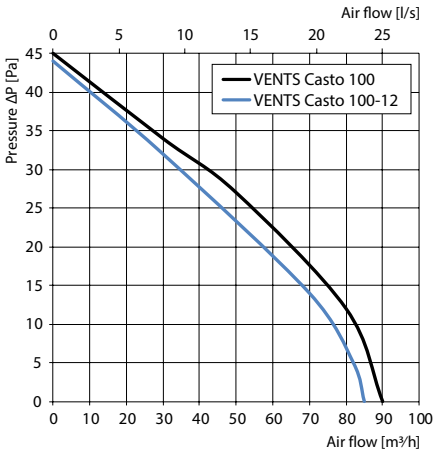

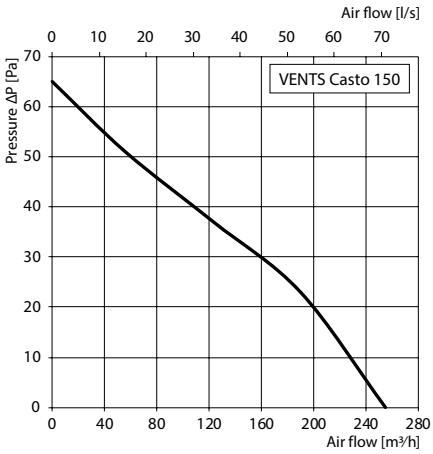

Technical data

Model	Frequency	Voltage	Power Consumption	Current	Maximum Air Flow		Specific Power	Sound Pressure Level	Weight	IP
	[Hz]	[V]	[W]	[A]	[m³/h]	[l/s]	[W/l/s]	[dBA]*	[kg]	
VENTS Casto 100	50	220-240	8	0.05	90	25	0.32	29	0.45	IP44
VENTS Casto 100 (220 V/60 Hz)	60	220								
VENTS Casto 100-12	50	12	8	1.02	85	24	0.34	28	0.45	IP44
VENTS Casto 150	50	220-240	28	0.21	255	71	0.39	35	0.97	IP44

*Sound pressure level measured in free space at a distance of 3 meters from the fan.

Overall dimensions

Model	Dimensions [mm]			
	Ø D	B	L	L1
VENTS Casto 100	99	150	79	23
VENTS Casto 150	148	206	112	23

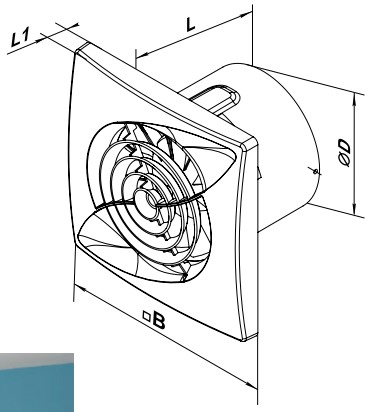

Mounting example



Certificates

IP44

The fans meet the applicable safety and electromagnetic compatibility standards.

Series
VENTS Casto Duo



Two-speed axial low-noise and low energy fans for exhaust ventilation with air flow up to 300 m³/h

Application

- Continuous or periodic exhaust ventilation of bathroom, showers, kitchens, and other residential premises.
- Ventilation of premises with high requirements to noise level.
- Permanent low-speed operation mode ensures continuous air exchange in the room.
- Ventilation shaft mounting or connection to Ø 100 and 150 mm air ducts.

Design

- The casing and the impeller are made of high-quality durable plastic, UV resistant.
- The aerodynamic design of the impeller ensures high air flow and low noise level.
- The fan is equipped with a specially designed backdraft damper to prevent back flow and heat losses during the fan standby.
- The fan outlet spigot incorporates specially designed air rectifiers to reduce air turbulence, noise level and increase air pressure.

Motor

- Low energy demand from 5 W due to a new two-speed high-efficient motor.
- Designed for continuous operation and requires no maintenance.
- Equipped with overheating protection.

Modifications and options

Casto L Duo – the motor is equipped with ball bearings to increase the service life (about 40000 of operating hours) and a fan, mounting at any angle. The bearings are maintenance-free and contain enough grease for the entire operating period.

Casto T1 Duo – equipped with an adjustable high-speed turn-on delay timer (from 0 to 2 minutes) and an adjustable high-speed turn-off delay timer (from 2 to 30 minutes).

Casto TH Duo – equipped with an adjustable turn-off delay timer (from 2 to 30 minutes) and a fixed turn-on delay timer (45 s) with a humidity sensor adjustable from 60 % to 90 %.

Control

Manual:

- The fan is operated via light switch (not included in the delivery set).

Automatic:

- By the **T1** timer. When the external switch is turned on, the fan switches to a higher speed with a delay of 0 to 2 minutes. When the external switch is turned off, the fan will return to a low speed with a delay of 2 to 30 minutes.
- By a humidity sensor and the **TH** timer. If the humidity level in the room exceeds the sensor threshold (60-90 %), the fan will automatically switch to a higher speed and will continue running until humidity returns to normal levels. Then the fan runs for 5 minutes at a high speed and switches to a low speed. The fan with the **TH** timer and a humidity sensor can also be controlled in manual mode, for example, using the light switch. When the control voltage is applied, the turn-on delay timer is activated for 45 seconds and the fan switches to the second speed. After disconnecting the control voltage, the fan runs for a time set by the turn-off delay timer (from 2 to 30 minutes), and switches to the first speed.

Mounting features

- The fan is mounted directly into the ventilation shaft.
- Flexible duct connection is recommended in case of the remote ventilation shaft location. The air duct is connected to the fan exhaust flange by means of a clamp.
- Wall fixing with screws.
- Suitable for ceiling mounting.

Accessories

Air ducts | Grilles and hoods | Backdraft dampers | Clamps



Aerodynamic characteristics

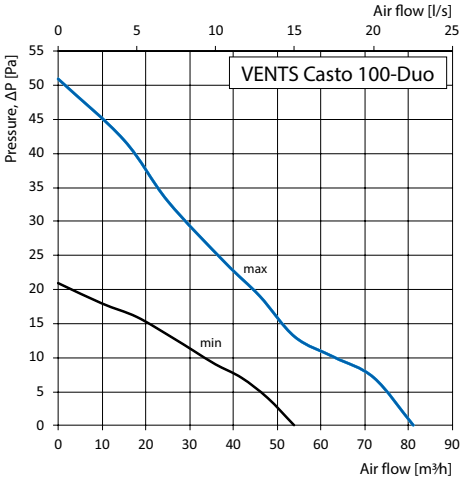

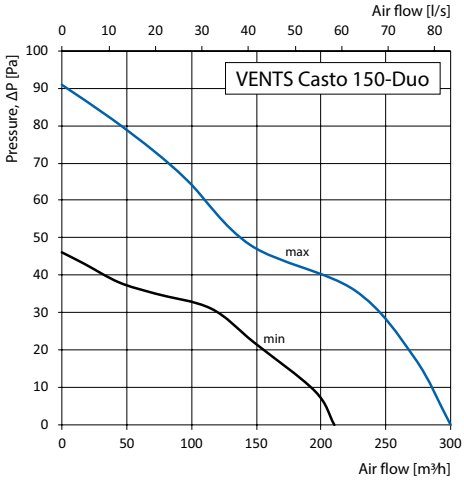

Technical data

Model	Speed	Frequency	Voltage	Power Consumption	Current	Maximum Air Flow		Specific Power	Sound Pressure Level [dBA]*	Weight	IP
		[Hz]	[V]	[W]	[A]	[m³/h]	[l/s]	[W/l/s]	[dBA]	[kg]	
VENTS Casto 100-Duo	min.	50	220-240	5	0.030	54	15	0.33	23	0.55	IP44
	max.			8	0.050	81	23	0.35	28		
VENTS Casto 150-Duo	min.	50	220-240	18	0.079	210	58	0.31	29	0.97	IP44
	max.			21	0.085	300	83	0.25	35		

*Sound pressure level measured in free space at a distance of 3 meters from the fan.

Overall dimensions

Model	Dimensions [mm]			
	Ø D	B	L	L1
VENTS Casto 100-Duo	99	150	79	23
VENTS Casto 150-Duo	148	206	112	23

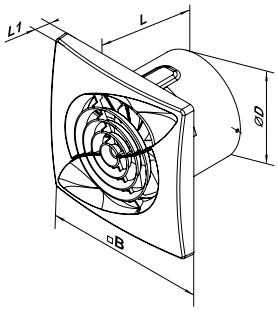

Application example



Certificates

IP44 The fans meet the applicable safety and electromagnetic compatibility standards.

VENTS Casto One
Series



Low-noise and energy-saving axial fan for exhaust ventilation with air capacity up to 95 m³/h* suitable for use in Zone 1

Applications

- Continuous or periodic exhaust ventilation of bathroom, showers, kitchens and other utility spaces.
- Ventilation of premises with high noise level limitations.
- Mounting into ventilation shafts or connection to Ø100 mm air ducts.

Design

- Additional rubber seal realized by two-component molding allows the fans to be used in Zone 1.

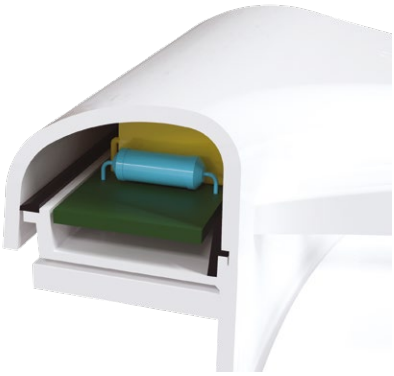



- The casing and the impeller are made of high-quality durable ABS plastic, UV resistant.
- Advanced 7-blade impeller aerodynamic profile provides even better performance and lower noise level.



- The fan is equipped with a back valve to prevent back flow and heat losses during the fan standby.
- The fan exhaust spigot incorporates specially designed air rectifiers to reduce air turbulence, increase air pressure and lower noise level.

Motor

- Low energy demand from 8 W due to new high-efficient motor.
- Designed for continuous operation and requires no maintenance.
- Motor equipped with overheating protection.

Modifications and Options

Casto One L – the motor is equipped with ball bearings for long service life (appr. 40 thousand hours) and fan mounting at any angle. The bearings are maintenance-free and contain enough grease for the entire operating period.

Casto One T – off-delay timer modification with operating time from 2 to 30 min.

Casto One T1 – modification with turn-on delay timer (adjustable from 0 to 2 minutes) and off-delay timer (adjustable from 2 to 30 minutes).

Casto One TH – off-delay timer modification with the operating time from 2 to 30 min and humidity sensor with threshold from 60 to 90%.

Casto One V – pull-cord switch modification.

Control

Manual control:

- Manual control with a room light switch. The switch is not included into delivery set.
- The fan is controlled by the built-in pull cord switch **V**. Not applied in case of ceiling mounting.
- Speed control is possible through a thyristor\speed controller (see Electrical Accessories). Several fans may connected to the same controller. Speed controllers can not be connected to the fans with T, TH, TP, VT, VTH modification.

Automatic:

- By the electronic control unit **BU–1–60**. The control unit is supplied separately.
- By the timer **T** (the built-in run-out timer enables the fan operation within 2 to 30 minutes after the fan switching off).
- By the humidity sensor and timer **TH** (if the humidity level in the room exceeds the sensor threshold adjustable value within 60-90% the fan switches automatically on and operates until the humidity level drops to the standard level, after that the fan continues operating within the time period according to the timer setting, then shuts down).

Mounting features

- The fan is mounted directly into the ventilation shaft.
- Flexible duct application is recommended in case of remote location of the ventilation shaft.
- The air duct is connected to the fan exhaust flange through a clamp.
- Fixed to wall by self-tapping screws.
- Suitable for ceiling mounting.

**Characteristic for 100 Casto One L*

Accessories

Air ducts | Grilles and hoods | Backdraft damper | Speed controllers | Clamps



Aerodynamic characteristics

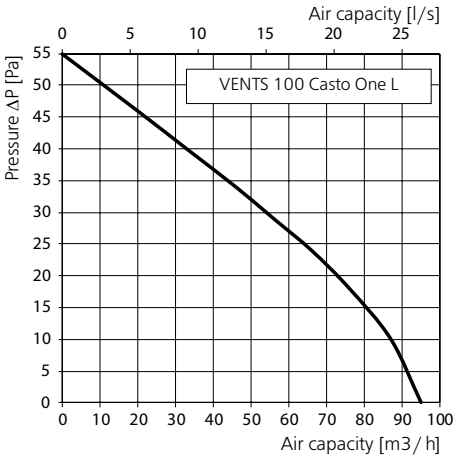

Technical data

Model	Frequency [Hz]	Voltage [V]	Power Consumption [W]	Current [A]	RPM [min^{-1}]	Maximum air flow [m^3/h]	Sound Pressure Level [dBA]*	Weight [kg]	IP
VENTS 100 Casto One L	50	220-240	8	0.05	2154	95	27	0.45	44 Zone 1
VENTS 100 Casto One L (220 V/60 Hz)	60	220							

*Sound pressure level measured in free space at a distance of 3 meters from the fan.

Overall dimensions

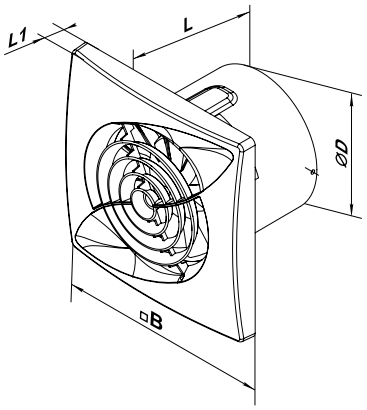

Model	Dimensions [mm]			
	Ø D	B	L	L1
VENTS 100 Casto One	99	150	79	19

Mounting example



Certificates

IP44 Zone 1

The fans meet the applicable safety and electromagnetic compatibility standards.

AXIAL INLINE FANS

VENTS Quietline Series



Axial inline fans, for exhaust or supply ventilation with the capacity up to 375 m³/h. Compatible with Ø 100, 125 and 150 mm air ducts.

VENTS VKO and VKOk Series



Axial inline fans, for exhaust or supply ventilation with the capacity up to 358 m³/h. Compatible with Ø 100, 125 and 150 mm air ducts.

VENTS VKO1 and VKO1k Series

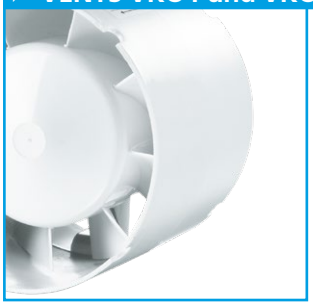

Axial inline fans, for exhaust or supply ventilation with the capacity up to 365 m³/h. Compatible with Ø 100, 125 and 150 mm air ducts.







Axial inline fans
VENTS Quietline Series
Air flow up to 375 m³/h

page 94



Axial inline fans
VENTS VKO Series
Air flow up to 358 m³/h

page 98

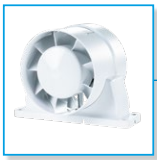

Axial inline fans with a fixing bracket
VENTS VKOk Series
Air flow up to 358 m³/h

page 98

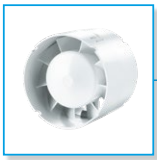

Axial inline fans
VENTS VKO1 Series
Air flow up to 365 m³/h

page 100



Axial inline fans with a fixing bracket
VENTS VKO1k Series
Air flow up to 365 m³/h

page 100

VENTS Quietline
Series



Brand new low-noise axial inline fans, for exhaust or supply ventilation with superior capacity up to 375 m³/h

Application

- Innovative stylish extract or supply fans for enhanced comfort level.
- Continuous or periodic ventilation of bathroom, showers, kitchens and other utility spaces.
- Maximum air flow combined with low noise level ensures an ideal room microclimate.
- Exhaust or supply ventilation depending on fan installation in the system.
- Designed for plastic (flexible) ducts.
- Transportation of low and medium air flow volumes for small distances at low air resistance in the ventilation system.
- Compatible with Ø 100, 125 and 150 mm air ducts.

Motor

- Reliable ball bearing motor with low energy demand from 4.5 W.
- VENTS Quietline models are equipped with a single-phase single or two speed motor (Quietline Duo and Quietline Extra modifications).
- The integrated thermal overheating protection prevents motor overload.
- The motor rests on rubber anti-vibration connectors to ensure low-noise operation of the fan (except for VENTS Quietline 150 Q).

Modifications and Options

Quietline Extra: modification with a two speed high-powered motor.

Quietline Duo: modification with a reliable single-phase two speed motor.

Quietline Q: modification with a low-speed motor for quiet operation.

Quietline 12: modification with a low voltage 12V AC motor.

Quietline K: modification with a backdraft damper for back flow prevention.

Quietline T: modification with a regulated timer with the operating time adjustable from 2 to 30 minutes.

Quietline R: modification with a power cord and IEC C14 electric plug.

Quietline-k: modification with a fixing bracket for flat surface mounting.

Operation modes of fans with timer

Operation modes for T modifications of VENTS Quietline 100, VENTS Quietline 125, VENTS Quietline 150 and VENTS Quietline 150 Extra models are selected by setting the DIP switch in required position.

Mode 1

- The fan is turned off by default. The fan starts operating at the low speed when the switch is closed.

Mode 2

- The fan is turned off by default. The fan starts operating at the high speed when the switch is closed.

Mode 3 (two-speed mode)

- The fan operates at the low speed by default. The fan switches to the high speed when the switch is closed.

Mode 4 (automatic interval mode)

- The fan operates at the low speed by default. The fan switches to the high speed each set time period (adjustable from 1 to 15 hours) and operates up to 30 min to ventilate the premise with maximum capacity. After that the fan models back to the continuous operation at low speed.

Control

Manual speed control:

- The fan is controlled by a room light switch. It is not included in the delivery package.
- Speed control is performed with SRS-1 and RS-1-0,5 thyristor speed controller (applicable for the models without timer). Optionally, speed control for VENTS Quietline 100 Duo, VENTS Quietline 125 Duo, VENTS Quietline 150 Duo, VENTS Quietline 150 Extra may be performed with P2-1-300 speed switch (for details, see Electrical Accessories).

Automatic speed control:

- With **BU-1-60** electronic control unit (for details, see Electrical Accessories). Available upon separate order.
- With timer T (integrated turn-off delay timer keeps the fan operating 2 up to 30 minutes after turning the fan off).

Mounting features

- The fan is mounted into a matching duct size. Fastening with clamps in case of flexible duct connection.
- The mounting bracket enables fan installation on both horizontal and vertical flat surfaces (**Quietline-k** model).
- Serial mounting of two fans boosts the operation pressure.
- For 12 V low-voltage motor fan connection to 220 V/50 Hz power mains use the step-down transformer TRF 220/12-25 (available upon separate order).

Accessories

Diffusers and air disk valves | Air ducts | Grilles and hoods | Backdraft damper | Speed controllers | Control unit



Design

- The casing and the impeller are made of high-quality durable plastic.
- The exhaust spigot is fitted with specially designed air flow rectifiers to reduce air turbulence, noise level and increase air pressure.



- The impeller design enhances fan efficiency and ensures low-noise operation of the fan.
- Ingress protection rating IPX4.

Overall Dimensions [mm]

Model	L	Ø D	k
VENTS Quietline 100	137.5	99	-
VENTS Quietline-k 100	137.5	99	54
VENTS Quietline 125	161.5	125	-
VENTS Quietline-k 125	161.5	125	53.5
VENTS Quietline 150	182	150	-
VENTS Quietline-k 150	182	150	54

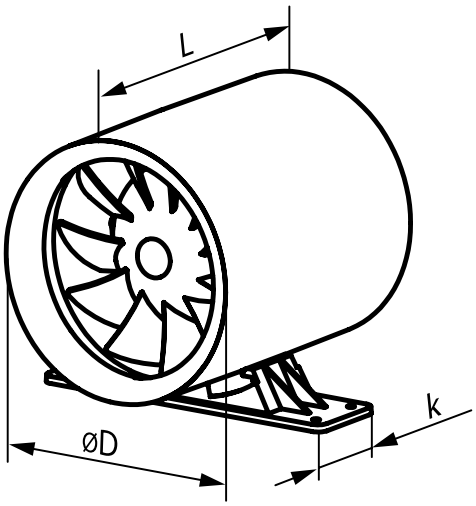

Aerodynamic characteristics

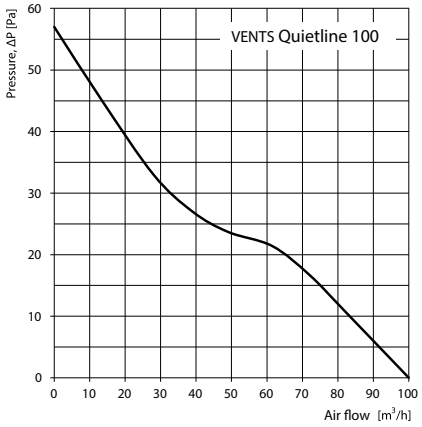

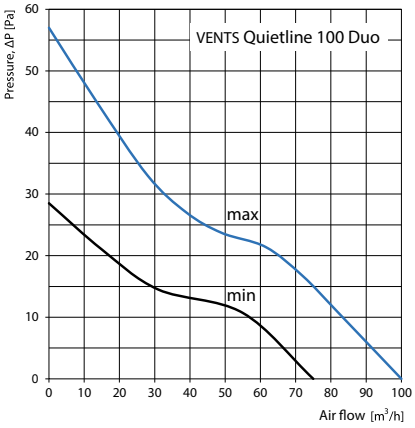

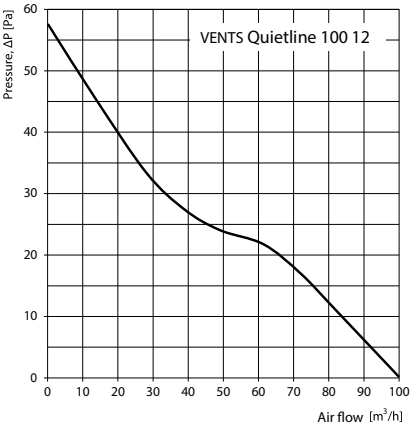

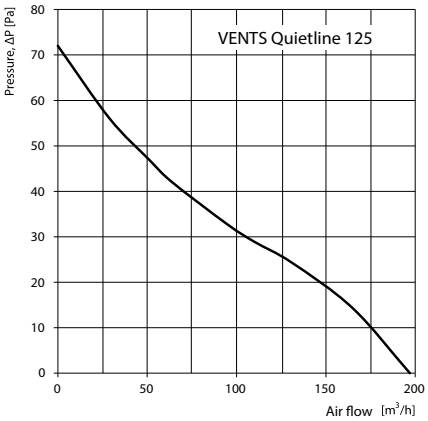

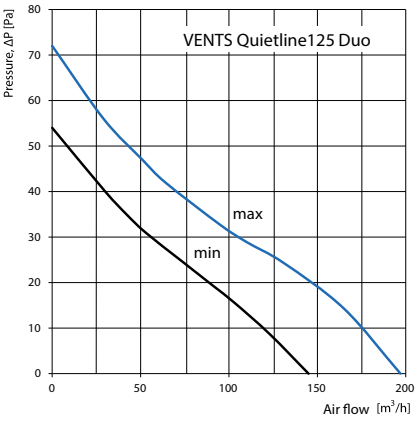

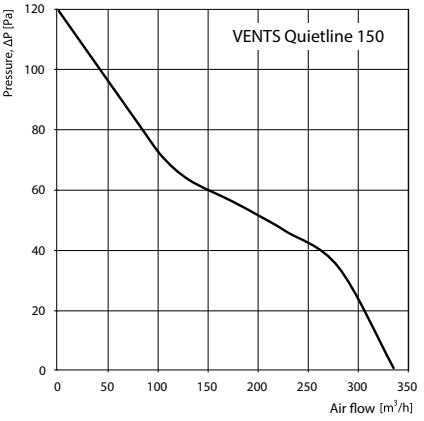

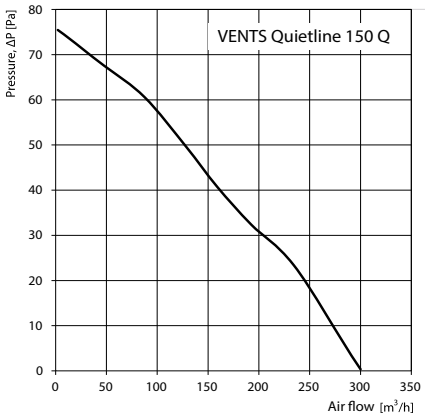

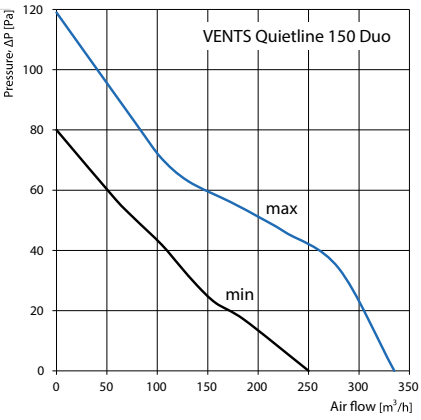

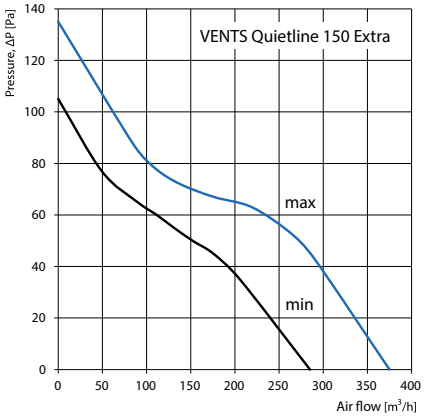

Technical data

Model	Speed	Frequency [Hz]	Voltage [V]	Power consumption [W]	Current [A]	r.p.m.	Maximum air flow [m³/h]	Sound Pressure Level [dBA]*	Weight [kg]
VENTS Quietline 100	-	50	220-240	7.5	0.049	2100	100	25	0.61
VENTS Quietline 100 [220 V/60 HZ]		60	220						
VENTS Quietline 100 Duo	min.	50	220-240	4.5	0.029	1650	75	22	
	max.			7.5	0.049	2100	100	25	
VENTS Quietline 100 12	-	50	12	7.5	0.99	2100	100	25	
Vents Quietline 125	-	50	220-240	13	0.085	2250	197	32	0.75
Vents Quietline 125 [220 V/60 HZ]		60	220						
Vents Quietline 125 Duo	min.	50	220-240	10	0.065	1950	145	29	
	max.			13	0.085	2250	197	32	
VENTS Quietline 150	-	50/60	220-240	22	0.095	2250	335	39	1.3
VENTS Quietline 150 Q	-	50/60	220-240	26	0.085	1900	305	37	
VENTS Quietline 150 Duo	min.	50/60	220-240	19	0.087	1950	250	36	
	max.			22	0.095	2250	335	39	
VENTS Quietline 150 Extra	min.	50/60	220-240	22	0.103	2300	285	36	
	max.			25	0.109	2600	375	41	

*Sound pressure level measured in free space at a distance of 3 meters from the fan.

Mounting examples





VENTS VKO
Series

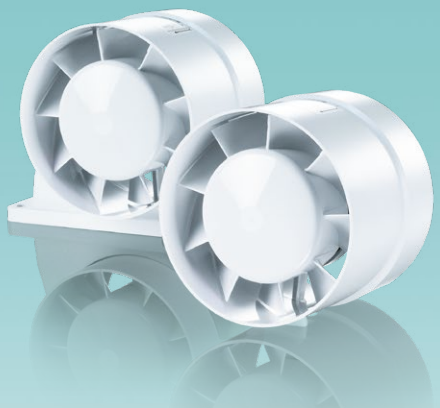

Axial inline fans,
for exhaust or supply ventilation with
the capacity up to 358 m³/h

Application

- Continuous or periodic exhaust ventilation of bathroom, showers, kitchens and other utility spaces.
- Exhaust or supply ventilation depending on the fan mounting type in the system.
- Designed for PVC ducting systems or flexible ducts.
- Low to medium air flow motion for short distances at low air resistance.
- Compatible with Ø 100, 125 and 150 mm air ducts.

Design

- The casing and the impeller are made of high-quality durable ABS plastic, UV resistant.
- The intellectual impeller design makes the fan efficiency high and the service life long.
- Protection rating IPX4.

Motor

- Reliable and low-watt electric motor.
- Designed for continuous operation and requires no maintenance.
- Equipped with overheating protection.

Modifications and Options

VKOk – fan with a fixing bracket for flat surface mounting.

VKO L – the motor is equipped with ball bearings for long service life (appr. 40 thousand hours) and fan mounting at any angle. The bearings are maintenance-free and contain enough grease for the entire operating period.

VKO turbo – high-powered motor.

VKO press – 5-blade low-noise impeller with improved aerodynamics for higher fan capacity.

VKO 12 – modification with low-voltage motor. 12 V AC power supply.

Control

Manual:

- The fan is controlled by a room light switch. It is not included in the delivery package.
- Speed control is possible through a thyristor speed controller (see Electrical Accessories). Several fans may connected to the same controller. Speed controllers can not be connected to the fans with T, TH, TP, VT, VTH modification.

Automatic:

- By the electronic control unit **BU-1-60** (see Electrical Accessories). The control unit is supplied separately.

Mounting features

- The fan is mounted into a matching duct size. Fastening with clamps in case of flexible duct connection.
- This series fans have different intake and exhaust flange diameters to enable attachment of the decorative grille **MV** to the appropriate intake flange diameter in case of direct installation into the ventilation shaft or instead of the existing ventilation grille.
- The fan can be mounted on a horizontal or vertical flat surface by a fixing bracket (**VKOk** model).
- Two fans can be installed in series for higher performance.
- For 12 V low-voltage motor fan connection to 220 V/50 Hz power mains use the step-down transformer TRF 220/12-25 that is available upon separate order.

Mounting examples



VKO fan flat ventilation example



VKOk fan cottage ventilation example

Accessories



Aerodynamic characteristics

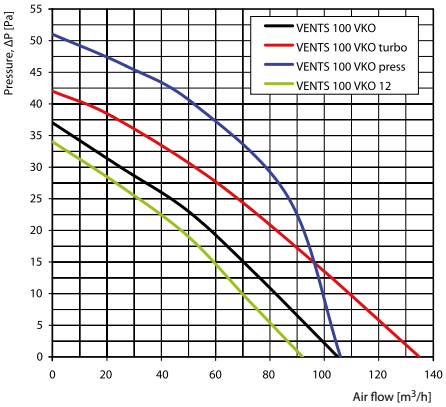

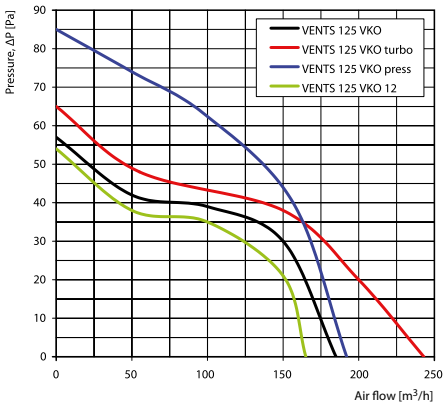

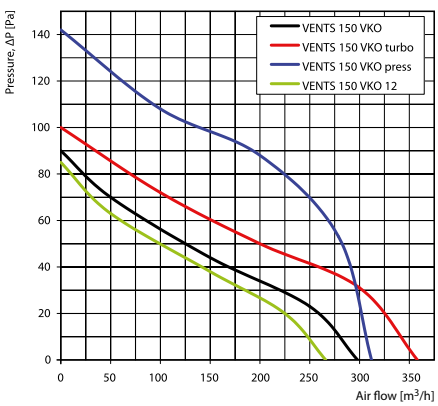

Technical data

Model	Frequency [Hz]	Voltage [V]	Power Consump-tion [W]	Current [A]	R.p.m.	Maximum air flow [m³/h]	Sound Pressure Level [dBA]*	Weight [kg]
VENTS 100 VKO	50	220-240	14	0.085	2300	105	37	0.41
VENTS 100 VKO [220 V/60 Hz]	60	220						
VENTS 100 VKO turbo	50	220-240	16	0.1	2300	135	38	0.41
VENTS 100 VKO turbo [220 V/60 Hz]	60	220						
VENTS 100 VKO press	50	220-240	16	0.1	2300	106	39	0.41
VENTS 100 VKO press [220 V/60 Hz]	60	220						
VENTS 100 VKO 12	50	12	14	1.5	2200	92	36	0.40
VENTS 125 VKO	50	220-240	16	0.1	2400	185	38	0.48
VENTS 125 VKO [220 V/60 Hz]	60	220						
VENTS 125 VKO turbo	50	220-240	24	0.105	2400	243	39	0.48
VENTS 125 VKO turbo [220 V/60 Hz]	60	220						
VENTS 125 VKO press	50	220-240	24	0.105	2400	192	39	0.48
VENTS 125 VKO press [220 V/60 Hz]	60	220						
VENTS 125 VKO 12	50	12	16	1.33	2300	165	37	0.46
VENTS 150 VKO	50	220-240	24	0.13	2400	298	40	0.80
VENTS 150 VKO [220 V/60 Hz]	60	220						
VENTS 150 VKO press	50	220-240	29	0.13	2400	312	44	0.80
VENTS 150 VKO press [220 V/60 Hz]	60	220						
VENTS 150 VKO 12	50	12	29	2	2300	266	39	0.76

*Sound pressure level measured in free space at a distance of 3 meters from the fan.

Overall dimensions

Model	Dimensions [mm]								
	Ø D	Ø D1	B	B1	H	L	L1	L2	L3
VENTS 100 VKO	100	104	–	–	–	91	31	–	–
VENTS 100 VKOk	100	104	160	144	114	91	31	45	29
VENTS 125 VKO	125	130	–	–	–	92	31	–	–
VENTS 125 VKOk	125	130	185	169	139	92	31	45	29
VENTS 150 VKO	150	154	–	–	–	111	46	–	–
VENTS 150 VKOk	150	154	200	184	163	111	46	45	29

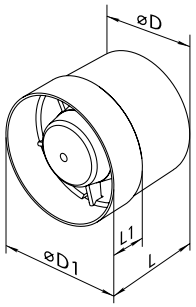

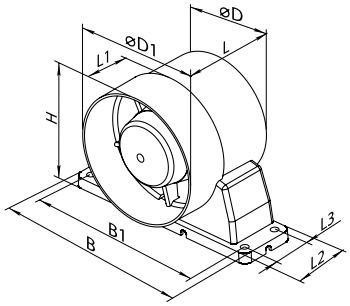

Certificates

IP44

The fans meet the applicable safety and electromagnetic compatibility standards.

VENTS VKO1
Series



Axial inline fans,
for exhaust or supply ventilation with
the capacity up to 365 m³/h

Application

- Continuous or periodic exhaust ventilation of bathroom, showers, kitchens and other utility spaces.
- Exhaust or supply ventilation depending on the fan mounting type in the system.
- Designed for PVC ducting systems or flexible ducts.
- Low to medium air flow motion for short distances at low air resistance.
- Compatible with Ø 100, 125 and 150 mm air ducts.

Design

- The casing and the impeller are made of high-quality durable ABS plastic, UV resistant.
- The intellectual impeller design makes the fan efficiency high and the service life long.
- Protection rating IPX4.

Motor

- Reliable and low-watt electric motor.
- Designed for continuous operation and requires no maintenance.
- Equipped with overheating protection.

Modifications and Options

VKO1k – fan with a fixing bracket for flat surface mounting.

VKO1 L – the motor is equipped with ball bearings for long service life (appr. 40 thousand hours) and fan mounting at any angle. The bearings are maintenance-free and contain enough grease for the entire operating period.

VKO1 turbo – high-powered motor.

VKO1 press – 5-blade low-noise impeller with improved aerodynamics for higher fan capacity.

VKO1 12 – modification with low-voltage motor. 12 V AC power supply.

VKO1 T – equipped with a regulated timer with the operating time from 2 to 30 minutes.

Control

Manual:

- The fan is controlled by a room light switch. It is not included in the delivery package.
- Speed control is possible through a thyristor speed controller (see Electrical Accessories). Several fans may connected to the same controller. Speed controllers can not be connected to the fans with T, TH, TP, VT, VTH modification.

Automatic:

- By the electronic control unit **BU–1–60** (see Electrical Accessories). The control unit is supplied separately.
- By the timer **T** (the built-in turn-off delay timer enables the fan operation within 2 to 30 minutes after the fan switching off).

Mounting features

- The fan is mounted into a matching duct size. Fastening with clamps in case of flexible duct connection.
- The mounting bracket enables fan installation on both horizontal and vertical flat surfaces (**VKO1k** model).
- Two fans can be installed in series for higher performance.
- For 12 V low-voltage motor fan connection to 220 V/50 Hz power mains use the step-down transformer TRF 220/12-25 that is available upon separate order.

Mounting examples



VKO1k fan cottage ventilation example



VKO1 fan flat ventilation example

Accessories



Aerodynamic characteristics

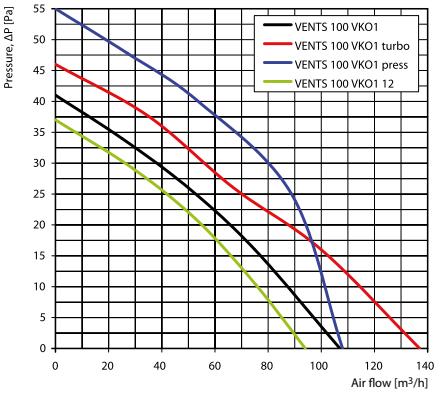

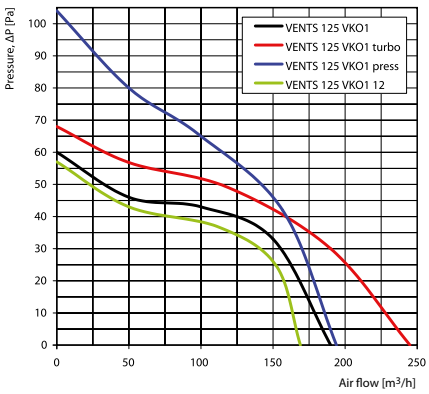

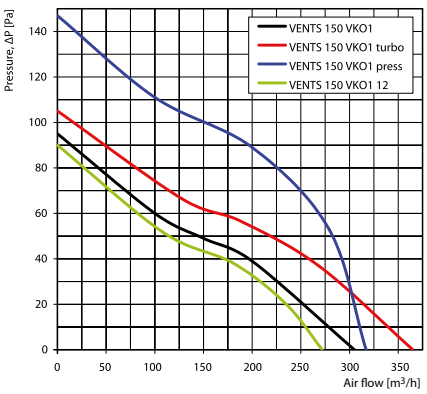

Technical data

Model	Frequency [Hz]	Voltage [V]	Power Consumption [W]	Current [A]	R.p.m.	Maximum air flow [m³/h]	Sound Pressure Level [dBA]*	Weight [kg]
VENTS 100 VKO1	50	220-240	14	0.085	2300	107	36	0.41
VENTS 100 VKO1 (220 V/60 Hz)	60	220						
VENTS 100 VKO1 turbo	50	220-240	16	0.1	2300	137	37	0.49
VENTS 100 VKO1 turbo (220 V/60 Hz)	60	220						
VENTS 100 VKO1 press	50	220-240	16	0.1	2300	108	39	0.41
VENTS 100 VKO1 press (220 V/60 Hz)	60	220						
VENTS 100 VKO1 12	50	12	14	1.5	2200	94	35	0.40
VENTS 125 VKO1	50	220-240	16	0.1	2400	190	38	0.43
VENTS 125 VKO1 (220 V/60 Hz)	60	220						
VENTS 125 VKO1 turbo	50	220-240	24	0.105	2400	245	39	0.51
VENTS 125 VKO1 turbo (220 V/60 Hz)	60	220						
VENTS 125 VKO1 press	50	220-240	24	0.105	2400	194	39	0.43
VENTS 125 VKO1 press (220 V/60 Hz)	60	220						
VENTS 125 VKO1 12	50	12	16	1.7	2300	169	37	0.41
VENTS 150 VKO1	50	220-240	29	0.13	2400	305	40	0.80
VENTS 150 VKO1 (220 V/60 Hz)	60	220						
VENTS 150 VKO1 press	50	220-240	36	0.16	2400	317	42	0.80
VENTS 150 VKO1 press (220 V/60 Hz)	60	220						
VENTS 150 VKO1 12	50	12	24	2	2300	272	39	0.76

*Sound pressure level measured in free space at a distance of 3 meters from the fan.

Overall dimensions

Model	Dimensions [mm]								
	Ø D	Ø d	B	B1	H	L	L1	L2	L3
VENTS 100 VKO1	100	59	–	–	–	85	26	–	–
VENTS 100 VKO1k	100	59	160	144	110	85	26	45	29
VENTS 125 VKO1	125	59	–	–	–	90	28	–	–
VENTS 125 VKO1k	125	59	185	169	125	90	28	45	29
VENTS 150 VKO1	150	59	–	–	–	100	28	–	–
VENTS 150 VKO1k	150	59	200	184	162	100	28	45	29

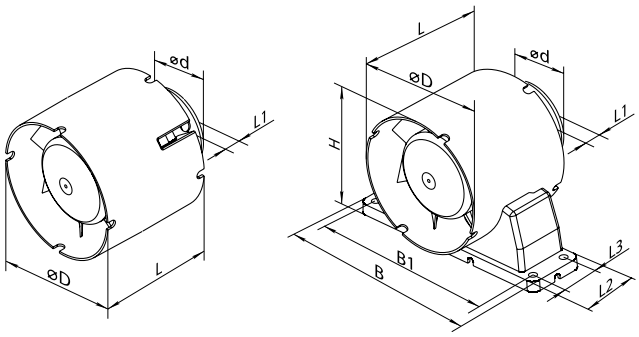

Certificates

IP44

The fans meet the applicable safety and electromagnetic compatibility standards.

AXIAL WALL- AND CEILING-MOUNTED FANS

Axial fans for exhaust ventilation with the capacity up to 365 m³/h. Compatible with Ø 100, 125 or 150 mm air ducts. Some models are equipped with automatic or manual louver shutters. Wide range of designs and options.



Axial fans
VENTS M Series
Air flow up to 345 m³/h

page 104



Axial fans
VENTS M3 Series
Air flow up to 345 m³/h

page 106



Axial fans
VENTS M1 Series
Air flow up to 345 m³/h

page 108



Axial fans with automatic louvre shutters
VENTS MA Series
Air flow up to 345 m³/h

page 110



Axial fans
VENTS X1 Series
Air flow up to 365 m³/h

page 112



Axial fans
VENTS Simple Series
Air flow up to 280 m³/h

page 114



Axial fans
VENTS F Series
Air flow up to 232 m³/h

page 116







AXIAL FANS
VENTS K Series
Air flow up to 341 m³/h
page 118



AXIAL FANS
VENTS K1 Series
Air flow up to 226 m³/h
page 120



AXIAL FANS
VENTS PF Series
Air flow up to 342 m³/h
page 122



AXIAL FANS
VENTS S Series
Air flow up to 341 m³/h
page 124



AXIAL FANS
VENTS D Series
Air flow up to 341 m³/h
page 126



AXIAL FANS
VENTS LP Series
Air flow up to 94 m³/h
page 128

VENTS M
Series



Axial fans
for exhaust ventilation
with the capacity
up to 345 m³/h

Application

- Continuous or periodic exhaust ventilation of bathroom, showers, kitchens and other utility spaces.
- Ventilation shaft mounting or duct connection.
- Low to medium air flow motion for short distances at low air resistance.
- Compatible with Ø 100, 125 and 150 mm air ducts.

Design

- Modern design and aesthetic look.
- The casing and the impeller are made of high-quality durable ABS plastic, UV resistant.
- The intellectual impeller design makes the fan efficiency high and the service life long.
- Protection rating IP34.

Motor

- Reliable and low-watt electric motor.
- Designed for continuous operation and requires no maintenance.
- Equipped with overheating protection.

Modifications and Options

M K – fan is equipped with a backdraft damper for back flow preventing.

M L – the motor is equipped with ball bearings for long service life (appr. 40 thousand hours) and fan mounting at any angle. The bearings are maintenance-free and contain enough grease for the entire operating period.

M turbo – high-powered motor.

M press – 5-blade low-noise impeller with improved aerodynamics for higher fan capacity.

M 12 – modification with low-voltage motor. 12 V AC power supply.

MT – equipped with a regulated timer with the operating time from 2 to 30 minutes.

MTH – equipped with a timer with the operating time from 2 to 30 minutes and a humidity sensor with the threshold value from 60 to 90 %.

MV – equipped with a pull cord switch.

MVT – equipped with a pull cord switch and a regulated timer with the operating time adjustable from 2 to 30 minutes.

MVTH – equipped with a pull cord switch, regulated timer with the operating time adjustable from 2 to 30 minutes and a humidity sensor with the operating threshold range from 60 to 90 %.

MTP – equipped with a regulated timer and a motion sensor with the sensitivity area from 1 to 4 m and the detection angle up to 100°.

Control

Manual:

- The fan is controlled by a room light switch. It is not included in the delivery package.
- The fan is controlled by the built-in pull cord switch **V**. Not applied in case of ceiling mounting.
- Speed control is possible through a thyristor speed controller (see Electrical Accessories). Several fans may connected to the same controller. Speed controllers can not be connected to the fans with T, TH, TP, VT, VTH modification.

Automatic:

- By the electronic control unit **BU–1–60** (see Electrical Accessories). The control unit is supplied separately.
- By the timer **T** (the built-in turn-off delay timer enables the fan operation within 2 to 30 minutes after the fan switching off).
- By the humidity sensor and timer **TH** (if the humidity level in the room exceeds the sensor threshold adjustable value within 60-90 % the fan switches automatically on and operates until the humidity level drops to the standard level, after that the fan continues operating within the time period according to the timer setting, then shuts down).
- By the motion sensor and the timer **TP** (in case of motion detection the fan switches automatically on and operates within the set time period from 2 to 30 minutes. The motion sensitivity area is up to 4 meters and the maximum detection angle is 100°).

Mounting features

- The fan is mounted directly into the ventilation shaft or used for ceiling mounting with the connection to the duct.
- Flexible duct application is recommended in case of remote location of the ventilation shaft. The air duct is connected to the fan exhaust flange through a clamp.
- Fixed to wall by self-tapping screws.
- For 12 V low-voltage motor fan connection to 220 V/50 Hz power mains use the step-down transformer TRF 220/12-25 that is available upon separate order.

Accessories

Air ducts | Grilles and hoods | Backdraft damper | Speed controllers | Clamps



Aerodynamic characteristics

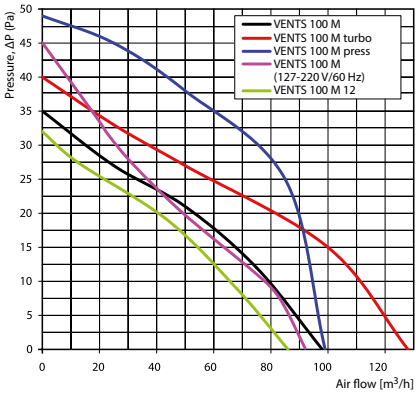

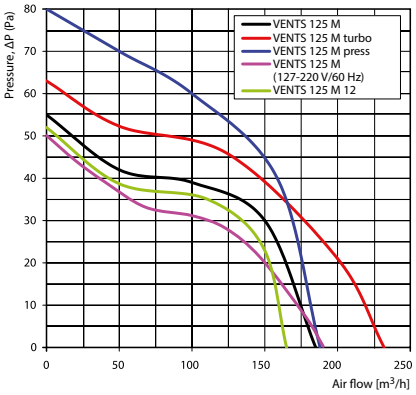

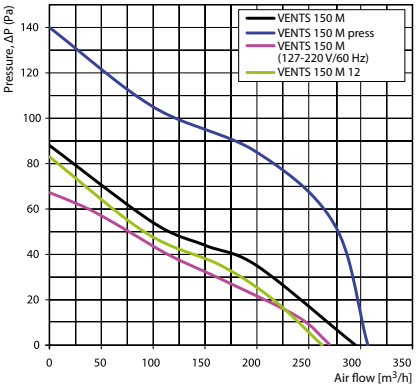

Technical data

Model	Frequency [Hz]	Voltage [V]	Power Consumption [W]	Current [A]	R.p.m.	Maximum air flow [m³/h]	Sound Pressure Level [dBA]*	Weight [kg]
VENTS 100 M	50	220-240	14	0.085	2300	98	34	0.55
VENTS 100 M (220 V/60 Hz)	60	220						
VENTS 100 M turbo	50	220-240	16	0.1	2300	128	37	0.57
VENTS 100 M turbo (220 V/60 Hz)	60	220						
VENTS 100 M press	50	220-240	16	0.1	2300	99	37	0.65
VENTS 100 M press (220 V/60 Hz)	60	220						
VENTS 100 M (127-220 V/60 Hz)	60	127	10	0.115	2500	92	34	0.55
		220	9	0.054				
VENTS 100 M 12	50	12	14	1.5	2200	86	33	0.50
VENTS 125 M	50	220-240	16	0.1	2400	185	35	0.70
VENTS 125 M (220 V/60 Hz)	60	220						
VENTS 125 M turbo	50	220-240	22	0.105	2400	232	37	0.72
VENTS 125 M turbo (220 V/60 Hz)	60	220						
VENTS 125 M press	50	220-240	22	0.105	2400	188	39	0.81
VENTS 125 M press (220 V/60 Hz)	60	220						
VENTS 125 M (127-220 V/60 Hz)	60	127	16	0.119	2400	190	36	0.70
		220	15	0.102				
VENTS 125 M 12	50	12	16	1.7	2300	165	34	0.70
VENTS 150 M	50	220-240	24	0.13	2400	295	39	0.89
VENTS 150 M (220 V/60 Hz)	60	220						
VENTS 150 M press	50	220-240	29	0.13	2400	307	41	0.99
VENTS 150 M press (220 V/60 Hz)	60	220						
VENTS 150 M (127-220 V/60 Hz)	60	127	25	0.338	2350	270	39	0.89
		220	25	0.175				
VENTS 150 M 12	50	12	29	2	2300	263	38	0.89

*Sound pressure level measured in free space at a distance of 3 meters from the fan.

Mounting example



M fan kitchen ventilation example

Overall dimensions

Model	Dimensions [mm]				
	Ø D	B	H	L	L1
VENTS 100 M	100	159	135	88.5	23
VENTS 125 M	125	180	150	94	25
VENTS 150 M	150	206	182	106	25.5

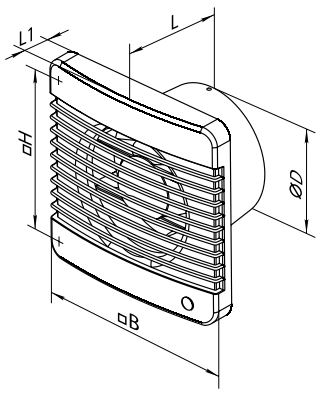

Certificates

IP34

The fans meet the applicable safety and electromagnetic compatibility standards.

VENTS M3
Series



Axial fans
for exhaust ventilation
with the capacity up to 345 m³/h

Application

- Continuous or periodic exhaust ventilation of bathroom, showers, kitchens and other utility spaces.
- Ventilation shaft mounting or duct connection.
- For rectangular ventilation shafts.
- Low to medium air flow motion for short distances at low air resistance.
- Compatible with Ø 100, 125 and 150 mm air ducts.

Design

- Modern design and aesthetic look.
- The casing and the impeller are made of high-quality durable ABS plastic, UV resistant.
- The intellectual impeller design makes the fan efficiency high and the service life long.
- Protection rating IP34.

Motor

- Reliable and low-watt electric motor.
- Designed for continuous operation and requires no maintenance.
- Equipped with overheating protection.

Modifications and Options

M3 K – fan is equipped with a backdraft damper for back flow preventing.

M3 L – the motor is equipped with ball bearings for long service life (appr. 40 thousand hours) and fan mounting at any angle. The bearings are maintenance-free and contain enough grease for the entire operating period.

M3 turbo – high-powered motor.

M3 press – 5-blade low-noise impeller with improved aerodynamics for higher fan capacity.

M3 12 – modification with low-voltage motor. 12 V AC power supply.

M3T – equipped with a regulated timer with the operating time from 2 to 30 minutes.

M3TH – equipped with a timer with the operating time from 2 to 30 minutes and a humidity sensor with the threshold value from 60 to 90 %.

M3V – equipped with a pull cord switch.

M3VT – equipped with a pull cord switch and a regulated timer with the operating time adjustable from 2 to 30 minutes.

M3VTH – equipped with a pull cord switch, regulated timer with the operating time adjustable from 2 to 30 minutes and a humidity sensor with the operating threshold range from 60 to 90 %.

M3TP – equipped with a regulated timer and a motion sensor with the sensitivity area from 1 to 4 m and the detection angle up to 100°.

Control

Manual:

- The fan is controlled by a room light switch. It is not included in the delivery package.
- The fan is controlled by the built-in pull cord switch **V**. Not applied in case of ceiling mounting.
- Speed control is possible through a thyristor speed controller (see Electrical Accessories). Several fans may connected to the same controller. Speed controllers can not be connected to the fans with T, TH, TP, VT, VTH modification.

Automatic:

- By the electronic control unit **BU-1-60** (see Electrical Accessories). The control unit is supplied separately.
- By the timer **T** (the built-in turn-off delay timer enables the fan operation within 2 to 30 minutes after the fan switching off).
- By the humidity sensor and timer **TH** (if the humidity level in the room exceeds the sensor threshold adjustable value within 60-90 % the fan switches automatically on and operates until the humidity level drops to the standard level, after that the fan continues operating within the time period according to the timer setting, then shuts down).
- By the motion sensor and the timer **TP** (in case of motion detection the fan switches automatically on and operates within the set time period from 2 to 30 minutes. The motion sensitivity area is up to 4 meters and the maximum detection angle is 100°).

Mounting features

- The fan is mounted directly into the ventilation shaft or wall mounted and connected to the air ducts.
- The enlarged front grille modification makes the fan suitable for mounting into rectangular ventilation shafts.
- Flexible duct application is recommended in case of remote location of the ventilation shaft. The air duct is connected to the fan exhaust flange through a clamp.
- Fixed to wall by self-tapping screws.
- For 12 V low-voltage motor fan connection to 220 V/50 Hz power mains use the step-down transformer TRF 220/12-25 that is available upon separate order.

Accessories

Air ducts | Grilles and hoods | Backdraft damper | Speed controllers | Clamps



Aerodynamic characteristics

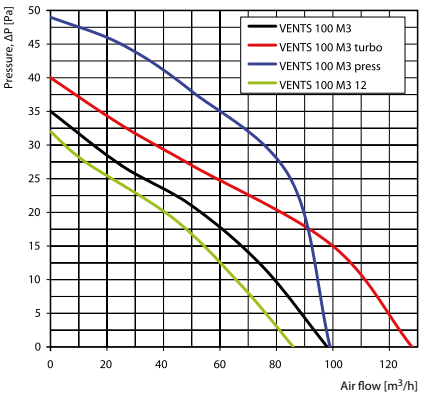

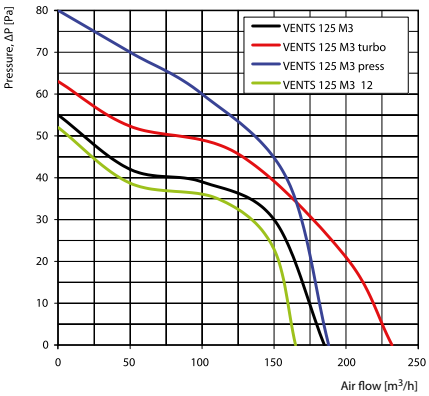

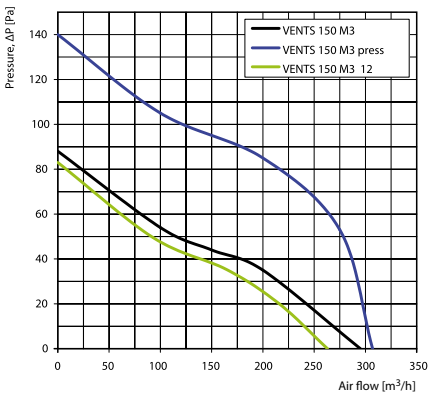

Technical data

Model	Frequency [Hz]	Voltage [V]	Power Consumption [W]	Current [A]	R.p.m.	Maximum air flow [m³/h]	Sound Pressure Level [dBA]*	Weight [kg]
VENTS 100 M3	50	220-240	14	0.085	2300	98	34	0.61
VENTS 100 M3 (220 V/60 Hz)	60	220						
VENTS 100 M3 turbo	50	220-240	16	0.1	2300	128	37	0.69
VENTS 100 M3 turbo (220 V/60 Hz)	60	220						
VENTS 100 M3 press	50	220-240	16	0.1	2300	99	37	0.69
VENTS 100 M3 press (220 V/60 Hz)	60	220						
VENTS 100 M3 12	50	12	14	1.5	2200	86	33	0.60
VENTS 125 M3	50	220-240	16	0.1	2400	185	35	0.80
VENTS 125 M3 (220 V/60 Hz)	60	220						
VENTS 125 M3 turbo	50	220-240	22	0.105	2400	232	40	0.86
VENTS 125 M3 turbo (220 V/60 Hz)	60	220						
VENTS 125 M3 press	50	220-240	22	0.105	2400	188	39	0.87
VENTS 125 M3 press (220 V/60 Hz)	60	220						
VENTS 125 M3 12	50	12	16	1.7	2300	165	34	0.78
VENTS 150 M3	50	220-240	24	0.13	2400	295	39	0.95
VENTS 150 M3 (220 V/60 Hz)	60	220						
VENTS 150 M3 press	50	220-240	29	0.13	2400	307	41	1.03
VENTS 150 M3 press (220 V/60 Hz)	60	220						
VENTS 150 M3 12	50	12	29	2	2300	263	38	0.91

*Sound pressure level measured in free space at a distance of 3 meters from the fan.

Mounting example



Overall dimensions

Model	Dimensions [mm]						
	Ø D	B	B1	H	H1	L	L1
VENTS 100 M3	100	185	155	256	226	86	30
VENTS 125 M3	125	185	155	256	226	89	30
VENTS 150 M3	150	185	155	256	226	114	30

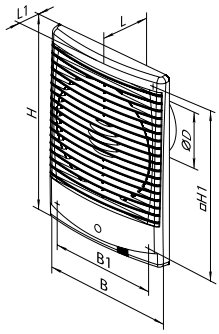

Certificates

IP34

The fans meet the applicable safety and electromagnetic compatibility standards.

VENTS M1
Series



Axial fans
for exhaust ventilation
with the capacity
up to 345 m³/h

Application

- Continuous or periodic exhaust ventilation of bathroom, showers, kitchens and other utility spaces.
- Ventilation shaft mounting or duct connection.
- Low to medium air flow motion for short distances at low air resistance.
- Compatible with Ø 100, 125 and 150 mm air ducts.

Design

- Modern design and aesthetic look.
- The casing and the impeller are made of high-quality durable ABS plastic, UV resistant.
- The intellectual impeller design makes the fan efficiency high and the service life long.
- Insect screen.
- Protection rating IP34.

Motor

- Reliable and low-watt electric motor.
- Designed for continuous operation and requires no maintenance.
- Equipped with overheating protection.

Modifications and Options

M1 K – fan is equipped with a backdraft damper for back flow preventing.

M1 L – The motor is equipped with ball bearings for long service life (appr. 40 thousand hours) and fan mounting at any angle. The bearings are maintenance-free and contain enough grease for the entire operating period.

M1 turbo – high-powered motor.

M1 press – 5-blade low-noise impeller with improved aerodynamics for higher fan capacity.

M1 12 – modification with low-voltage motor. 12 V AC power supply.

M1T – equipped with a regulated timer with the operating time from 2 to 30 minutes.

M1TH – equipped with a timer with the operating time from 2 to 30 minutes and a humidity sensor with the threshold value from 60 to 90 %.

M1V – equipped with a pull cord switch.

M1VT – equipped with a pull cord switch and a regulated timer with the operating time adjustable from 2 to 30 minutes.

M1VTH – equipped with a pull cord switch, regulated timer with the operating time adjustable from 2 to 30 minutes and a humidity sensor with the operating threshold range from 60 to 90 %.

M1TP – equipped with a regulated timer and a motion sensor with the sensitivity area from 1 to 4 m and the detection angle up to 100°.

Control

Manual:

- The fan is controlled by a room light switch. It is not included in the delivery package.
- The fan is controlled by the built-in pull cord switch **V**. Not applied in case of ceiling mounting.
- Speed control is possible through a thyristor speed controller (see Electrical Accessories). Several fans may connected to the same controller. Speed controllers can not be connected to the fans with T, TH, TP, VT, VTH modification.

Automatic:

- By the electronic control unit **BU–1–60** (see Electrical Accessories). The control unit is supplied separately.
- By the timer **T** (the built-in turn-off delay timer enables the fan operation within 2 to 30 minutes after the fan switching off).
- By the humidity sensor and timer **TH** (if the humidity level in the room exceeds the sensor threshold adjustable value within 60-90 % the fan switches automatically on and operates until the humidity level drops to the standard level, after that the fan continues operating within the time period according to the timer setting, then shuts down).
- By the motion sensor and the timer **TP** (in case of motion detection the fan switches automatically on and operates within the set time period from 2 to 30 minutes. The motion sensitivity area is up to 4 meters and the maximum detection angle is 100°).

Mounting features

- The fan is mounted directly into the ventilation shaft.
- Flexible duct application is recommended in case of remote location of the ventilation shaft. The air duct is connected to the fan exhaust flange through a clamp.
- Fixed to wall by self-tapping screws.
- For 12 V low-voltage motor fan connection to 220 V/50 Hz power mains use the step-down transformer TRF 220/12-25 that is available upon separate order.

Accessories

Air ducts | Grilles and hoods | Backdraft damper | Speed controllers | Clamps



Aerodynamic characteristics

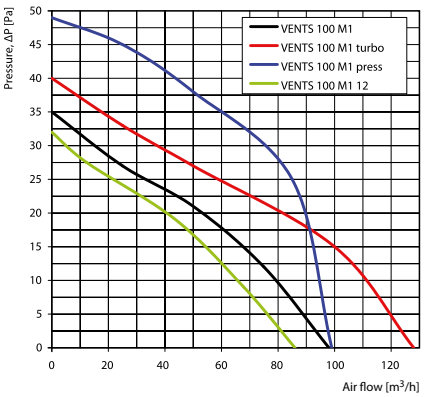

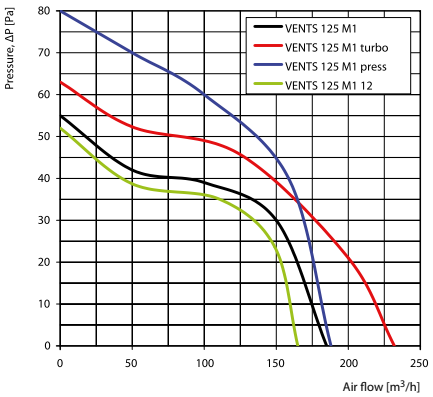

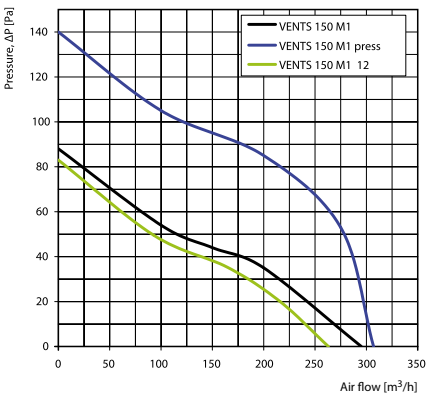

Technical data

Model	Frequency [Hz]	Voltage [V]	Power Consumption [W]	Current [A]	R.p.m.	Maximum air flow [m³/h]	Sound Pressure Level [dBA]*	Weight [kg]
VENTS 100 M1	50	220-240	14	0.085	2300	98	34	0.51
VENTS 100 M1 (220 V/60 Hz)	60	220						
VENTS 100 M1 turbo	50	220-240	16	0.1	2300	128	37	0.65
VENTS 100 M1 turbo (220 V/60 Hz)	60	220						
VENTS 100 M1 press	50	220-240	16	0.1	2300	99	37	0.65
VENTS 100 M1 press (220 V/60 Hz)	60	220						
VENTS 100 M1 12	50	12	14	1.5	2200	86	33	0.51
VENTS 125 M1	50	220-240	16	0.1	2400	185	35	0.68
VENTS 125 M1 (220 V/60 Hz)	60	220						
VENTS 125 M1 turbo	50	220-240	22	0.105	2400	232	40	0.81
VENTS 125 M1 turbo (220 V/60 Hz)	60	220						
VENTS 125 M1 press	50	220-240	22	0.105	2400	188	39	0.81
VENTS 125 M1 press (220 V/60 Hz)	60	220						
VENTS 125 M1 12	50	12	16	1.7	2300	165	34	0.68
VENTS 150 M1	50	220-240	24	0.13	2400	295	39	0.80
VENTS 150 M1 (220 V/60 Hz)	60	220						
VENTS 150 M1 press	50	220-240	29	0.13	2400	307	41	0.99
VENTS 150 M1 press (220 V/60 Hz)	60	220						
VENTS 150 M1 12	50	12	29	2	2300	262	38	0.76

*Sound pressure level measured in free space at a distance of 3 meters from the fan.

Mounting example

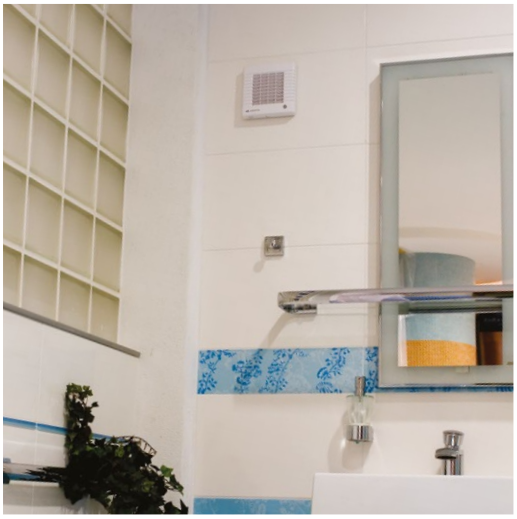

Overall dimensions

Model	Dimensions [mm]						
	Ø D	B	B1	B2	H	L	L1
VENTS 100 M1	100	165	150	150	150	92	32
VENTS 125 M1	125	190	174	128	173	98	33
VENTS 150 M1	150	212	196	150	195	114	33

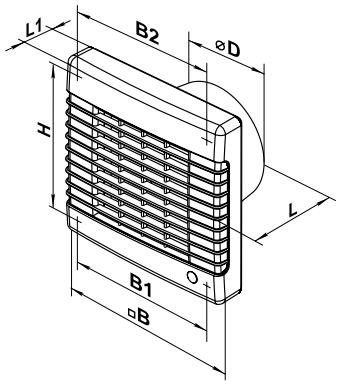

Certificates

IP34

The fans meet the applicable safety and electromagnetic compatibility standards.

VENTS MA
Series



Axial fans with automatic louver shutters for exhaust ventilation with the capacity up to 345 m³/h

Application

- Continuous or periodic exhaust ventilation of bathroom, showers, kitchens and other utility spaces.
- Ventilation shaft mounting or duct connection.
- Low to medium air flow motion for short distances at low air resistance.
- Compatible with Ø 100, 125 and 150 mm air ducts.

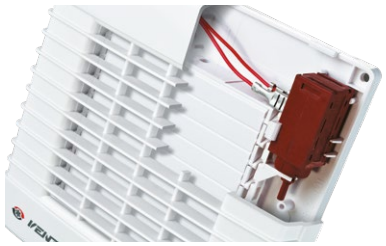

Fan OFF – louver shutters CLOSED

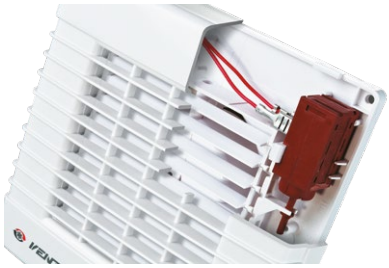

Fan ON – louver shutters OPEN

Design

- Modern design and aesthetic look.
- The casing and the impeller are made of high-quality durable ABS plastic, UV resistant.
- The intellectual impeller design makes the fan efficiency high and the service life long.
- Fan is equipped with a thermal actuator that provides smooth opening and shutting of automatic louver shutters for air back flow preventing.
- Protection rating IP24.

Motor

- Reliable and low-watt electric motor.
- Designed for continuous operation and requires no maintenance.
- Equipped with overheating protection.

Modifications and Options

MA L – the motor is equipped with ball bearings for long service life (appr. 40 thousand hours) and fan mounting at any angle. The bearings are maintenance-free and contain enough grease for the entire operating period.

MA turbo – high-powered motor.

MA press – 5-blade low-noise impeller with improved aerodynamics for higher fan capacity.

MA 12 – modification with low-voltage motor. 12 V AC power supply.

MAT – equipped with a regulated timer with the operating time from 2 to 30 minutes.

MATH – equipped with a timer with the operating time from 2 to 30 minutes and a humidity sensor with the threshold value from 60 to 90 %.

MAV – equipped with a pull cord switch.

MAVT – equipped with a pull cord switch and a regulated timer with the operating time adjustable from 2 to 30 minutes.

MAVTH – equipped with a pull cord switch, regulated timer with the operating time adjustable from 2 to 30 minutes and a humidity sensor with the operating threshold range from 60 to 90 %.

MATP – equipped with a regulated timer and a motion sensor with the sensitivity area from 1 to 4 m and the detection angle up to 100°.

Control

Manual:

- The fan is controlled by a room light switch. It is not included in the delivery package.
- The fan is controlled by the built-in pull cord switch **V**. Not applied in case of ceiling mounting.

Automatic:

- By the electronic control unit **BU–1–60** (see Electrical Accessories). The control unit is supplied separately.
- By the timer **T** (the built-in turn-off delay timer enables the fan operation within 2 to 30 minutes after the fan switching off).
- By the humidity sensor and timer **TH** (if the humidity level in the room exceeds the sensor threshold adjustable value within 60-90 % the fan switches automatically on and operates until the humidity level drops to the standard level, after that the fan continues operating within the time period according to the timer setting, then shuts down).
- By the motion sensor and the timer **TP** (in case of motion detection the fan switches automatically on and operates within the set time period from 2 to 30 minutes. The motion sensitivity area is up to 4 meters and the maximum detection angle is 100°).

Mounting features

- The fan is mounted directly into the ventilation shaft.
- Flexible duct application is recommended in case of remote location of the ventilation shaft. The air duct is connected to the fan exhaust flange through a clamp.
- Fixed to wall by self-tapping screws.
- Suitable for ceiling mounting.
- Flange of 92 mm length for easy mounting into concrete walls and floor decks up to 100 mm thick.
- For 12 V low-voltage motor fan connection to 220 V/50 Hz power mains use the step-down transformer TRF 220/12-25 that is available upon separate order.

Accessories

Air ducts | Grilles and hoods | Speed controllers | Clamps



Aerodynamic characteristics

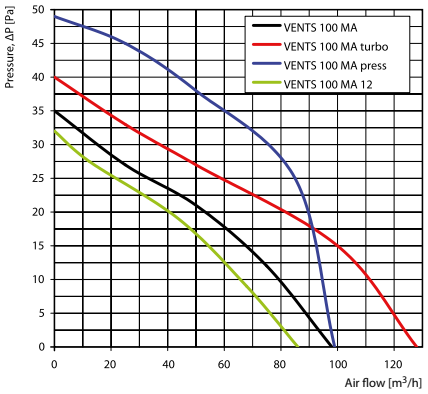

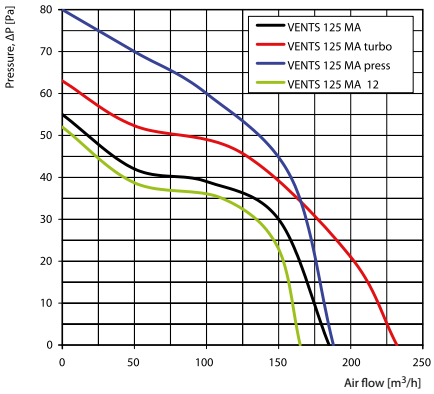

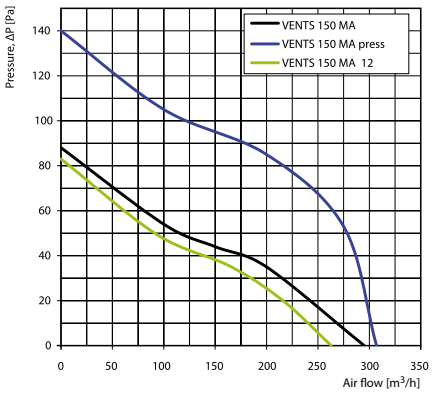

Technical data

Model	Frequency [Hz]	Voltage [V]	Power Consumption [W]	Current [A]	R.p.m.	Maximum air flow [m³/h]	Sound Pressure Level [dBA]*	Weight [kg]
VENTS 100 MA	50	220-240	18	0.085	2300	98	34	0.65
VENTS 100 MA (220 V/60 Hz)	60	220						
VENTS 100 MA turbo	50	220-240	20	0.1	2300	128	37	0.65
VENTS 100 MA turbo (220 V/60 Hz)	60	220						
VENTS 100 MA press	50	220-240	20	0.1	2300	99	37	0.65
VENTS 100 MA press (220 V/60 Hz)	60	220						
VENTS 100 MA 12	50	12	18	1.5	2200	86	33	0.65
VENTS 125 MA	50	220-240	22	0.1	2400	185	35	0.75
VENTS 125 MA (220 V/60 Hz)	60	220						
VENTS 125 MA turbo	50	220-240	29	0.13	2400	232	37	0.81
VENTS 125 MA turbo (220 V/60 Hz)	60	220						
VENTS 125 MA press	50	220-240	29	0.13	2400	188	39	0.81
VENTS 125 MA press (220 V/60 Hz)	60	220						
VENTS 125 MA 12	50	12	22	1.7	2300	165	34	0.75
VENTS 150 MA	50	220-240	26	0.13	2400	295	39	1.02
VENTS 150 MA (220 V/60 Hz)	60	220						
VENTS 150 MA press	50	220-240	32	0.14	2400	307	41	0.99
VENTS 150 MA press (220 V/60 Hz)	60	220						
VENTS 150 MA 12	50	12	29	2	2300	263	38	0.98

*Sound pressure level measured in free space at a distance of 3 meters from the fan.

Mounting example



Overall dimensions

Model	Dimensions [mm]						
	Ø D	B	B1	B2	H	L	L1
VENTS 100 MA	100	165	150	150	150	92	32
VENTS 125 MA	125	190	174	128	173	98	33
VENTS 150 MA	150	212	196	150	195	114	33

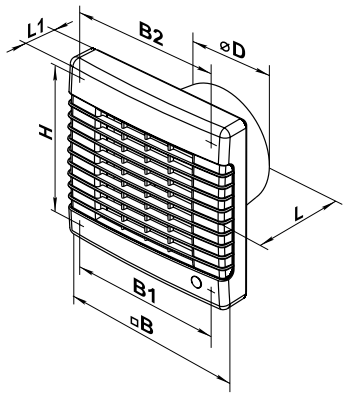

Certificates

IP24

The fans meet the applicable safety and electromagnetic compatibility standards.

VENTS X1
Series



Axial fans
for exhaust ventilation with the capacity up to 345 m³/h

Application

- Continuous or periodic exhaust ventilation of bathroom, showers, kitchens and other utility spaces.
- Ventilation shaft mounting or duct connection.
- Low to medium air flow motion for short distances at low air resistance.
- Compatible with Ø 100, 120, 125 and 150 mm air ducts.



Design

- Modern design and aesthetic look.
- The casing and the impeller are made of high-quality durable ABS plastic, UV resistant.
- The intellectual impeller design makes the fan efficiency high and the service life long.
- Protection rating IP24.

Motor

- Reliable and low-watt electric motor.
- Designed for continuous operation and requires no maintenance.
- Equipped with overheating protection.

Modifications and Options

X1 K – fan is equipped with a backdraft damper for back flow preventing.

X1 L – the motor is equipped with ball bearings for long service life (appr. 40 thousand hours) and fan mounting at any angle. The bearings are maintenance-free and contain enough grease for the entire operating period.

X1 turbo – high-powered motor.

X1 12 – modification with low-voltage motor. 12 V AC power supply.

X1T – equipped with a regulated timer with the operating time from 2 to 30 minutes.

X1TH – equipped with a timer with the operating time from 2 to 30 minutes and a humidity sensor with the threshold value from 60 to 90 %.

X1V – equipped with a pull cord switch.

X1VT – equipped with a pull cord switch and a regulated timer with the operating time adjustable from 2 to 30 minutes.

X1VTH – equipped with a pull cord switch, regulated timer with the operating time adjustable from 2 to 30 minutes and a humidity sensor with the operating threshold range from 60 to 90 %.

Control

Manual:

- The fan is controlled by a room light switch. It is not included in the delivery package.
- The fan is controlled by the built-in pull cord switch **V**. Not applied in case of ceiling mounting.
- Speed control is possible through a thyristor speed controller (see Electrical Accessories). Several fans may connected to the same controller. Speed controllers can not be connected to the fans with T, TH, TP, VT, VTH modification.

Automatic:

- By the electronic control unit **BU–1–60** (see Electrical Accessories). The control unit is supplied separately.
- By the timer **T** (the built-in turn-off delay timer enables the fan operation within 2 to 30 minutes after the fan switching off).
- By the humidity sensor and timer **TH** (if the humidity level in the room exceeds the sensor threshold adjustable value within 60-90 % the fan switches automatically on and operates until the humidity level drops to the standard level, after that the fan continues operating within the time period according to the timer setting, then shuts down).

Mounting features

- The fan is mounted directly into the ventilation shaft.
- Flexible duct application is recommended in case of remote location of the ventilation shaft. The air duct is connected to the fan exhaust flange through a clamp.
- Fixed to wall by self-tapping screws.
- Suitable for ceiling mounting.
- For 12 V low-voltage motor fan connection to 220 V/50 Hz power mains use the step-down transformer TRF 220/12-25 that is available upon separate order.

Accessories

Air ducts | Grilles and hoods | Backdraft damper | Speed controllers | Clamps



Aerodynamic characteristics

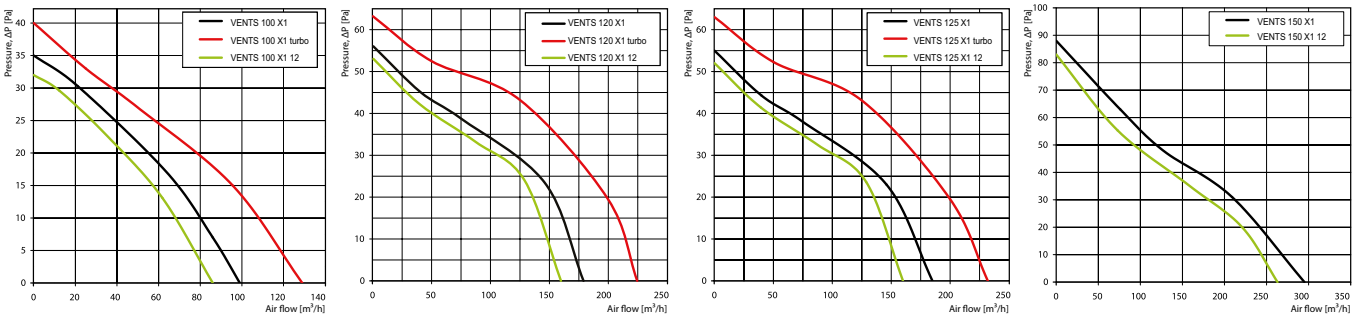

Technical data

Model	Frequency [Hz]	Voltage [V]	Power Consumption [W]	Current [A]	R.p.m.	Maximum air flow [m³/h]	Sound Pressure Level [dBA]*	Weight [kg]
VENTS 100 X1	50	220-240	14	0.085	2300	99	33	0.60
VENTS 100 X1 (220 V/60 Hz)	60	220						
VENTS 100 X1 turbo	50	220-240	16	0.1	2300	129	37	0.68
VENTS 100 X1 turbo (220 V/60 Hz)	60	220						
VENTS 100 X1 12	50	12	14	1.5	2200	86	33	0.59
VENTS 120 X1	50	220-240	17	0.1	2400	179	35	0.73
VENTS 120 X1 (220 V/60 Hz)	60	220						
VENTS 120 X1 turbo	50	220-240	24	0.105	2400	225	37	0.80
VENTS 120 X1 turbo (220 V/60 Hz)	60	220						
VENTS 120 X1 12	50	12	16	1.7	2300	160	34	0.71
VENTS 125 X1	50	220-240	16	0.1	2400	185	34	0.73
VENTS 125 X1 (220 V/60 Hz)	60	220						
VENTS 125 X1 turbo	50	220-240	24	0.105	2400	232	37	0.80
VENTS 125 X1 turbo (220 V/60 Hz)	60	220						
VENTS 125 X1 12	50	12	16	1.7	2300	160	34	0.71
VENTS 150 X1	50	220-240	24	0.13	2400	295	37	0.92
VENTS 150 X1 (220 V/60 Hz)	60	220						
VENTS 150 X1 12	50	12	29	2	2300	263	36	0.88

*Sound pressure level measured in free space at a distance of 3 meters from the fan.

Mounting example

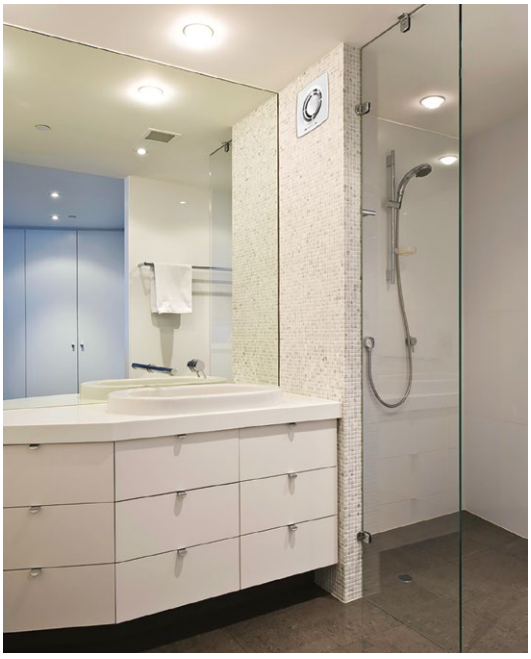

Overall dimensions

Model	Dimensions [mm]				
	Ø D	B	H	L	L1
VENTS 100 X1	100	152	120	108	12
VENTS 120 X1	120	177	140	95	13
VENTS 125 X1	125	177	140	114	13
VENTS 150 X1	150	205	165	132	13

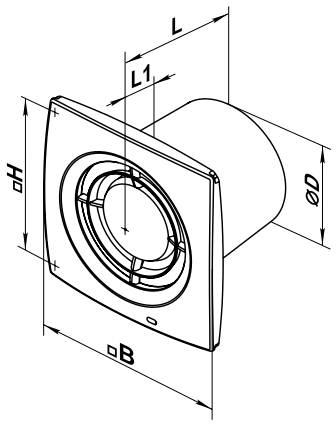

Certificates

IP 24

The fans meet the applicable safety and electromagnetic compatibility standards.

VENTS Simple Series



Axial fans
for exhaust ventilation
with air capacity
up to 280 m³/h

Application

- Continuous or periodic exhaust ventilation of bathroom, showers, kitchens and other utility spaces.
- Ventilation shaft mounting or duct connection.
- Low to medium air flow motion for short distances at low air resistance.
- Compatible with Ø 100, 120, 125 and 150 mm air ducts.

Design

- Modern design and aesthetic look.
- The casing and the impeller are made of high-quality durable ABS plastic, UV resistant.
- The intellectual impeller design makes the fan efficiency high and the service life long.
- Insect screen.
- Protection rating IP34.

Motor

- Reliable and low-watt electric motor.
- Designed for continuous operation and requires no maintenance.
- Equipped with overheating protection.

Modifications and Options

Simple K – fan is equipped with a backdraft damper for back flow preventing.

Simple L – the motor is equipped with ball bearings for long service life (appr. 40 thousand hours) and fan mounting at any angle. The bearings are maintenance-free and contain enough grease for the entire operating period.

Simple turbo – high-powered motor.

Simple T – equipped with a regulated timer with the operating time from 2 to 30 minutes.

Simple TH – equipped with a timer with the operating time from 2 to 30 minutes and a humidity sensor with the threshold value from 60 to 90 %.

Simple V – equipped with a pull cord switch.

Simple VT – equipped with a pull cord switch and a regulated timer with the operating time adjustable from 2 to 30 minutes.

Simple VTH – equipped with a pull cord switch, regulated timer with the operating time adjustable from 2 to 30 minutes and a humidity sensor with the operating threshold range from 60 to 90 %.

Control

Manual:

- The fan is controlled by a room light switch. It is not included in the delivery set.
- The fan is controlled by the built-in **V** pull cord switch. Not applied in case of ceiling mounting.
- Speed control is possible through a thyristor speed controller (see Electrical Accessories). Several fans may be connected to the same controller. Speed controllers can not be connected to the fans with the T, TH, TP, VT, VTH modifications.

Automatic:

- By the **BU-1-60** electronic control unit (see Electrical Accessories). The control unit is supplied separately.
- By the **T** timer (the built-in turn-off delay timer enables the fan operation within 2 to 30 minutes after the fan switching off).
- By the humidity sensor and the **TH** timer (if the humidity level in the room exceeds the sensor threshold adjustable value within 60-90 %, the fan switches automatically on and operates until the humidity level drops to the standard level, after that the fan continues operating within the time period according to the timer setting, then shuts down).

Mounting features

- The fan is mounted directly into the ventilation shaft.
- In case of remote location of the ventilation shaft flexible air ducts may be used. The air duct is connected to the fan exhaust flange through a clamp.
- Fixed to the wall by means of screws.
- Can be ceiling mounted in case the fan is ordered with ball bearings (Simple L modification).

Accessories

Air ducts | Grilles and hoods | Backdraft damper | Speed controllers | Clamps



Aerodynamic characteristics

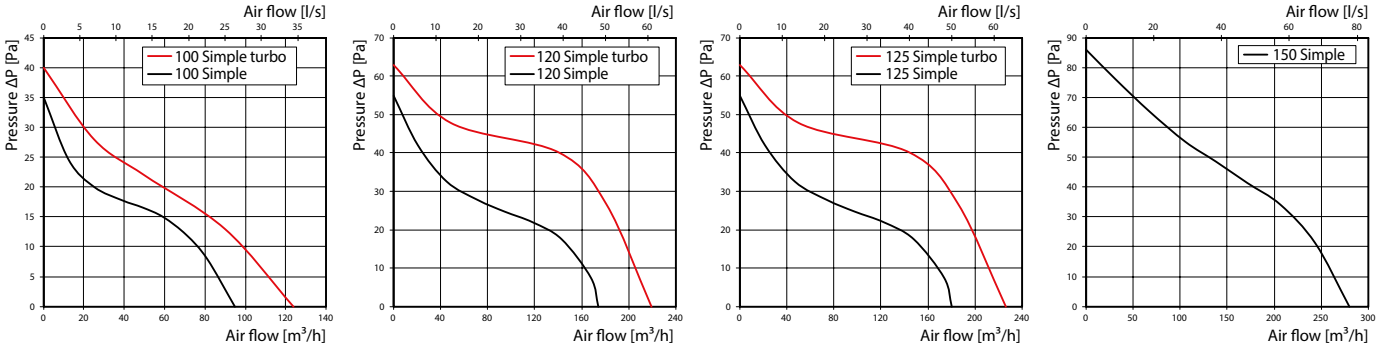

Technical data

Model	Frequency	Voltage	Power Consumption	Current	Maximum Air Flow		Specific Power	Sound Pressure Level	Weight	IP
	[Hz]	[V]	[W]	[A]	[m³/h]	[l/s]	[W/l/s]	[dBA]*	[kg]	
VENTS 100 Simple	50	220-240	14	0.09	95	26	0.53	34	0.58	IP34
	60	220								
VENTS 100 Simple turbo	50	220-240	16	0.01	124	34	0.46	37	0.66	IP34
	60	220								
VENTS 120 Simple	50	220-240	16	0.09	174	48	0.33	35	0.74	IP34
	60	220								
VENTS 120 Simple turbo	50	220-240	24	0.1	219	61	0.39	37	0.81	IP34
	60	220								
VENTS 125 Simple	50	220-240	16	0.1	180	50	0.32	35	0.74	IP34
	60	220								
VENTS 125 Simple turbo	50	220-240	24	0.105	226	63	0.38	37	0.81	IP34
	60	220								
VENTS 150 Simple	50	220-240	25	0.17	280	78	0.32	34	0.92	IP34
	60	220								

*Sound pressure level measured in free space at a distance of 3 meters from the fan.

Mounting example



Overall dimensions

Model	Dimensions [mm]				
	Ø D	B	H	L	L1
VENTS 100 Simple	100	150	125	97	15
VENTS 120 Simple	120	175	140	94	15
VENTS 125 Simple	125	175	140	101	15
VENTS 150 Simple	150	205	165	117	15

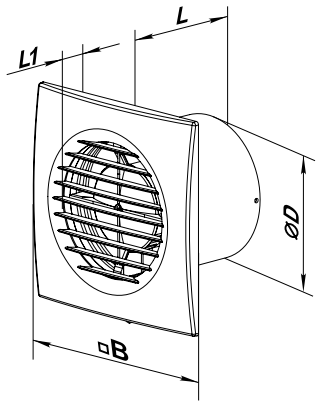

Certificates

IP34 The fans meet the applicable safety and electromagnetic compatibility standards.

VENTS F
Series



Axial fans
for exhaust ventilation
with the capacity up to 232 m³/h

Application

- Continuous or periodic exhaust ventilation of bathroom, showers, kitchens and other utility spaces.
- Ventilation shaft mounting or duct connection.
- For rectangular ventilation shafts.
- Low to medium air flow motion for short distances at low air resistance.
- Compatible with Ø 100 and 125 mm air ducts.

Design

- Modern design and aesthetic look.
- The casing and the impeller are made of high-quality durable ABS plastic, UV resistant.
- The intellectual impeller design makes the fan efficiency high and the service life long.
- The special front grille design enables natural ventilation of the premises without powering up the fan if required.
- Insect screen.
- Protection rating IP34.
- Ventilation grille for natural air exhaust for application in premises with gas stoves.

Motor

- Reliable and low-watt electric motor.
- Designed for continuous operation and requires no maintenance.
- Equipped with overheating protection.

Modifications and Options

F L – the motor is equipped with ball bearings for long service life (appr. 40 thousand hours) and fan mounting at any angle. The bearings are maintenance-free and contain enough grease for the entire operating period.

F turbo – high-powered motor.

F 12 – modification with low-voltage motor. 12 V AC power supply.

Control

Manual:

- The fan is controlled by a room light switch. It is not included in the delivery package.
- Speed control is possible through a thyristor speed controller (see Electrical Accessories). Several fans may connected to the same controller. Speed controllers can not be connected to the fans with T, TH, TP, VT, VTH modification.

Automatic:

- By the electronic control unit **BU–1–60** (see Electrical Accessories). The control unit is supplied separately.

Mounting features

- The fan is mounted directly into the ventilation shaft.
- Flexible duct application is recommended in case of remote location of the ventilation shaft. The air duct is connected to the fan exhaust flange through a clamp.
- Fixed to wall by self-tapping screws.
- For 12 V low-voltage motor fan connection to 220 V/50 Hz power mains use the step-down transformer TRF 220/12-25 that is available upon separate order.

Accessories

Air ducts | Grilles and hoods | Backdraft damper | Speed controllers | Clamps



Aerodynamic characteristics

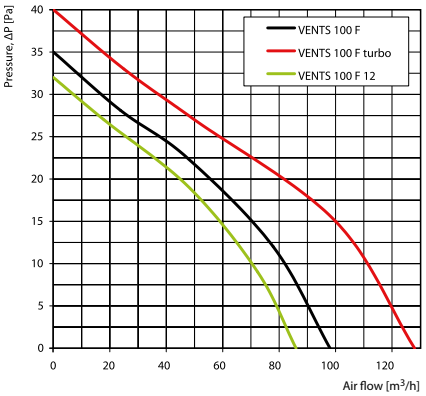

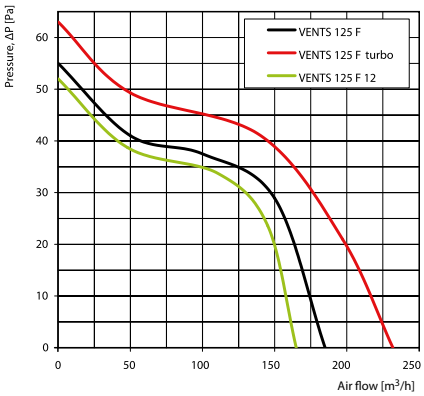

Technical data

Model	Frequency [Hz]	Voltage [V]	Power Consumption [W]	Current [A]	R.p.m.	Maximum air flow [m³/h]	Sound Pressure Level [dBA]*	Weight [kg]
VENTS 100 F	50	220-240	14	0.085	2300	98	34	0.64
VENTS 100 F (220 V/60 Hz)	60	220						
VENTS 100 F turbo	50	220-240	16	0.1	2300	128	37	0.72
VENTS 100 F turbo (220 V/60 Hz)	60	220						
VENTS 100 F 12	50	12	14	1.5	2200	86	33	0.63
VENTS 125 F	50	220-240	16	0.1	2400	185	35	0.70
VENTS 125 F (220 V/60 Hz)	60	220						
VENTS 125 F turbo	50	220-240	24	0.1	2400	232	37	0.77
VENTS 125 F turbo (220 V/60 Hz)	60	220						
VENTS 125 F 12	50	12	16	1.7	2300	165	34	0.68

*Sound pressure level measured in free space at a distance of 3 meters from the fan.

Mounting example



Overall dimensions

Model	Dimensions [mm]							
	Ø D	B	B1	B2	H	H1	L	L1
VENTS 100 F	100	182	152	160	252	226	104	13
VENTS 125 F	125	182	152	160	252	226	110	15

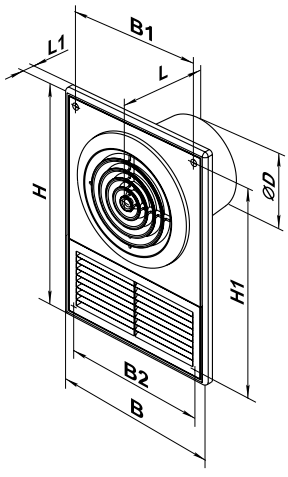

Certificates

IP34

The fans meet the applicable safety and electromagnetic compatibility standards.

VENTS K
Series



Axial fans
for exhaust ventilation
with the capacity up to 341 m³/h

Application

- Continuous or periodic exhaust ventilation of bathroom, showers, kitchens and other utility spaces.
- Ventilation shaft mounting or duct connection.
- Low to medium air flow motion for short distances at low air resistance.
- Compatible with Ø 100, 125 and 150 mm air ducts.

Design

- Classic design and aesthetic look.
- The casing and the impeller are made of high-quality durable ABS plastic, UV resistant.
- The intellectual impeller design makes the fan efficiency high and the service life long.
- Insect screen.
- Protection rating IP34.

Motor

- Reliable and low-watt electric motor.
- Designed for continuous operation and requires no maintenance.
- Equipped with overheating protection.

Modifications and Options

K L – the motor is equipped with ball bearings for long service life (appr. 40 thousand hours) and fan mounting at any angle. The bearings are maintenance-free and contain enough grease for the entire operating period.

K turbo – high-powered motor.

K 12 – modification with low-voltage motor. 12 V AC power supply.

Control

Manual:

- The fan is controlled by a room light switch. It is not included in the delivery package.
- Speed control is possible through a thyristor speed controller (see Electrical Accessories). Several fans may connected to the same controller. Speed controllers can not be connected to the fans with T, TH, TP, VT, VTH modification.

Automatic:

- By the electronic control unit **BU–1–60** (see Electrical Accessories). The control unit is supplied separately.

Mounting features

- The fan is mounted directly into the ventilation shaft.
- Flexible duct application is recommended in case of remote location of the ventilation shaft. The air duct is connected to the fan exhaust flange through a clamp.
- Fixed to wall by self-tapping screws.
- Suitable for ceiling mounting.
- For 12 V low-voltage motor fan connection to 220 V/50 Hz power mains use the step-down transformer TRF 220/12-25 that is available upon separate order.

Accessories

Air ducts | Grilles and hoods | Backdraft damper | Speed controllers | Clamps



Aerodynamic characteristics

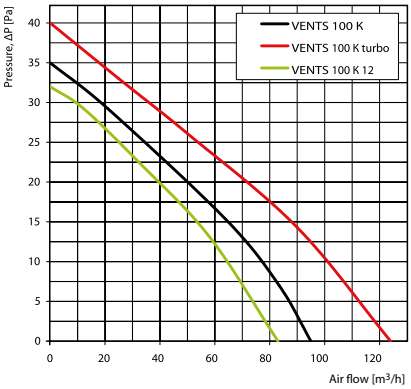

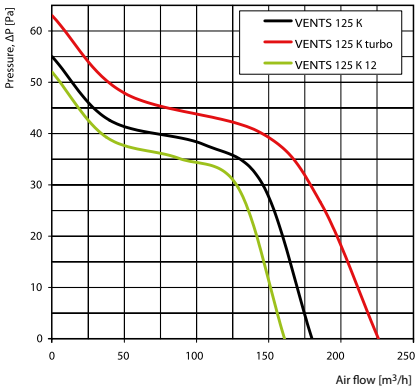

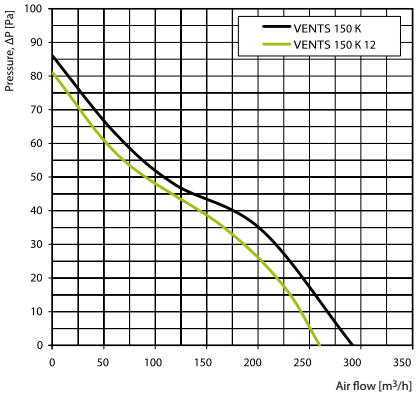

Technical data

Model	Frequency [Hz]	Voltage [V]	Power Consumption [W]	Current [A]	R.p.m.	Maximum air flow [m³/h]	Sound Pressure Level [dBA]*	Weight [kg]
VENTS 100 K	50	220-240	14	0.085	2300	95	34	0.53
VENTS 100 K (220 V/60 Hz)	60	220						
VENTS 100 K turbo	50	220-240	16	0.1	2300	124	37	0.61
VENTS 100 K turbo (220 V/60 Hz)	60	220						
VENTS 100 K 12	50	12	14	1.5	2200	83	33	0.52
VENTS 125 K	50	220-240	16	0.1	2400	180	35	0.65
VENTS 125 K (220 V/60 Hz)	60	220						
VENTS 125 K turbo	50	220-240	24	0.105	2400	226	37	0.72
VENTS 125 K turbo (220 V/60 Hz)	60	220						
VENTS 125 K 12	50	12	16	1.7	2300	161	34	0.63
VENTS 150 K	50	220-240	24	0.13	2400	292	38	1.07
VENTS 150 K (220 V/60 Hz)	60	220						
VENTS 150 K 12	50	12	29	2	2300	260	37	1.03

*Sound pressure level measured in free space at a distance of 3 meters from the fan.

Mounting example



Overall dimensions

Model	Dimensions [mm]				
	Ø D	B	H	L	L1
VENTS 100 K	100	154	110	105	15
VENTS 125 K	125	187	142	112	15
VENTS 150 K	150	250	214	127	15

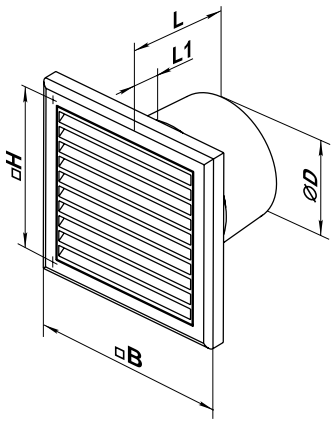

Certificates

IP34

The fans meet the applicable safety and electromagnetic compatibility standards.

VENTS K1
Series



Axial fans
for exhaust ventilation
with the capacity up to 226 m³/h

Application

- Continuous or periodic exhaust ventilation of bathroom, showers, kitchens and other utility spaces.
- Ventilation shaft mounting or duct connection.
- Low to medium air flow motion for short distances at low air resistance.
- Compatible with Ø 100 and 125 mm air ducts.

Design

- Classic design and aesthetic look.
- The casing and the impeller are made of high-quality durable ABS plastic, UV resistant.
- The intellectual impeller design makes the fan efficiency high and the service life long.
- Insect screen.
- Protection rating IP34.

Motor

- Reliable and low-watt electric motor.
- Designed for continuous operation and requires no maintenance.
- Equipped with overheating protection.

Modifications and Options

K1 L – The motor is equipped with ball bearings for long service life (appr. 40 thousand hours) and fan mounting at any angle. The bearings are maintenance-free and contain enough grease for the entire operating period.

K1 turbo – high-powered motor.

K1 12 – modification with low-voltage motor. 12 V AC power supply.

Control

Manual:

- The fan is controlled by a room light switch. It is not included in the delivery package.
- Speed control is possible through a thyristor speed controller (see Electrical Accessories). Several fans may connected to the same controller. Speed controllers can not be connected to the fans with T, TH, TP, VT, VTH modification.

Automatic:

- By the electronic control unit **BU–1–60** (see Electrical Accessories). The control unit is supplied separately.

Mounting features

- The fan is mounted directly into the ventilation shaft.
- Flexible duct application is recommended in case of remote location of the ventilation shaft. The air duct is connected to the fan exhaust flange through a clamp.
- Fixed to wall by self-tapping screws.
- Suitable for ceiling mounting.
- For 12 V low-voltage motor fan connection to 220 V/50 Hz power mains use the step-down transformer TRF 220/12-25 that is available upon separate order.

Accessories

Air ducts | Grilles and hoods | Backdraft damper | Speed controllers | Clamps



Aerodynamic characteristics

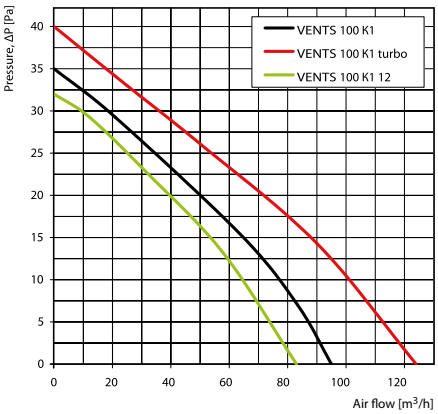

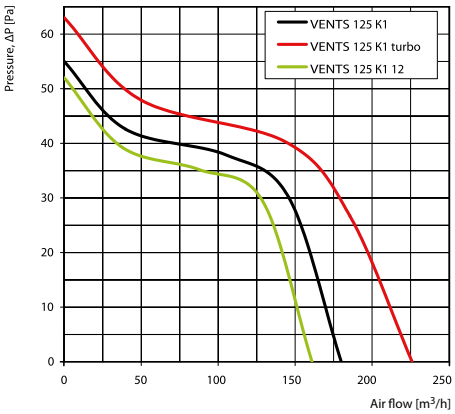

Technical data

Model	Frequency [Hz]	Voltage [V]	Power Consumption [W]	Current [A]	R.p.m.	Maximum air flow [m³/h]	Sound Pressure Level [dBA]*	Weight [kg]
VENTS 100 K1	50	220-240	14	0.085	2300	95	34	0.52
VENTS 100 K1 (220 V/60 Hz)	60	220						
VENTS 100 K1 turbo	50	220-240	16	0.1	2300	124	37	0.60
VENTS 100 K1 turbo (220 V/60 Hz)	60	220						
VENTS 100 K1 12	50	12	14	1.5	2200	83	33	0.50
VENTS 125 K1	50	220-240	16	0.1	2400	180	35	0.70
VENTS 125 K1 (220 V/60 Hz)	60	220						
VENTS 125 K1 turbo	50	220-240	24	0.105	2400	226	37	0.77
VENTS 125 K1 turbo (220 V/60 Hz)	60	220						
VENTS 125 K1 12	50	12	16	1.7	2300	161	34	0.66

*Sound pressure level measured in free space at a distance of 3 meters from the fan.

Mounting example



Overall dimensions

Model	Dimensions [mm]				
	Ø D	B	H	L	L1
VENTS 100 K1	100	154	110	108.5	18.5
VENTS 125 K1	125	187	142	116	19

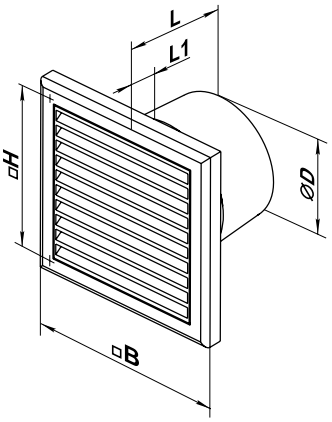

Certificates

IP34

The fans meet the applicable safety and electromagnetic compatibility standards.

VENTS PF
Series



Axial fans for exhaust ventilation with air capacity up to 342 m³/h

Application

- Continuous or periodic exhaust ventilation of bathroom, showers, kitchens and other utility spaces.
- Ventilation shaft mounting or duct connection.
- Low to medium air flow motion for short distances at low air resistance.
- Compatible with Ø 100, 125 and 150 mm air ducts.

Design

- Modern design and aesthetic look.
- The casing and the impeller are made of high-quality durable ABS plastic, UV resistant.
- The intellectual impeller design makes the fan efficiency high and the service life long.
- Insect screen.
- Protection rating IP34.

Motor

- Reliable and low-watt electric motor.
- Designed for continuous operation and requires no maintenance.
- Equipped with overheating protection.

Modifications and Options

PF L – the motor is equipped with ball bearings for long service life (appr. 40 thousand hours) and fan mounting at any angle. The bearings are maintenance-free and contain enough grease for the entire operating period.

PF turbo – high-powered motor.

PF press – 5-blade low-noise impeller with improved aerodynamics for higher fan capacity.

PF 12 – modification with low-voltage motor. 12 V AC power supply.

Control

Manual:

- The fan is controlled by a room light switch. It is not included in the delivery set.
- Speed control is possible through a thyristor speed controller (see Electrical Accessories). Several fans may be connected to the same controller. Speed controllers can not be connected to the fans with the T, TH, TP, VT, VTH modifications.

Automatic:

- By the **BU-1-60** electronic control unit (see Electrical Accessories). The control unit is supplied separately.

Mounting features

- The fan is mounted directly into the ventilation shaft.
- In case of remote location of the ventilation shaft flexible air ducts may be used. The air duct is connected to the fan exhaust flange through a clamp.
- Fixed to wall by self-tapping screws.
- Suitable for ceiling mounting.
- To connect a fan with a 12 V low voltage motor to 220 V/50 Hz power mains, it is necessary to purchase a step-down transformer (e.g. the TRF 220/12-25 transformer).

Accessories

Air ducts | Grilles and hoods | Backdraft damper | Speed controllers | Clamps



Aerodynamic characteristics

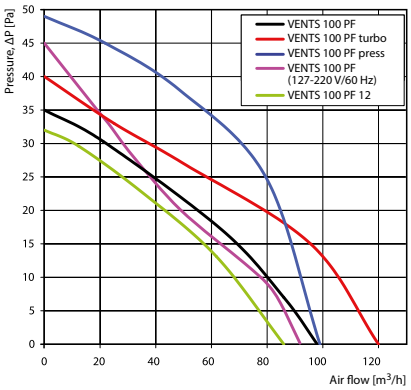

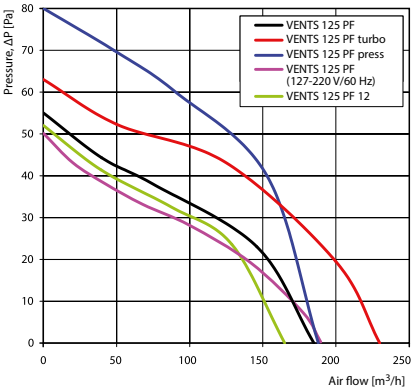

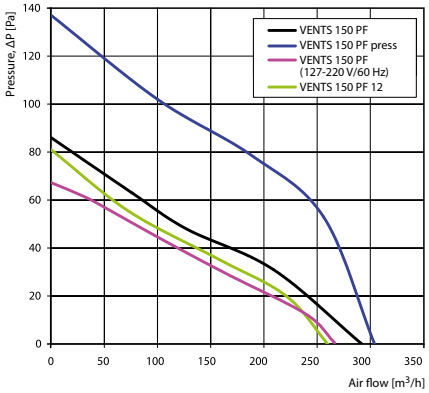

Technical data

Model	Frequency [Hz]	Voltage [V]	Power Consumption [W]	Current [A]	R.p.m.	Maximum air flow [m³/h]	Sound Pressure Level [dBA]*	Weight [kg]
VENTS 100 PF	50	220-240	14	0.085	2300	98	34	0.47
VENTS 100 PF (220 V/60 Hz)	60	220						
VENTS 100 PF turbo	50	220-240	16	0.1	2300	120	40	0.52
VENTS 100 PF turbo (220 V/60 Hz)	60	220						
VENTS 100 PF press	50	220-240	16	0.1	2300	99	38	0.47
VENTS 100 PF press (220 V/60 Hz)	60	220						
VENTS 100 PF (127-220 V/60 Hz)	60	127	10	0.115	2500	92	34	0.47
		220	9	0.054				
VENTS 100 PF 12	50	12	14	1.5	2200	86	33	0.46
VENTS 125 PF	50	220-240	16	0.1	2400	185	35	0.58
VENTS 125 PF (220 V/60 Hz)	60	220						
VENTS 125 PF turbo	50	220-240	24	0.1	2400	230	42	0.60
VENTS 125 PF turbo (220 V/60 Hz)	60	220						
VENTS 125 PF press	50	220-240	24	0.105	2400	188	39	0.58
VENTS 125 PF press (220 V/60 Hz)	60	220						
VENTS 125 PF (127-220 V/60 Hz)	60	127	16	0.119	2400	190	36	0.58
		220	15	0.102				
VENTS 125 PF 12	50	12	16	1.7	2300	165	34	0.56
VENTS 150 PF	50	220-240	24	0.13	2400	292	38	0.90
VENTS 150 PF (220 V/60 Hz)	60	220						
VENTS 150 PF press	50	220-240	29	0.13	2400	304	40	0.90
VENTS 150 PF press (220 V/60 Hz)	60	220						
VENTS 150 PF (127-220 V/60 Hz)	60	127	25	0.338	2350	267	38	0.90
		220	25	0.175				
VENTS 150 PF 12	50	12	29	2	2300	260	37	0.74

*Sound pressure level measured in free space at a distance of 3 meters from the fan.

Mounting example



Overall dimensions

Model	Dimensions [mm]			
	Ø D	Ø D1	L	L1
VENTS 100 PF	100	141	104	13
VENTS 125 PF	125	166	110	15
VENTS 150 PF	150	188	125	15

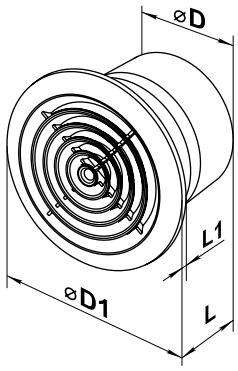

Certificates

IP34

The fans meet the applicable safety and electromagnetic compatibility standards.

VENTS S
Series



Axial fans
for exhaust ventilation
with the capacity up to 341 m³/h

Application

- Continuous or periodic exhaust ventilation of bathroom, showers, kitchens and other utility spaces.
- Ventilation shaft mounting or duct connection.
- Low to medium air flow motion for short distances at low air resistance.
- Compatible with Ø 100, 120, 125 and 150 mm air ducts.



Design

- Modern design and aesthetic look.
- The casing and the impeller are made of high-quality durable ABS plastic, UV resistant.
- The intellectual impeller design makes the fan efficiency high and the service life long.
- Ultra thin front panel.
- Insect screen.
- Protection rating IP34.

Motor

- Reliable and low-watt electric motor.
- Designed for continuous operation and requires no maintenance.
- Equipped with overheating protection.

Modifications and Options

S1 – shortened flange model.

S K – fan is equipped with a backdraft damper for back flow preventing.

S L – the motor is equipped with ball bearings for long service life (appr. 40 thousand hours) and fan mounting at any angle. The bearings are maintenance-free and contain enough grease for the entire operating period.

S turbo – high-powered motor.

S 12 – modification with low-voltage motor. 12 V AC power supply.

ST – equipped with a regulated timer with the operating time from 2 to 30 minutes.

STH – equipped with a timer with the operating time from 2 to 30 minutes and a humidity sensor with the threshold value from 60 to 90 %.

SV – equipped with a pull cord switch.

SVT – equipped with a pull cord switch and a regulated timer with the operating time adjustable from 2 to 30 minutes.

SVTH – equipped with a pull cord switch, regulated timer with the operating time adjustable from 2 to 30 minutes and a humidity sensor with the operating threshold range from 60 to 90 %.

Control

Manual:

- The fan is controlled by a room light switch. It is not included in the delivery package.
- The fan is controlled by the built-in pull cord switch **V**. Not applied in case of ceiling mounting.
- Speed control is possible through a thyristor speed controller (see Electrical Accessories). Several fans may connected to the same controller. Speed controllers can not be connected to the fans with T, TH, TP, VT, VTH modification.

Automatic:

- By the electronic control unit **BU-1-60** (see Electrical Accessories). The control unit is supplied separately.
- By the timer **T** (the built-in turn-off delay timer enables the fan operation within 2 to 30 minutes after the fan switching off).
- By the humidity sensor and timer **TH** (if the humidity level in the room exceeds the sensor threshold adjustable value within 60-90 % the fan switches automatically on and operates until the humidity level drops to the standard level, after that the fan continues operating within the time period according to the timer setting, then shuts down).

Mounting features

- The fan is mounted directly into the ventilation shaft.
- Flexible duct application is recommended in case of remote location of the ventilation shaft. The air duct is connected to the fan exhaust flange through a clamp.
- Fixed to wall by self-tapping screws.
- Suitable for ceiling mounting.
- For 12 V low-voltage motor fan connection to 220 V/50 Hz power mains use the step-down transformer TRF 220/12-25 that is available upon separate order.

Accessories

Air ducts | Grilles and hoods | Backdraft damper | Speed controllers | Clamps



Aerodynamic characteristics

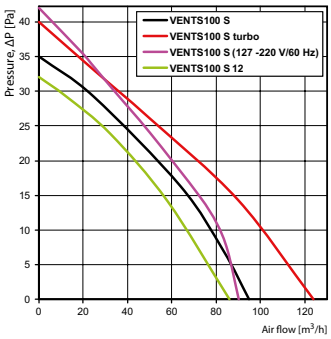

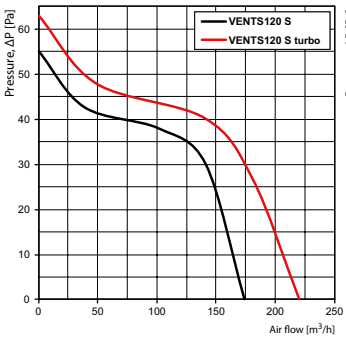

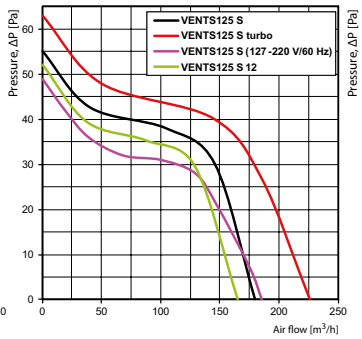

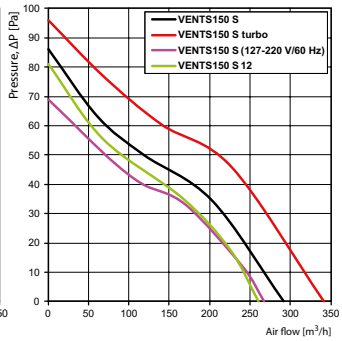

Technical data

Model	Frequency [Hz]	Voltage [V]	Power Consumption [W]	Current [A]	R.p.m.	Maximum air flow [m³/h]	Sound Pressure Level [dBA]*	Weight [kg]
VENTS 100 S	50	220-240	14	0.085	2300	95	34	0.58
VENTS 100 S (220 V/60 Hz)	60	220						
VENTS 100 S turbo	50	220-240	16	0.1	2300	124	37	0.66
VENTS 100 S turbo (220 V/60 Hz)	60	220						
VENTS 100 S (127-220 V/60 Hz)	60	127	10	0.115	2500	90	34	0.59
		220	9	0.054				
VENTS 100 S 12	50	12	14	1.5	2200	86	33	0.60
VENTS 120 S	50	220-240	17	0.1	2400	174	36	0.74
VENTS 120 S (220 V/60 Hz)	60	220						
VENTS 120 S turbo	50	220-240	24	0.105	2400	220	37	0.81
VENTS 120 S turbo (220 V/60 Hz)	60	220						
VENTS 125 S	50	220-240	16	0.1	2400	180	35	0.75
VENTS 125 S (220 V/60 Hz)	60	220						
VENTS 125 S turbo	50	220-240	24	0.105	2400	226	37	0.78
VENTS 125 S turbo (220 V/60 Hz)	60	220						
VENTS 125 S (127-220 V/60 Hz)	60	127	16	0.119	2400	185	36	0.76
		220	15	0.102				
VENTS 125 S 12	50	12	16	1.7	2300	165	34	0.78
VENTS 150 S	50	220-240	24	0.13	2400	292	38	1.13
VENTS 150 S (220 V/60 Hz)	60	220						
VENTS 150 S (127-220 V/60 Hz)	60	127	25	0.388	2350	267	38	1.13
		220	25	0.175				
VENTS 150 S 12	50	12	24	2	2300	260	37	1.13

*Sound pressure level measured in free space at a distance of 3 meters from the fan.

Mounting example



Overall dimensions

Model	Dimensions [mm]				
	Ø D	B	H	L	L1
VENTS 100 S	100	150	120	108	12
VENTS 100 S1	100	150	120	93	12
VENTS 120 S	120	177	140	108	13
VENTS 125 S	125	176	140	114	13
VENTS 125 S1	125	176	140	96	13
VENTS 150 S	150	205	165	132	14

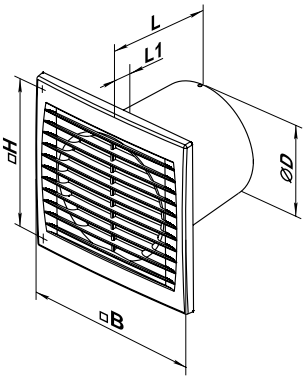

Certificates

IP34

The fans meet the applicable safety and electromagnetic compatibility standards.

VENTS D
Series



Axial fans
for exhaust ventilation
with air capacity
up to 341 m³/h

Application

- Continuous or periodic exhaust ventilation of bathroom, showers, kitchens and other utility spaces.
- Ventilation shaft mounting or duct connection.
- Low to medium air flow motion for short distances at low air resistance.
- Compatible with Ø 100, 120, 125 and 150 mm air ducts.



Design

- Ultra slim front panel – only 6.5 mm.
- Modern design and aesthetic look.
- The casing and the impeller are made of high-quality durable ABS plastic, UV resistant.
- The intellectual impeller design makes the fan efficiency high and the service life long.
- Insect screen.
- Protection rating IP34.

Motor

- Reliable and low-watt electric motor.
- Designed for continuous operation and requires no maintenance.
- Equipped with overheating protection.

Modifications and Options

D1 – shortened spigot model.

D K – fan is equipped with a backdraft damper for back flow preventing.

D L – the motor is equipped with ball bearings for long service life (appr. 40 thousand hours) and fan mounting at any angle. The bearings are maintenance-free and contain enough grease for the entire operating period.

D turbo – high-powered motor.

D 12 – modification with low-voltage motor. 12 V AC power supply.

DT – equipped with a regulated timer with the operating time from 2 to 30 minutes.

DTH – equipped with a timer with the operating time from 2 to 30 minutes and a humidity sensor with the threshold value from 60 to 90 %.

DV – equipped with a pull cord switch.

DVT – equipped with a pull cord switch and a regulated timer with the operating time adjustable from 2 to 30 minutes.

DVTH – equipped with a pull cord switch, regulated timer with the operating time adjustable from 2 to 30 minutes and a humidity sensor with the operating threshold range from 60 to 90 %.

Control

Manual:

- The fan is controlled by a room light switch. It is not included in the delivery set.
- The fan is controlled by the built-in **V** pull cord switch. Not applied in case of ceiling mounting.
- Speed control is possible through a thyristor speed controller (see Electrical Accessories). Several fans may be connected to the same controller. Speed controllers can not be connected to the fans with the T, TH, TP, VT, VTH modifications.

Automatic:

- By the **BU-1-60** electronic control unit (see Electrical Accessories). The control unit is supplied separately.
- By the **T** timer (the built-in turn-off delay timer enables the fan operation within 2 to 30 minutes after the fan switching off).
- By the humidity sensor and the **TH** timer (if the humidity level in the room exceeds the sensor threshold adjustable value within 60-90 %, the fan switches automatically on and operates until the humidity level drops to the standard level, after that the fan continues operating within the time period according to the timer setting, then shuts down).

Mounting features

- The fan is mounted directly into the ventilation shaft.
- In case of remote location of the ventilation shaft flexible air ducts may be used. The air duct is connected to the fan exhaust flange through a clamp.
- Fixed to the wall by means of screws.
- Suitable for ceiling mounting.
- To connect a fan with a 12 V low voltage motor to 220 V/50 Hz power mains, it is necessary to purchase a step-down transformer (e.g. the TRF 220/12-25 transformer).

Accessories



Aerodynamic characteristics

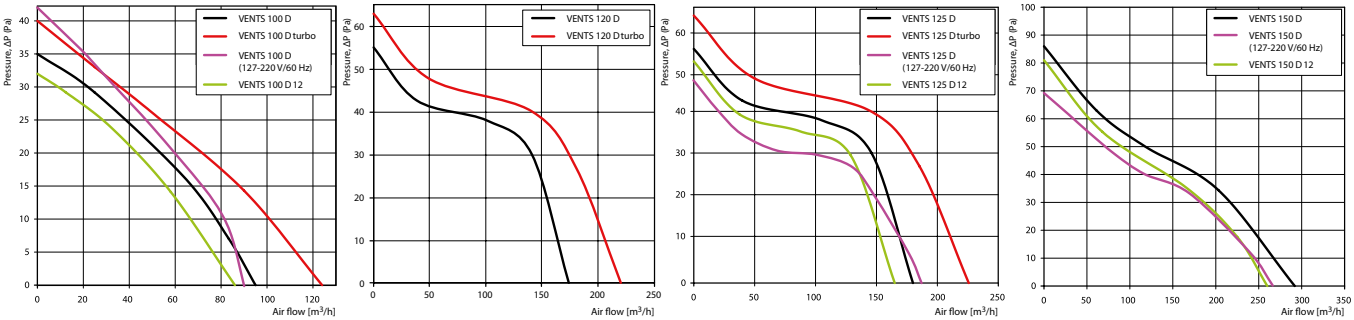

Technical data

Model	Frequency [Hz]	Voltage [V]	Power Consumption [W]	Current [A]	R.p.m.	Maximum air flow [m³/h]	Sound Pressure Level [dBA]*	Weight [kg]
VENTS 100 D	50	220-240	14	0.085	2300	95	34	0.58
VENTS 100 D (220 V/60 Hz)	60	220						
VENTS 100 D turbo	50	220-240	16	0.1	2300	124	37	0.66
VENTS 100 D turbo (220 V/60 Hz)	60	220						
VENTS 100 D (127-220 V/60 Hz)	60	127	10	0.115	2500	90	34	0.59
		220	9	0.054				
VENTS 100 D 12	50	12	14	1.5	2200	86	33	0.60
VENTS 120 D	50	220-240	17	0.1	2400	174	36	0.74
VENTS 120 D (220 V/60 Hz)	60	220						
VENTS 120 D turbo	50	220-240	24	0.105	2400	220	37	0.81
VENTS 120 D turbo (220 V/60 Hz)	60	220						
VENTS 125 D	50	220-240	16	0.1	2400	180	35	0.74
VENTS 125 D (220 V/60 Hz)	60	220						
VENTS 125 D turbo	50	220-240	24	0.105	2400	226	37	0.81
VENTS 125 D turbo (220 V/60 Hz)	60	220						
VENTS 125 D (127-220 V/60 Hz)	60	127	16	0.119	2400	185	36	0.75
		220	15	0.102				
VENTS 125 D 12	50	12	16	1.7	2300	165	34	0.69
VENTS 150 D	50	220-240	24	0.13	2400	292	38	0.92
VENTS 150 D (220 V/60 Hz)	60	220						
VENTS 150 D (127-220 V/60 Hz)	60	127	25	0.338	2350	267	38	0.93
		220	25	0.175				
VENTS 150 D 12	50	12	29	2	2300	260	37	0.88

*Sound pressure level measured in free space at a distance of 3 meters from the fan.

Mounting example



Overall dimensions

Model	Dimensions [mm]		
	Ø D	B	L
VENTS 100 D	100	150	109
VENTS 100 D1	100	150	95
VENTS 120 D	117	176	107
VENTS 125 D	125	176	113
VENTS 125 D1	125	176	96
VENTS 150 D	150	205	132

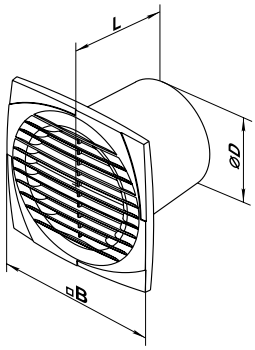

Certificates

IP34

The fans meet the applicable safety and electromagnetic compatibility standards.

VENTS LP
Series



Axial decorative fans with a short air duct 50 mm long for exhaust ventilation with air flow up to 94 m³/h

Application

- Continuous or periodic exhaust ventilation of bathrooms, showers, kitchens, and other utility spaces.
- Ventilation shaft mounting or duct connection.
- Low to medium air flow motion for short distances at low air resistance.
- Compatible with Ø 100 mm air ducts.

Design

- Modern design and aesthetic look.
- The front panel is made of high-quality durable ABS plastic, UV resistant. The casing and the impeller are made of polypropylene.
- The intellectual impeller design makes the fan efficiency high and the service life long.
- Protection rating IP24.

Motor

- Reliable and low-watt electric motor.
- Designed for continuous operation and requires no maintenance.
- Equipped with overheating protection.

Modifications and options

LP K – the fan is equipped with a backdraft damper for back flow preventing.

LP L – the motor is equipped with ball bearings for long service life (appr. 40 thousand hours) and fan mounting at any angle. The bearings are maintenance-free and contain enough grease for the entire operating period.

LP T – equipped with a regulated timer with the operating time from 2 to 30 minutes.

LP TH – equipped with a timer with the operating time from 2 to 30 minutes and a humidity sensor with the threshold range from 60 to 90 %.

LP V – equipped with a pull cord switch.

LP VT – equipped with a pull cord switch and a regulated timer with the operating time adjustable from 2 to 30 minutes.

LP VTH – equipped with a pull cord switch, regulated timer with the operating time adjustable from 2 to 30 minutes and a humidity sensor with the operating threshold range from 60 to 90 %.

Control

Manual:

- The fan is controlled by a room light switch. It is not included in the delivery set.
- The fan is controlled by a built-in pull cord switch **V**. Not applied in case of ceiling mounting.
- Speed control is possible through a thyristor speed controller (see Electrical Accessories). Several fans may be connected to the same controller. Speed controllers can not be connected to the fans with T, TH, TP, VT, VTH modifications.

Automatic:

- By a **BU-1-60** electronic control unit (see Electrical Accessories). The control unit is supplied separately.
- By a **T** timer (the built-in turn-off delay timer enables the fan operation within 2 to 30 minutes after the fan switching off).
- By a humidity sensor and a **TH** timer (if the humidity level in the room exceeds the sensor threshold value adjustable within 60-90 %, the fan switches automatically on and operates until the humidity level drops to the standard level, after that the fan continues operating within the time period according to the timer setting, then it shuts down).

Mounting features

- The fan is mounted directly into the ventilation shaft.
- In case of remote location of the ventilation shaft, flexible air ducts may be used. The air duct is connected to the fan exhaust flange through a clamp.
- Fixed to the wall by means of screws.
- Can be ceiling mounted in case the fan is ordered with ball bearings (L modification).

Accessories

Air ducts | Grilles and hoods | Backdraft damper | Speed controllers | Clamps



Aerodynamic characteristics

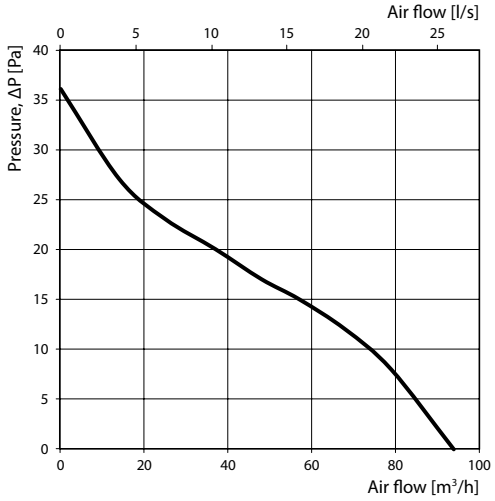

Technical data

Model	Frequency [Hz]	Voltage [V]	Power consumption [W]	Current [A]	RPM	Maximum air flow [m³/h]	Sound pressure level at 3 m [dBA]	Weight [kg]
VENTS 100 LP	50	220-240	14	0.097	2400	94	36	0.55
VENTS 100 LP (220 V/60 Hz)	60	220						

Mounting example



Overall dimensions

Model	Dimensions [mm]			
	Ø D	B	L	L1
VENTS LP 100	100	154	50	22

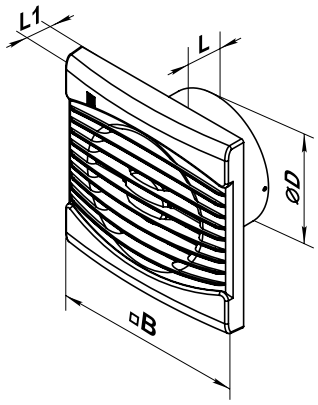

Certificates

IP24

The fans meet the applicable safety and electromagnetic compatibility standards.

AXIAL DECORATIVE FANS







Axial decorative fans
VENTS LD, VENTS LD Auto, VENTS LD light Series

Air flow up to 310 m³/h

page 132



Axial decorative fans
VENTS X Series, VENTS X Star Series

Air flow up to 116 m³/h

page 138



Axial decorative fans
VENTS Lumis Series

Air flow up to 115 m³/h

page 142



Axial decorative fans
VENTS RO black

Air flow up to 217 m³/h

page 144

VENTS LD
Series



Axial decorative fans
for exhaust ventilation with air
capacity up to 310 m³/h

Application

- Continuous or periodic exhaust ventilation of bathroom, showers, kitchens and other utility spaces.
- Ventilation shaft mounting or duct connection.
- Low to medium air flow motion for short distances at low air resistance.
- Compatible with Ø 100, 120, 125 and 150 mm air ducts.



LDA



LDA chrome



LD alumat

Design

- Modern design and aesthetic look.
- The casing and the impeller are made of high-quality durable ABS plastic, UV resistant.
- Various decorative plates for the front panel of the natural aluminum.
- The intellectual impeller design makes the fan efficiency high and the service life long.
- Protection rating IP34.

Motor

- Reliable and low-watt electric motor.
- Designed for continuous operation and requires no maintenance.
- Equipped with overheating protection.

Modifications and Options

LDA – the fan with a ground alumunium front panel.

LDA chrome – the fan with a mirror finish aluminium front panel.

LD alumat – the fan with a front panel painted silver (matt).

LD1 – shortened branch pipe model.

LD K – fan is equipped with a backdraft damper for back flow preventing.

LD L – the motor is equipped with ball bearings for long service life (appr. 40 thousand hours) and fan mounting at any angle. The bearings are maintenance-free and contain enough grease for the entire operating period.

LD turbo – high-powered motor.

LD 12 – modification with low-voltage motor. 12 V AC power supply.

LDT – equipped with a regulated timer with the operating time from 2 to 30 minutes.

LDTH – equipped with a timer with the operating time from 2 to 30 minutes and a humidity sensor with the threshold value from 60 to 90 %.

LDV – equipped with a pull cord switch.

LDVT – equipped with a pull cord switch and a regulated timer with the operating time adjustable from 2 to 30 minutes.

LDVTH – equipped with a pull cord switch, regulated timer with the operating time adjustable from 2 to 30 minutes and a humidity sensor with the operating threshold range from 60 to 90 %.

Control

Manual:

- The fan is controlled by a room light switch. It is not included in the delivery set.
- The fan is controlled by the built-in pull cord switch **V**. Not applied in case of ceiling mounting.
- Speed control is possible through a thyristor speed controller (see Electrical Accessories). Several fans may be connected to the same controller. Speed controllers can not be connected to the fans with T, TH, TP, VT, VTH modifications.

Automatic:

- By the **BU-1-60** electronic control unit (see Electrical Accessories). The control unit is supplied separately.
- By the **T** timer (the built-in turn-off delay timer enables the fan operation within 2 to 30 minutes after the fan switching off).
- By the humidity sensor and the **TH** timer (if the humidity level in the room exceeds the sensor threshold adjustable value within 60-90 % the fan switches automatically on and operates until the humidity level drops to the standard level, after that the fan continues operating within the time period according to the timer setting, then shuts down).

Mounting features

- The fan is mounted directly into the ventilation shaft.
- In case of remote location of the ventilation shaft flexible air ducts may be used. The air duct is connected to the fan exhaust flange through a clamp.
- Fixed to the wall by means of screws.
- Suitable for ceiling mounting.
- To connect a fan with a 12 V low voltage motor to 220 V/50 Hz power mains, it is necessary to purchase a step-down transformer (e.g. the TRF 220/12-25 transformer).

Accessories

Air ducts | Grilles and hoods | Backdraft damper | Speed controllers | Clamps



Aerodynamic characteristics

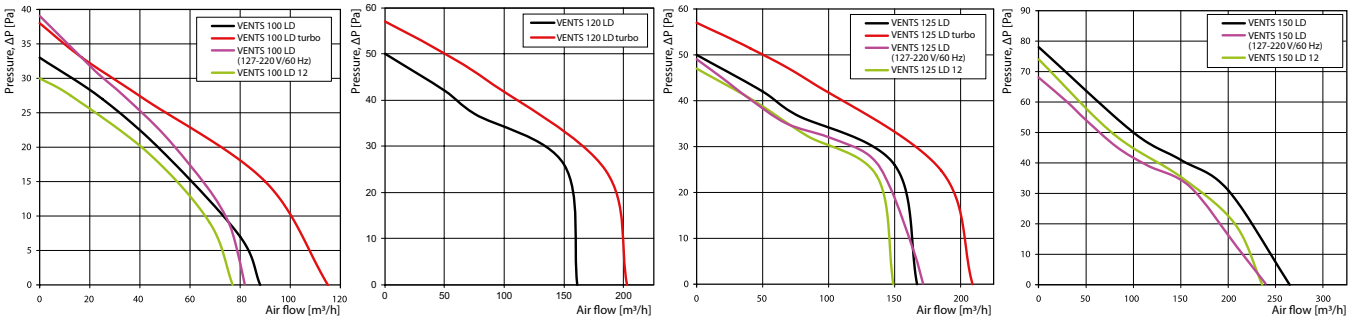

Technical data

Model	Frequency [Hz]	Voltage [V]	Power Consumption [W]	Current [A]	R.p.m.	Maximum air flow [m³/h]	Sound Pressure Level [dBA]*	Weight [kg]
VENTS 100 LD	50	220-240	14	0.085	2300	88	33	0.60
VENTS 100 LD (220 V/60 Hz)	60	220						
VENTS 100 LD turbo	50	220-240	16	0.1	2300	115	36	0.68
VENTS 100 LD turbo (220 V/60 Hz)	60	220						
VENTS 100 LD (127-220 V/60 Hz)	60	127	10	0.115	2500	82	33	0.60
		220	9	0.054				
VENTS 100 LD 12	50	12	14	1.5	2200	77	32	0.59
VENTS 120 LD	50	220-240	16	0.1	2400	161	34	0.74
VENTS 120 LD (220 V/60 Hz)	60	220						
VENTS 120 LD turbo	50	220-240	24	0.105	2400	203	36	0.84
VENTS 120 LD turbo (220 V/60 Hz)	60	220						
VENTS 125 LD	50	220-240	16	0.1	2400	167	34	0.74
VENTS 125 LD (220 V/60 Hz)	60	220						
VENTS 125 LD turbo	50	220-240	24	0.105	2400	209	36	0.84
VENTS 125 LD turbo (220 V/60 Hz)	60	220						
VENTS 125 LD (127-220 V/60 Hz)	60	127	16	0.119	2400	172	35	0.74
		220	15	0.102				
VENTS 125 LD 12	50	12	16	1.7	2300	149	33	0.72
VENTS 150 LD	50	220-240	24	0.13	2400	265	37	0.96
VENTS 150 LD (220 V/60 Hz)	60	220						
VENTS 150 LD (127-220 V/60 Hz)	60	127	25	0.338	2350	240	37	0.96
		220	25	0.175				
VENTS 150 LD 12	50	12	29	2	2300	236	36	0.92

*Sound pressure level measured in free space at a distance of 3 meters from the fan.

Mounting example



Overall dimensions

Model	Dimensions [mm]				
	Ø D	B	H	L	L1
VENTS 100 LD	100	152	120	126	30
VENTS 100 LD1	100	152	120	111	30
VENTS 120 LD	120	177	140	129	34
VENTS 125 LD	125	177	140	135	34
VENTS 125 LD1	125	177	140	116	34
VENTS 150 LD	150	206	165	154	36

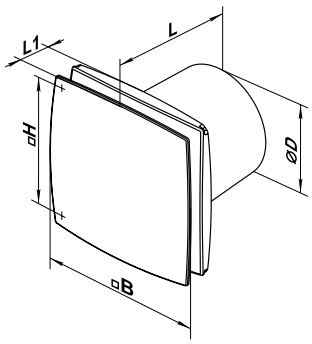

Certificates

IP34

The fans meet the applicable safety and electromagnetic compatibility standards.

VENTS LD Auto Series



Exhaust axial decorative fans with automatic louvre shutters with air flow up to 128 m³/h

Application

- Continuous or periodic exhaust ventilation of bathroom, showers, kitchens and other utility spaces.
- Ventilation shaft mounting or duct connection.
- Low to medium air flow motion for short distances at low air resistance.
- Compatible with Ø 100 mm air ducts.



Fan off – louver shutters CLOSED



Fan on – louver shutters OPEN

Design

- Modern design and aesthetic look.
- The casing, impeller and front panel are made of high-quality and durable UV-resistant ABS plastic.
- Various decorative natural aluminium plates.
- The thermal actuator provides smooth opening and closing of the automatic louvre shutters that prevent air back drafting.
- The impeller design enhances the fan efficiency and prolongs the motor service life.
- Protection rating IP24.

Motor

- Reliable motor with low energy demand
- Designed for continuous operation and requires no maintenance.
- Equipped with overheating protection.

Modifications and options

LD Auto L – the motor is equipped with ball bearings for long service life (appr. 40 thousand hours) and fan mounting at any angle. The bearings are maintenance-free and contain enough grease for the entire operating period.

LD Auto turbo – high-powered motor.

LD Auto press – 5-blade low-noise impeller with improved aerodynamics for higher fan capacity.

LD Auto 12 – equipped with a reliable low-voltage motor, 12 V.

LD Auto T – equipped with a turn-off delay timer adjustable from 2 to 30 minutes.

LD Auto TH – equipped with a turn-off delay timer adjustable from 2 to 30 minutes and a humidity sensor adjustable from 60 to 90 %.

LD Auto V – equipped with a pull cord switch.

LD Auto VT – equipped with a pull cord switch and a turn-off delay timer adjustable from 2 to 30 minutes.

LD Auto VTH – equipped with a pull cord switch, turn-off delay timer adjustable from 2 to 30 minutes and a humidity sensor adjustable from 60 to 90 %.

Control

Manual:

- The fan is controlled with a room light switch (not included into delivery set).
- The fan is controlled with a built-in pull cord switch **"V"**. This option is not applicable for ceiling mounting.

Automatic:

- Speed control with a an electronic control unit **BU–1–60**, refer Electric accessories. The control unit is available upon separate order.
- Fan control with a turn-off delay timer **"T"** that enables fan running from 2 to 30 minutes after turning the fan off.
- Fan control with a humidity sensor and turn-off delay timer **"TH"** that enables fan switching on and running until the indoor humidity drops below the set point adjustable from 60 to 90 % and subsequent fan running within the set time before turning off.

Mounting features

- The fan is mounted directly into the ventilation shaft.
- Flexible duct connection is recommended in case of the remote ventilation shaft location. The air duct is connected to the fan exhaust flange through a clamp.
- Fixing with screws.
- Suitable for ceiling mounting.
- The step-down transformer (TRF 220/12-25) enables connection of a low-voltage fan 12 V/50 Hz to 220 V/50 Hz power mains. Available upon separate order.

Accessories

Air ducts | Grilles and hoods | Back valves | Speed controllers | Control unit | Transformer | Clamps



Aerodynamic characteristics

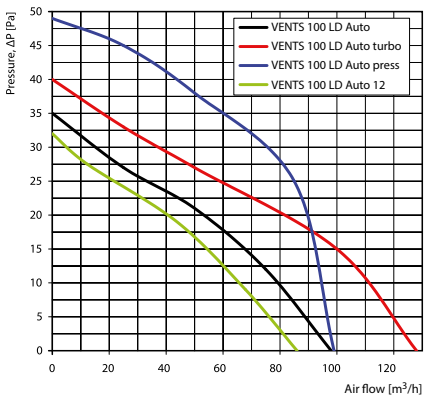

Technical data

Model	Frequency [Hz]	Voltage [V]	Power Consumption [W]	Current [A]	R.p.m.	Maximum air flow [m³/h]	Sound Pressure Level [dBA]*	Weight [kg]
VENTS 100 LD Auto	50	220-240	18	0.085	2300	98	34	0.73
VENTS 100 LD Auto (220 V/60 Hz)	60	220						
VENTS 100 LD Auto turbo	50	220-240	20	0.1	2300	128	37	0.79
VENTS 100 LD Auto turbo (220 V/60 Hz)	60	220						
VENTS 100 LD Auto press	50	220-240	20	0.1	2300	99	37	0.73
VENTS 100 LD Auto press (220 V/60 Hz)	60	220						
VENTS 100 LD Auto 12	50/60	12	18	1.5	2200	86	33	0.72

*Sound pressure level measured in free space at a distance of 3 meters from the fan.

Mounting example



Overall dimensions

Model	Dimensions [mm]			
	Ø D	B	L	L1
VENTS 100 LD Auto	99.5	205	110	60

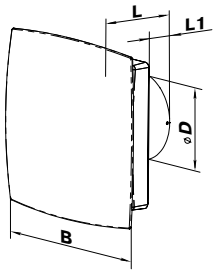

Certificates

IP24

The fans meet the applicable safety and electromagnetic compatibility standards.

VENTS LD light
Series



Exhaust axial decorative fans with air flow up to 115 m³/h

Application

- Continuous or periodic exhaust ventilation of bathroom, showers, kitchens and other utility spaces.
- Ventilation shaft mounting or duct connection.
- Low to medium air flow motion for short distances at low air resistance.
- Compatible with Ø 100 mm air duct.



LD Light blue



LD Light red

Design

- Modern design and original look.
- The casing and the impeller are made of high-quality durable ABS plastic, UV resistant.
- Front panel edge is made of transparent plexiglass with LED illumination of various colours (blue, red, green).
- The impeller design enhances the fan efficiency and prolongs the motor service life.
- Protection rating IP34.

Motor

- Reliable motor with low energy demand.
- Designed for continuous operation and requires no maintenance.
- Equipped with overheating protection.

Modifications and options

LD Light K – the fan is equipped with a back valve to prevent air backdrafting.

LD Light L – the motor is equipped with ball bearings for long service life (appr. 40 thousand hours) and fan mounting at any angle. The bearings are maintenance-free and contain enough grease for the entire operating period.

LD Light turbo – high-powered motor.

LD Light T – equipped with a turn-off delay timer adjustable from 2 to 30 minutes.

LD Light TH – equipped with a turn-off delay timer adjustable from 2 to 30 minutes and a humidity sensor adjustable from 60 to 90 %.

LD Light V – equipped with a pull cord switch.

LD Light VT – equipped with a pull cord switch and a turn-off delay timer adjustable from 2 to 30 minutes.

LD Light VTH – equipped with a pull cord switch, turn-off delay timer adjustable from 2 to 30 minutes and a humidity sensor adjustable from 60 to 90 %.

Control

Manual:

- The fan is controlled with a room light switch (not included into delivery set).
- The fan is controlled with a built-in pull cord switch **"V"**. This option is not applicable for ceiling mounting.
- Speed control is possible through a thyristor speed controller (see Electrical Accessories). Several fans may connected to the same controller. Speed controllers can not be connected to the fans with T, TH, TP, VT, VTH modification.

Automatic:

- Speed control with a an electronic control unit **BU–1–60**, refer the Electric accessories. The control unit is available upon separate order.
- Fan control with a turn-off delay timer **"T"** that enables fan running from 2 to 30 minutes after turning the fan off.
- Fan control with a humidity sensor and turn-off delay timer **"TH"** that enables fan switching on and running until the indoor humidity drops below the set point adjustable from 60 to 90 % and subsequent fan running within the set time before turning off.

Mounting features

- The fan is mounted directly into the ventilation shaft.
- Flexible duct connection is recommended in case of the remote ventilation shaft location. The air duct is connected to the fan exhaust flange through a clamp.
- Fixing to wall with screws.
- Suitable for ceiling mounting.

Accessories

Air ducts | Grilles and hoods | Back valves | Speed controllers | Control unit | Transformer | Clamps



Aerodynamic characteristics

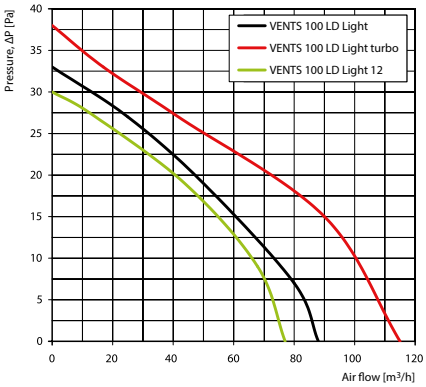

Technical data

Model	Frequency [Hz]	Voltage [V]	Power Consumption [W]	Current [A]	R.p.m.	Maximum air flow [m³/h]	Sound Pressure Level [dBA]*	Weight [kg]
VENTS 100 LD Light	50	220-240	14	0.085	2300	88	33	0.73
VENTS 100 LD Light (220 V/60 Hz)	60	220						
VENTS 100 LD Light turbo	50	220-240	16	0.1	2300	115	36	0.81
VENTS 100 LD Light turbo (220 V/60 Hz)	60	220						

*Sound pressure level measured in free space at a distance of 3 meters from the fan.

Mounting example



Overall dimensions

Model	Overall dimensions [mm]			
	Ø D	B	L	L1
VENTS 100 LD Light	100	160	126	96

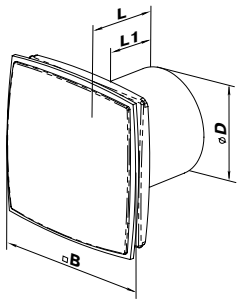

Certificates

IP34

The fans meet the applicable safety and electromagnetic compatibility standards.

VENTS X
Series



Axial decorative fans
for exhaust ventilation
with the capacity
up to 116 m³/h

Application

- Continuous or periodic exhaust ventilation of bathroom, showers, kitchens and other utility spaces.
- Ventilation shaft mounting or duct connection.
- Low to medium air flow motion for short distances at low air resistance.
- Compatible with Ø 100 mm air ducts.

Design

- Modern design and aesthetic look.
- The casing and the impeller are made of high-quality durable ABS plastic, UV resistant.
- The intellectual impeller design makes the fan efficiency high and the service life long.
- Decorative replaceable colour covers: light blue, bright green, yellow and pink.
- Protection rating IP24.

Motor

- Reliable and low-watt electric motor.
- Designed for continuous operation and requires no maintenance.
- Equipped with overheating protection.

Modifications and Options

X alumat – fan with a matt gray painted front plate.

X K – fan is equipped with a backdraft damper for back flow preventing.

X L – the motor is equipped with ball bearings for long service life (appr. 40 thousand hours) and fan mounting at any angle. The bearings are maintenance-free and contain enough grease for the entire operating period.

X turbo – high-powered motor.

X 12 – modification with low-voltage motor. 12 V AC power supply.

X T – equipped with a regulated timer with the operating time from 2 to 30 minutes.

XTH – equipped with a timer with the operating time from 2 to 30 minutes and a humidity sensor with the threshold value from 60 to 90 %.

XV – equipped with a pull cord switch.

XVT – equipped with a pull cord switch and a regulated timer with the operating time adjustable from 2 to 30 minutes.

XVTH – equipped with a pull cord switch, regulated timer with the operating time adjustable from 2 to 30 minutes and a humidity sensor with the operating threshold range from 60 to 90 %.

Control

Manual:

- The fan is controlled by a room light switch. It is not included in the delivery package.
- The fan is controlled by the built-in pull cord switch **V**. Not applied in case of ceiling mounting.
- Speed control is possible through a thyristor speed controller (see Electrical Accessories). Several fans may connected to the same controller. Speed controllers can not be connected to the fans with T, TH, TP, VT, VTH modification.

Automatic:

- By the electronic control unit **BU–1–60** (see Electrical Accessories). The control unit is supplied separately.
- By the timer **T** (the built-in turn-off delay timer enables the fan operation within 2 to 30 minutes after the fan switching off).
- By the humidity sensor and timer **TH** (if the humidity level in the room exceeds the sensor threshold adjustable value within 60-90 % the fan switches automatically on and operates until the humidity level drops to the standard level, after that the fan continues operating within the time period according to the timer setting, then shuts down).

Mounting features

- The fan is mounted directly into the ventilation shaft.
- Flexible duct application is recommended in case of remote location of the ventilation shaft. The air duct is connected to the fan exhaust flange through a clamp.
- Fixed to wall by self-tapping screws.
- Suitable for ceiling mounting.
- For 12 V low-voltage motor fan connection to 220 V/50 Hz power mains use the step-down transformer TRF 220/12-25 that is available upon separate order.

Accessories

Air ducts | Grilles and hoods | Backdraft damper | Speed controllers | Clamps



Aerodynamic characteristics

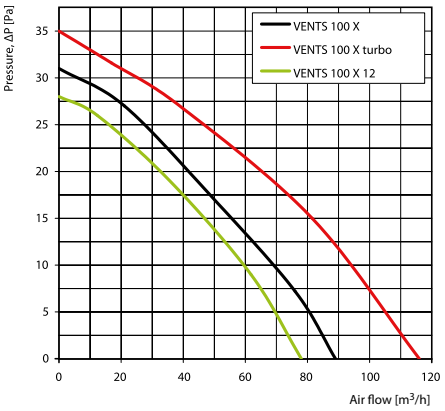

Technical data

Model	Frequency [Hz]	Voltage [V]	Power Consumption [W]	Current [A]	R.p.m.	Maximum air flow [m³/h]	Sound Pressure Level [dBA]*	Weight [kg]
VENTS 100 X	50	220-240	14	0.085	2300	89	33	0.61
VENTS 100 X (220 V/60 Hz)	60	220						
VENTS 100 X turbo	50	220-240	16	0.1	2300	116	36	0.69
VENTS 100 X turbo (220 V/60 Hz)	60	220						
VENTS 100 X 12	50/60	12	14	1.5	2200	78	32	0.60

*Sound pressure level measured in free space at a distance of 3 meters from the fan.

Mounting example



Overall dimensions

Model	Dimensions [mm]				
	Ø D	B	H	L	L1
VENTS 100 X	100	152	120	125	30

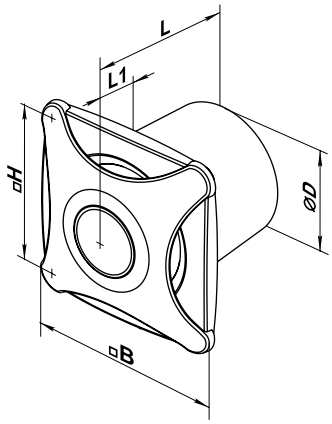

Certificates

IP24

The fans meet the applicable safety and electromagnetic compatibility standards.

VENTS X star
Series



Axial decorative fans
for exhaust ventilation
with the capacity
up to 116 m³/h

Application

- Continuous or periodic exhaust ventilation of bathroom, showers, kitchens and other utility spaces.
- Ventilation shaft mounting or duct connection.
- Low to medium air flow motion for short distances at low air resistance.
- Compatible with Ø 100 mm air ducts.

Design

- Modern design and aesthetic look.
- The casing and the impeller are made of high-quality durable ABS plastic, UV resistant.
- The intellectual impeller design makes the fan efficiency high and the service life long.
- A 2 W LED lamp is integrated into the fan casing.
- Protection rating IP24.

Motor

- Reliable and low-watt electric motor.
- Designed for continuous operation and requires no maintenance.
- Equipped with overheating protection.

Modifications and Options

X star alumat – fan with a matt gray painted front plate.

X star K – fan is equipped with a backdraft damper for back flow preventing.

X star L – the motor is equipped with ball bearings for long service life (appr. 40 thousand hours) and fan mounting at any angle. The bearings are maintenance-free and contain enough grease for the entire operating period.

X star turbo – high-powered motor.

X star 12 – modification with low-voltage motor. 12 V AC power supply.

Control

Manual:

- The fan is controlled by a room light switch. It is not included in the delivery package.
- Speed control is possible through a thyristor speed controller (see Electrical Accessories). Several fans may connected to the same controller. Speed controllers can not be connected to the fans with T, TH, TP, VT, VTH modification.

Automatic:

- By the electronic control unit **BU–1–60** (see Electrical Accessories). The control unit is supplied separately.

Mounting features

- The fan is mounted directly into the ventilation shaft.
- Flexible duct application is recommended in case of remote location of the ventilation shaft. The air duct is connected to the fan exhaust flange through a clamp.
- Fixed to wall by self-tapping screws.
- Suitable for ceiling mounting.
- Both parallel or separate switching of the fan and the built-in lamp (refer wiring diagrams).
- For 12 V low-voltage motor fan connection to 220 V/50 Hz power mains use the step-down transformer TRF 220/12-25 that is available upon separate order.



Vents X star alumat



LED lamp, 2 W

Accessories

Air ducts | Grilles and hoods | Backdraft damper | Speed controllers | Clamps



Aerodynamic characteristics

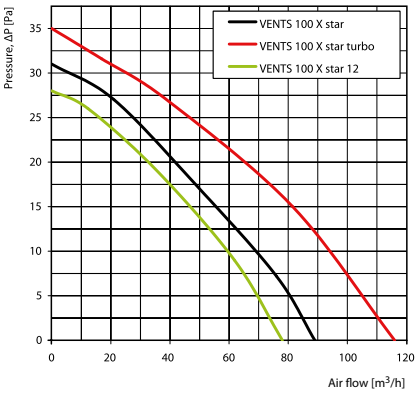

Technical data

Model	Frequency [Hz]	Voltage [V]	Power Consumption [W]	Current [A]	R.p.m.	Maximum air flow [m³/h]	Sound Pressure Level [dBA]*	Weight [kg]
VENTS 100 X star	50	220-240	16	0.085	2300	89	33	0.61
VENTS 100 X star (220 V/60 Hz)	60	220						
VENTS 100 X star turbo	50	220-240	16	0.1	2300	116	36	0.69
VENTS 100 X star turbo (220 V/60 Hz)	60	220						
VENTS 100 X star 12	50/60	12	14	1.5	2200	78	32	0.60

*Sound pressure level measured in free space at a distance of 3 meters from the fan.

Mounting example



Overall dimensions

Model	Dimensions [mm]				
	Ø D	B	H	L	L1
VENTS 100 X star	100	152	120	131	36

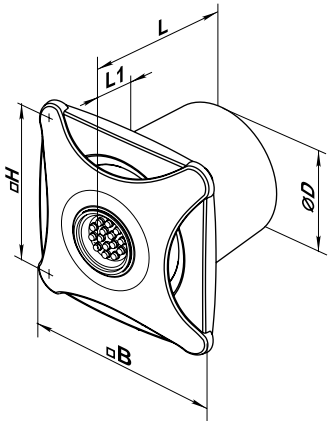

Certificates

IP24

The fans meet the applicable safety and electromagnetic compatibility standards.

VENTS Lumis
Series



Exhaust axial fan
with integrated light source.
Air flow
up to 115 m³/h

Application

- Continuous or periodic exhaust ventilation of bathroom, showers, kitchens and other utility spaces.
- Ventilation shaft mounting or duct connection.
- Low to medium air flow motion for short distances at low air resistance.
- Compatible with Ø 100 mm air ducts.

Design

- Modern design and aesthetic look.
- The casing and the impeller are made of high-quality durable ABS plastic, UV resistant.
- The impeller design enhances the fan efficiency and prolongs the motor service life.
- The 10 watt LED backlight lamp is integrated in the casing with a working life of 40 000 hours.
- The lamp colour temperature is 3000 K (warm light).
- Protection rating IP24.

Motor

- Reliable motor with low energy demand.
- Designed for continuous operation and requires no maintenance.
- Equipped with overheating protection.

Modifications and options

Lumis 100 K – the fan is equipped with a back valve to prevent air back drafting.

Lumis 100 L – the motor is equipped with ball bearings for long service life (appr. 40 thousand hours) and fan mounting at any angle. The bearings are maintenance-free and contain enough grease for the entire operating period.

Lumis 100 turbo – high-powered motor.

Control

Manual:

- The fan is controlled with a room light switch (not included in the delivery).
- Speed control with a thyristor speed controller, refer to the Electric accessories. Several fans may be connected to one controller.

Automatic:

- Speed control with a an electronic control unit BU-1-60, refer to the Electric accessories. The control unit is available upon separate order.

Mounting features

- The fan is mounted directly into the ventilation shaft.
- Flexible duct connection is recommended in case of the remote ventilation shaft location. The air duct is connected to the fan exhaust flange through a clamp.
- Fixing to wall with screws.
- Suitable for ceiling mounting.

Accessories

Air ducts



Grilles and hoods



Back valves



Speed controllers



Control unit



Clamps



Aerodynamic characteristics

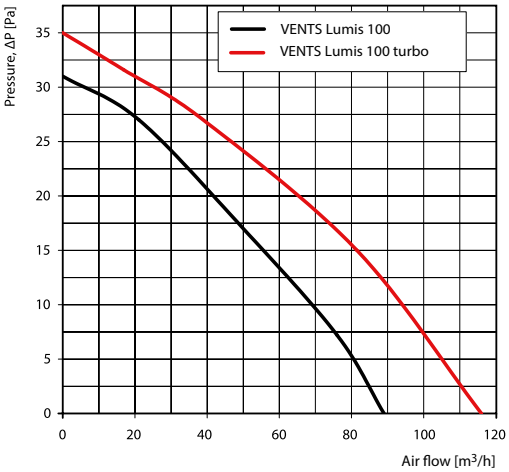

Technical data

Model	Frequency [Hz]	Voltage [V]	Power Consumption [W]	Current [A]	R.p.m.	Maximum air flow [m³/h]	Sound Pressure Level [dBA]*	Weight [kg]
VENTS Lumis 100	50	220-240	24	0.135	2410	92	33	0.79
VENTS Lumis 100 (220 V/60 Hz)	60	220						
VENTS Lumis 100 turbo	50	220-240	26	0.15	2400	115	37	0.87
VENTS Lumis 100 turbo (220 V/60 Hz)	60	220						

*Sound pressure level measured in free space at a distance of 3 meters from the fan.

Mounting example



Overall dimensions

Model	Dimensions [mm]			
	Ø D1	Ø D	L	L1
VENTS Lumis 100	178	99.4	133.5	46
VENTS Lumis 100 turbo	178	99.4	133.5	46

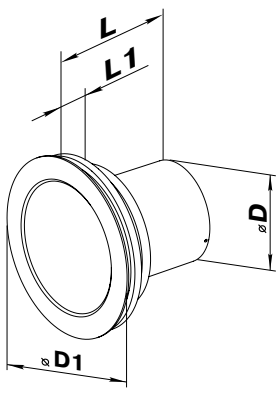

Certificates

IP24

The fans meet the applicable safety and electromagnetic compatibility standards.

VENTS RO black
Series



Axial decorative fans
for exhaust ventilation with air flow
up to 217 m³/h

Application

- Continuous or periodic exhaust ventilation of bathrooms, showers, kitchens and other utility spaces.
- Ventilation shaft mounting or duct connection.
- Low to medium air flow motion for short distances at low air resistance.
- Compatible with Ø 100, 125 and 150 mm air ducts.

Design

- Modern design and aesthetic look.
- The casing and the impeller are made of high-quality durable ABS plastic, UV resistant.
- The intellectual impeller design makes the fan efficiency high and the service life long.
- Protection rating IP24.

Motor

- Reliable and low-watt electric motor.
- Designed for continuous operation and requires no maintenance.
- Equipped with overheating protection.

Modifications and options

RO K – fan is equipped with a backdraft damper for back flow preventing.

RO L – the motor is equipped with ball bearings for long service life (appr. 40 thousand hours) and fan mounting at any angle. The bearings are maintenance-free and contain enough grease for the entire operating period.

RO turbo – high-powered motor.

RO 12 – modification with low-voltage motor. 12 V AC power supply.

RO T – equipped with a regulated timer with the operating time from 2 to 30 minutes.

RO TH – equipped with a timer with the operating time from 2 to 30 minutes and a humidity sensor with the threshold range from 60 to 90 %.

RO V – equipped with a pull cord switch.

RO VT – equipped with a pull cord switch and a regulated timer with the operating time adjustable from 2 to 30 minutes.

RO VTH – equipped with a pull cord switch, regulated timer with the operating time adjustable from 2 to 30 minutes and a humidity sensor with the operating threshold range from 60 to 90 %.

Control

Manual:

- The fan is controlled by a room light switch. It is not included in the delivery set.
- The fan is controlled by the built-in pull cord switch **V**. Not applied in case of ceiling mounting.
- Speed control is possible through a thyristor speed controller (see Electrical Accessories). Several fans may be connected to the same controller. Speed controllers can not be connected to the fans with T, TH, TP, VT, VTH modifications.

Automatic:

- By the **BU-1-60** electronic control unit (see Electrical Accessories). The control unit is supplied separately.
- By the **T** timer (the built-in turn-off delay timer enables the fan operation within 2 to 30 minutes after the fan switching off).
- By the humidity sensor and the **TH** timer (if the humidity level in the room exceeds the sensor threshold value adjustable within 60-90 %, the fan switches automatically on and operates until the humidity level drops to the standard level, after that the fan continues operating within the time period according to the timer setting, then it shuts down).

Mounting features

- The fan is mounted directly into the ventilation shaft.
- In case of remote location of the ventilation shaft, flexible air ducts may be used. The air duct is connected to the fan exhaust flange through a clamp.
- Fixed to the wall by means of screws.
- Suitable for ceiling mounting.
- To connect a fan with a 12 V low voltage motor to 220 V/50 Hz power mains, it is necessary to purchase a step-down transformer (e.g. the TRF 220/12-25 transformer).

Accessories

Air ducts | Grilles and hoods | Backdraft damper | Speed controllers | Clamps



Aerodynamic characteristics

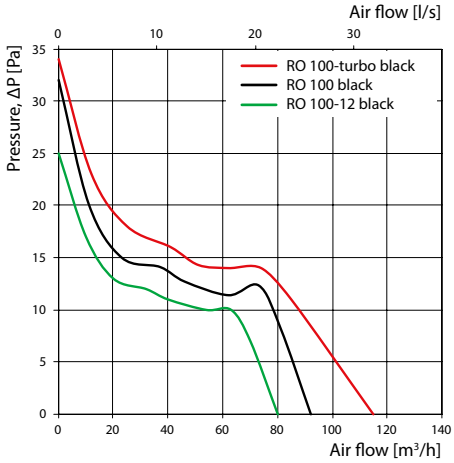

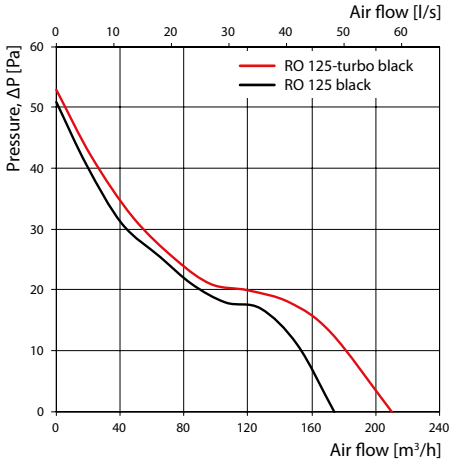

Technical data

Model	Frequency [Hz]	Voltage [V]	Power consumption [W]	Current [A]	R.p.m.	Maximum air flow [m³/h]	Sound pressure level at 3 m [dBA]	Weight [kg]
VENTS RO 100 black	50/60	220-240	14	0.090	2300	92	33	0.60
VENTS RO 100-turbo black	50/60	220-240	17	0.121	2500	115	37	0.68
VENTS RO 100 12 black	50	12	14	1.650	2100	80	32	0.59
VENTS RO 125 black	50/60	220-240	17.5	0.117	2400	174	35	0.74
VENTS RO 125-turbo black	50/60	220-240	21	0.132	2500	217	37	0.84

Mounting example



Overall dimensions

Model	Dimensions [mm]			
	Ø D	Ø D1	L	L1
VENTS RO 100 black	100	172	121	88
VENTS RO 125 black	125	172	122	88

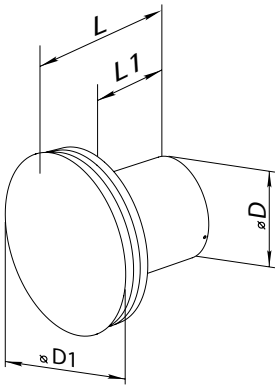

Certificates

IP24

The fans meet the applicable safety and electromagnetic compatibility standards.

AXIAL WINDOW FANS

VENTS MAO1



Axial window fan with automatic louver shutters for exhaust ventilation with the capacity up to 295 m^3/h.

VENTS VV Series



Axial window fan with automatic louver shutters for exhaust ventilation with the capacity up to 455 m^3/h. Flange mounting sizes 180 mm and 230 mm.

VENTS VVR Series



Axial window fan with automatic louver shutters and reversing motor for exhaust or supply ventilation with the capacity up to 455 m^3/h. Flange mounting sizes 180 mm and 230 mm.







Axial window fans
VENTS MAO1 Series

Air flow up to 295 m³/h

page 148



Axial window fans
VENTS VV Series

Air flow up to 455 m³/h

page 150



Axial window fans
VENTS VVR Series

Air flow up to 455 m³/h

page 150

VENTS MAO1
Series



Axial window fans
for exhaust ventilation
with the capacity up to 295 m³/h

Application

- Continuous or periodic exhaust ventilation of bathroom, showers, kitchens and other utility spaces.
- For mounting in windows.

Design

- Modern design and aesthetic look.
- The casing and the impeller are made of high-quality durable ABS plastic, UV resistant.
- The intellectual impeller design makes the fan efficiency high and the service life long.
- The fan and motor are specially designed for silent operation.
- Fan is equipped with a thermal actuator that provides smooth opening and shutting of automatic louver shutters for air back flow preventing.
- Protection rating IP24.

Motor

- Reliable and low-watt electric motor.
- Designed for continuous operation and requires no maintenance.
- Equipped with overheating protection.

Modifications and Options

MAO1 L – the motor is equipped with ball bearings for long service life (appr. 40 thousand hours) and fan mounting at any angle. The bearings are maintenance-free and contain enough grease for the entire operating period.

MAO1 turbo – high-powered motor.

MAO1 12 – modification with low-voltage motor. 12 V AC power supply.

MAO1 T – equipped with a regulated timer with the operating time from 2 to 30 minutes.

MAO1 V – equipped with a pull cord switch.

MAO1 VT – equipped with a pull cord switch and a regulated timer with the operating time adjustable from 2 to 30 minutes.

Control

Manual:

- The fan is controlled by a room light switch. It is not included in the delivery package.
- The fan is controlled by the built-in pull cord switch **V**.

Automatic:

- By the electronic control unit **BU–1–60** (see Electrical Accessories). The control unit is supplied separately.
- By the timer T (the built-in turn-off delay timer enables the fan operation within 2 to 30 minutes after the fan switching off).

Mounting features

- The fan is mounted directly into the window opening.
- For 12 V low-voltage motor fan connection to 220 V/50 Hz power mains use the step-down transformer TRF 220/12-25 that is available upon separate order.



Fan OFF – louver shutters CLOSED



Fan ON – louver shutters OPEN

Accessories

Speed controllers



Aerodynamic characteristics

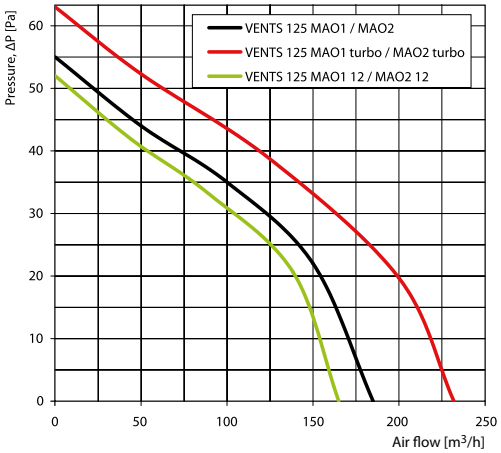

Technical data

Model	Frequency [Hz]	Voltage [V]	Power Consumption [W]	Current [A]	R.p.m.	Maximum air flow [m³/h]	Sound Pressure Level [dBA]*	SEC class	Weight [kg]
VENTS 125 MAO1	50	220-240	22	0.1	2400	185	35	E	1.15
VENTS 125 MAO1 (220 V/60 Hz)	60	220							
VENTS 125 MAO1 turbo	50	220-240	24	0.105	2400	232	37	E	1.31
VENTS 125 MAO1 turbo (220 V/60 Hz)	60	220							
VENTS 125 MAO1 12	50/60	12	16	1.7	2300	165	34	E	1.13
VENTS 150 MAO1	50	220-240	26	0.13	2400	295	41	E	1.53
VENTS 150 MAO1 (220 V/60 Hz)	60	220							
VENTS 150 MAO1 12	50	12	29	2	2300	263	40	E	1.49

*Sound pressure level measured in free space at a distance of 3 meters from the fan.

Overall dimensions

Model	Dimensions [mm]					
	Ø D	B	H	H1	L1	L2
VENTS 125 MAO1	125	190	173	–	58	53
VENTS 150 MAO1	150	212	195	–	66	60

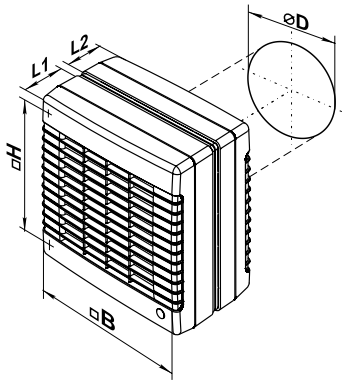

Mounting examples

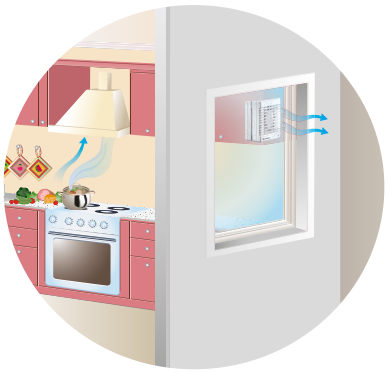

Certificates

IP24

The fans meet the applicable safety and electromagnetic compatibility standards.

VENTS VV Series



Axial window fan with automatic louver shutters for exhaust ventilation with the capacity up to 455 m³/h

VENTS VVR Series



Axial window fan with automatic louver shutters and reversing motor for exhaust and supply ventilation with the capacity up to 455 m³/h

Application

- Continuous or periodic exhaust ventilation of bathroom, showers, kitchens and other utility spaces.
- For mounting in windows.

Design

- Modern design and aesthetic look.
- The casing and the impeller are made of high-quality durable ABS plastic, UV resistant.
- The intellectual impeller design makes the fan efficiency high and the service life long.
- The fan and motor are specially designed for silent operation.
- Equipped with automatic louver shutter for air back flow prevention.
- Protection rating IPX4.

Motor

- Reliable and low-watt electric motor.
- Designed for continuous operation and requires no maintenance.
- Equipped with overheating protection.
- **VVR** series fans are equipped with a reversing motor for combination of air exhaust and air supply functions.

Control

Manual:

- The fan is controlled by a room light switch. It is not included in the delivery package.
- Speed control is possible through a thyristor speed controller (see Electrical Accessories). Several fans may connected to the same controller. Speed controllers can not be connected to the fans with T, TH, TP, VT, VTH modification.

Automatic:

- By the electronic control unit BU-1-60 (see Electrical Accessories). The control unit is supplied separately.

Mounting features

- The fan is mounted directly into the window opening.



Fan ON – louver shutters OPEN



Fan OFF – louver shutters CLOSED

Accessories

Speed controllers



Aerodynamic characteristics

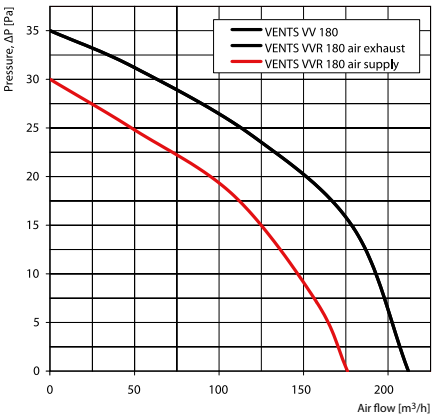

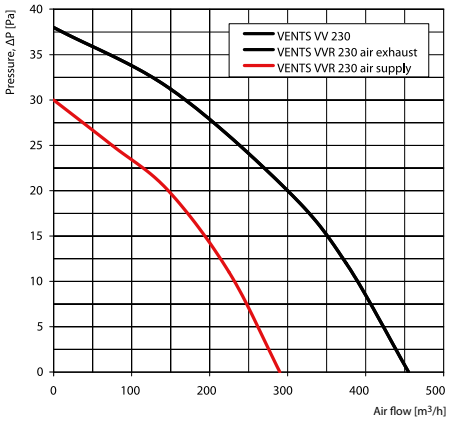

Technical data

Model		Frequency [Hz]	Voltage [V]	Power Consumption [W]	Current [A]	R.p.m.	Maximum air flow [m³/h]	Sound Pressure Level [dBA]*	Weight [kg]
VENTS VV 180	air exhaust	50/60	220-240	25	0.10	1400	212	31	1.6
VENTS VVR 180	air exhaust	50/60	220-240	25	0.10	1400	212	31	1.6
	air supply						176	31	
VENTS VV 230	air exhaust	50/60	220-240	29	0.13	1300	455	32	2.2
VENTS VVR 230	air exhaust	50/60	220-240	29	0.13	1300	455	32	2.2
	air supply						290	32	

*Sound pressure level measured in free space at a distance of 3 meters from the fan.

Mounting example



Overall dimensions

Model	Dimensions [mm]			
	A	B	C	D
VENTS VV 180	230	65	87	177
VENTS VVR 180	230	65	87	177
VENTS VV 230	295	74	85	237
VENTS VV 230	295	74	85	237

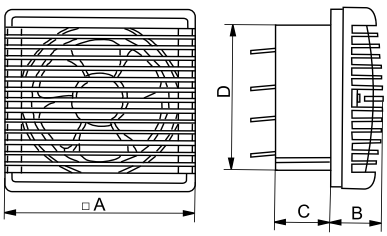

Certificates

IPX4

The fans meet the applicable safety and electromagnetic compatibility standards.

CENTRIFUGAL FANS

VENTS CF Series



Centrifugal single-speed fans with a built-in filter for exhaust ventilation with the air flow of up to 122 m^3/h. Compatible with Ø 100 mm air ducts.





Centrifugal fans
VENTS Fantom Series
Air flow up to 110m³/h
page 154



Centrifugal fans
VENTS Fantom DC Series
Air flow up to 110 m³/h
page 156



Centrifugal fans
VENTS CF Series
Air flow up to 122 m³/h
page 158



Centrifugal fans
VENTS HBF Series
Air flow up to 482 m³/h
page 160

VENTS Fantom Series



Centrifugal fans for exhaust ventilation with the capacity up to 110 m³/h

Application

- Continuous or periodic exhaust ventilation of bathroom, showers and other utility spaces.
- Ventilation shaft mounting or duct connection.
- Designed for high-resistance ventilation duct systems.
- Compatible with Ø 100 mm air ducts.

Design

- Modern design and aesthetic look.
- The casing and the impeller are made of high-quality durable ABS plastic, UV resistant.
- The easy to use removable front panel and dishwasher washable filter element protects the fan internal components against dust penetration.
- The centrifugal fan impeller has forward-curved blades for high pressure and low noise levels.
- Protection rating IP45.

Motor

- Reliable and low-watt single-phase electric motor.
- The fan is equipped with ball bearings which are greased for full time of work and don't need any maintains.
- Designed for continuous operation and requires no maintenance.
- Equipped with overheating protection.

Modifications and Options

Fantom T – equipped with a turn-on delay timer (1, 2 or 5 minutes), a turn-off delay timer (5, 15 or 30 minutes) and an interval timer (for 30 minutes every 4 hours).

Fantom TH – equipped with a turn-on delay timer (1, 2 or 5 minutes), a turn-off delay timer (5, 15 or 30 minutes), an interval timer (for 30 minutes every 4 hours) and with humidity sensor. Humidity sensor has two operation modes. Manual mode allows setting the humidity threshold in range of 60%, 70%, 80% or 90%. If this threshold is exceeded, the fan turns on or switches to higher speed.

Auto – intelligent humidity control. This mode provides for humidity threshold change in automatic mode. The fan independently selects the optimum humidity threshold for the room in which it is installed. Fan operation algorithm is selected based on analysing the statistical data of indoor humidity level.

Fantom TP – equipped with a regulated timer and a turn-on delay timer (1, 2 or 5 minutes), a turn-off delay timer (5, 15 or 30 minutes), an interval timer (for 30 minutes every 4 hours) and microwave motion sensor, which works through the front panel.

Mounting features

- Flexible duct application is recommended in case of remote location of the ventilation shaft. The air duct is connected to the fan exhaust flange through a clamp.
- Fixed to wall by self-tapping screws.
- Suitable for ceiling mounting.

Accessories

Air ducts | Grilles and hoods | Speed controllers | Clamps



Aerodynamic characteristics

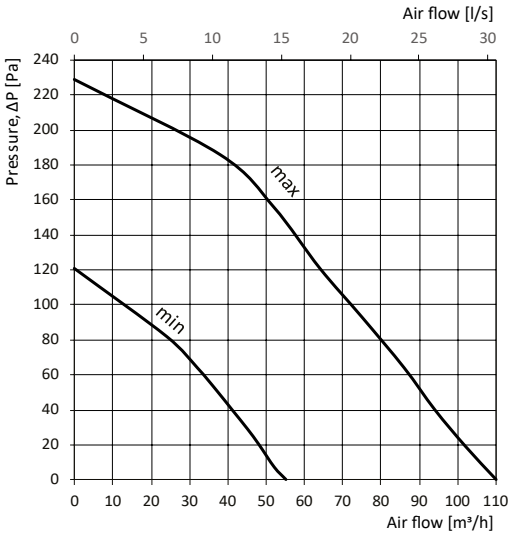

Overall dimensions

Model	Dimensions [mm]			
	B	H	L	L1
VENTS Fantom	215	256	115	37

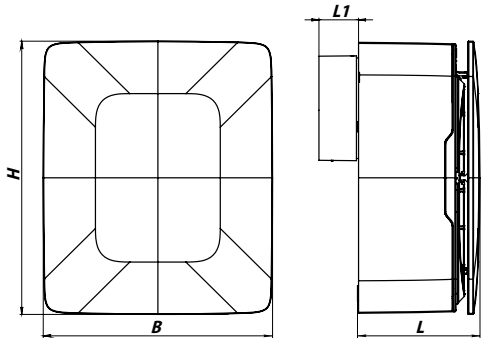

Technical data

Model	Speed	Frequency [Hz]	Voltage [V]	Power consumption [W]	Current [A]	Maximum air capacity [m³/h]	Maximum air capacity [l/s]	SFP [W/l/s]	Sound Pressure Level [dBA]*	IP
VENTS Fantom	min.	50	220-240	11	0.081	55	15	0.72	20	IP45
	max.			26	0.116	110	31	0.85	36	

*Sound pressure level measured in free space at a distance of 3 meters from the fan.

Mounting examples





Certificates

IP45

The fans meet the applicable safety and electromagnetic compatibility standards.

VENTS Fantom DC
Series



Centrifugal fans for exhaust ventilation with the capacity up to 110 m³/h with extra low power consumption from 1.4 W

Application

- Continuous or periodic exhaust ventilation of bathroom, showers and other utility spaces.
- Ventilation shaft mounting or duct connection.
- Designed for high-resistance ventilation duct systems.
- Compatible with Ø 100 mm air ducts.
- Communication with Smart Home applications through Wi-Fi.

Design

- Modern design and aesthetic look.
- The casing and the impeller are made of high-quality durable ABS plastic, UV resistant.
- The easy to use removable front panel and dishwasher washable filter element protects the fan internal components against dust penetration.
- The centrifugal fan impeller has forward-curved blades for high pressure and low noise levels.
- Protection rating IP45.

Motor

- Reliable and low-watt DC electric motor.
- The fan is equipped with ball bearings which are greased for full time of work and don't need any maintains.
- Designed for continuous operation and requires no maintenance.
- Equipped with overheating protection.

Modifications and Options

- **Fantom DC** – the basic fan is equipped by default with a turn-on delay timer (1, 2 or 5 minutes), a turn-off delay timer (5, 15 or 30 minutes), an interval timer (for 30 minutes every 4 hours) and with humidity sensor.
- Humidity sensor has two operation modes.
- Manual mode allows setting the humidity threshold in range of 60%, 70%, 80% or 90%. If this threshold is exceeded, the fan turns on or switches to higher speed.
- Auto – intelligent humidity control. This mode provides for humidity threshold change in automatic mode. The fan independently selects the optimum humidity threshold for the room in which it is installed. Fan operation algorithm is selected based on analysing the statistical data of indoor humidity level.



Fantom DC TP – in addition to a turn-on delay timer (1, 2 or 5 minutes), a turn-off delay timer (5, 15 or 30 minutes), an interval timer (for 30 minutes every 4 hours) and humidity sensor of basic fan, Fantom DC TP has also microwave motion sensor, which works through the front panel.

Mounting features

- Flexible duct application is recommended in case of remote location of the ventilation shaft. The air duct is connected to the fan exhaust flange through a clamp.
- Fixed to wall by self-tapping screws.
- Suitable for ceiling mounting.

Accessories

Air ducts | Grilles and hoods | Speed controllers | Clamps



Aerodynamic characteristics

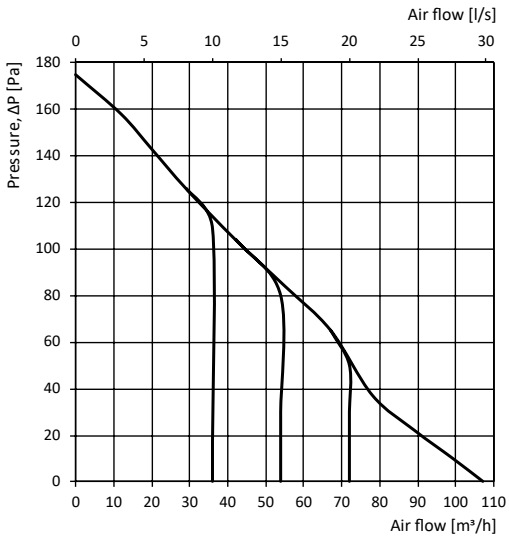

Overall dimensions

Model	Dimensions [mm]			
	B	H	L	L1
VENTS Fantom DC	215	256	115	37

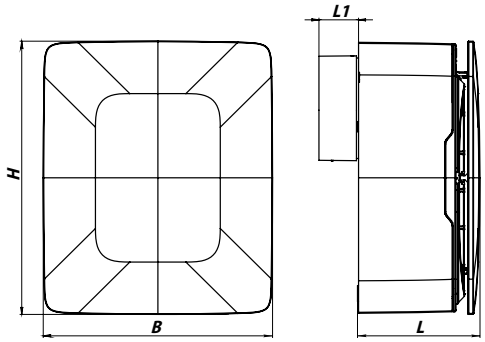

Technical data

Model	Speed	Frequency [Hz]	Voltage [V]	Maximum Power consumption [W]	Current [A]	Maximum air capacity [m³/h]	Maximum air capacity [l/s]	Maximum Sound Pressure Level [dBA]*	IP
VENTS Fantom DC	1	50	220-240	1.4-15	0.059 – 0.633	36	10	34	IP45
	2					54	15		
	3					72	20		
	4					110	30.6		

*Sound pressure level measured in free space at a distance of 3 meters from the fan.

Mounting examples





Certificates

IP45 The fans meet the applicable safety and electromagnetic compatibility standards.

VENTS CF
Series



Centrifugal fans for exhaust ventilation with the capacity up to 122 m³/h

Application

- Continuous or periodic exhaust ventilation of bathroom, showers, kitchens and other utility spaces.
- Ventilation shaft mounting or duct connection.
- Designed for high-resistance ventilation duct systems.
- Compatible with Ø 100 mm air ducts.

Design

- Modern design and aesthetic look.
- The casing and the impeller are made of high-quality durable ABS plastic, UV resistant.
- The easy to use removable grille with a filter element protects the fan internal components against grease and dust penetration and makes it suitable for kitchen exhaust ventilation.
- The basic **CF** fan modification includes a dust filter. Aluminium grease filter configurations are also available (**CFA** model).
- The centrifugal fan impeller has forward-curved blades for high pressure and low noise levels.
- The centrifugal fan impeller has forward-curved blades for high pressure and low noise levels.
- Protection rating IP2X.

Motor

- Reliable and low-watt single-phase electric motor.
- The basic motor modification includes plain bearings.
- The „turbo" modification includes the motor equipped with ball bearings mounted on specially designed vibration dampers.
- Designed for continuous operation and requires no maintenance.
- Equipped with overheating protection.

Modifications and Options

CFA – fan with an aluminium grease filter.

CF 100 turbo – high-powered motor. The motor is equipped with ball bearings for long service life (appr. 40 thousand hours) and mounted on specially designed vibration mounting. The bearings are maintenance-free and contain enough grease for the entire operating period.

CF 100 T – equipped with a regulated timer with the operating time from 2 to 30 minutes.

CF 100 TH – equipped with a timer with the operating time from 2 to 30 minutes and a humidity sensor with the threshold value from 60 to 90 %.

CF 100 V – equipped with a pull cord switch.

CF 100 VT – equipped with a pull cord switch and a regulated timer with the operating time adjustable from 2 to 30 minutes.

CF 100 VTH – equipped with a pull cord switch, regulated timer with the operating time adjustable from 2 to 30 minutes and a humidity sensor with the operating threshold range from 60 to 90 %.

CF 100 TP – equipped with a regulated timer and a motion sensor with the sensitivity area from 1 to 4 m and the detection angle up to 100°.

CF 100 12 – modification with low-voltage motor. 12 V AC power supply.

Control

Manual:

- The fan is controlled by a room light switch. It is not included in the delivery package.
- The fan is controlled by the built-in pull cord switch **V**. Not applied in case of ceiling mounting.
- Speed control is possible through a thyristor speed controller (see Electrical Accessories). Several fans may connected to the same controller. Speed controllers can not be connected to the fans with T, TH, TP, VT, VTH modification.

Automatic:

- By the electronic control unit **BU-1-60** (see Electrical Accessories). The control unit is supplied separately.

Mounting features

- Suitable for external or built-in mounting.
- Flexible duct application is recommended in case of remote location of the ventilation shaft. The air duct is connected to the fan exhaust flange through a clamp.
- Fixed to wall by self-tapping screws or fixing brackets.
- Suitable for ceiling mounting.
- For 12 V low-voltage motor fan connection to 220 V/50 Hz power mains use the step-down transformer TRF 220/12-25 that is available upon separate order.

Accessories

Air ducts | Grilles and hoods | Speed controllers | Clamps | Replaceable filters



Aerodynamic characteristics

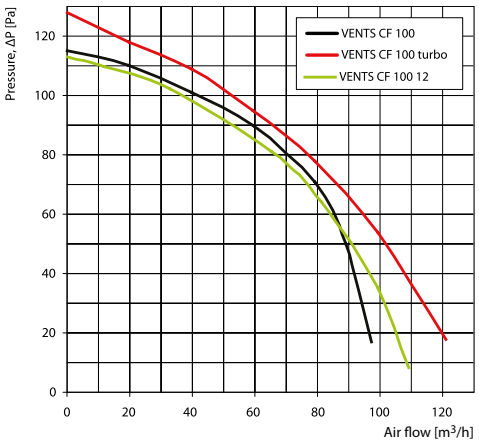

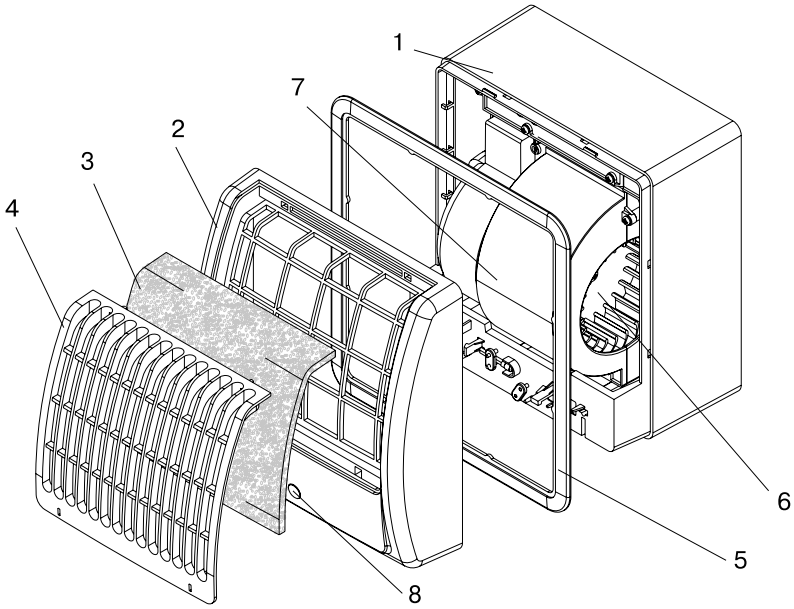

1. Casing
2. Removable cover
3. Filter
4. Grille
5. Decorative frame
6. Impeller
7. Scroll casing
8. Light indicator

Technical data

Model	Frequency [Hz]	Voltage [V]	Power Consumption [W]	Current [A]	R.p.m.	Maximum air flow [m³/h]	Sound Pressure Level [dBA]*	Weight [kg]
VENTS CF 100	50	220-240	16	0.12	2250	98	36	1.20
VENTS CF 100 turbo	50	220-240	29	0.170	2500	122	38	1.30
VENTS CF 100 12	50	12	24	3.00	2300	110	37	1.2

*Sound pressure level measured in free space at a distance of 3 meters from the fan.

Mounting examples



Wall surface mounting



Wall flush mounting

Overall dimensions

Model	Dimensions [mm]						
	Ø D	B	H	L	L1	L2	L3
VENTS CF 100	100	180	195	132	59	73	26

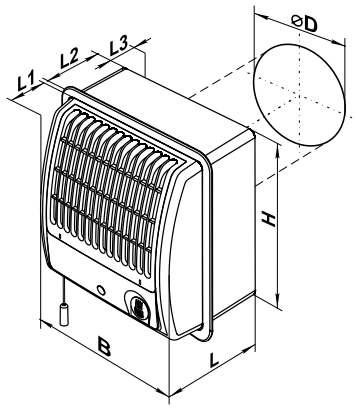

Certificates

IP2X

The fans meet the applicable safety and electromagnetic compatibility standards.

VENTS HBF series



Centrifugal exhaust low-noise and low-energy fans for ceiling installation with air flow up to **482 m³/h**

Application

- Continuous or periodic exhaust ventilation of bathrooms, showers and other residential premises.
- Designed for high-resistance ductwork.

Motor

- Maintenance-free bearings contain enough grease for 40 000 hours continuous operation.

Modifications and options

HBF T – equipped with an adjustable timer. Running time: from 2 to 30 minutes.

HBF TH – equipped with an adjustable timer from 2 to 30 minutes and a humidity sensor adjustable from 60% to 90%.

Design

- The centrifugal impeller is equipped with forward curved blades for high operating pressure and low noise.
- Replaceable decorative panels of matt black and white colors, round and square shapes.



RV HBF 250 Round | RV HBF 250 Round Black | RV HBF 250 Square | RV HBF 250 Square Black

- The motor impeller is made of high-quality durable ABS plastic.
- HBF 250 Light Three-Color fans are equipped with a three-color energy-efficient LED lamp for comfortable warm, cold or neutral lighting.



RV HBF 250 Round Light Three-Color | RV HBF 250 Square Light Three-Color

Mounting features

- The fan is mounted directly into the ventilation shaft.
- Flexible duct connection is recommended in case of remote ventilation shaft location.

Design features



Accessories

Air ducts | Grilles and hoods | Speed controllers | Clamps



Technical data

Model	HBF 250
Frequency [Hz]	50
Voltage [V]	220-240
Power [W]	57
Current [A]	0.025
RPM [min^{-1}]	1085
Maximum air capacity [m^3/h]	482
Maximum air flow [l/s]	134
Sound pressure level [dBA*]	36
Weight [kg]	2.5
IP	IPX4

*The sound pressure level was measured at 3 m away from the fan, in free space.

Aerodynamic characteristics

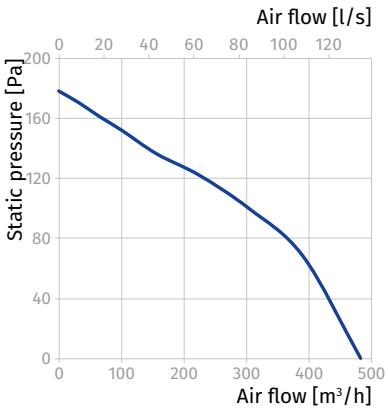

Technical data for LED lamps

Model	RV HBF 250 Round Light Three-Color	RV HBF 250 Square Light Three-Color
Power [W]	50	50
Luminous flux [lm]	220-240	220-240
Color temperature [K]	57	57
Beam angle [°]	0.025	0.025

Overall dimensions

Modell	a	b	c	Ød
HBF 250 Round	198	38	330	148
HBF 250 Square	198	38	330	148

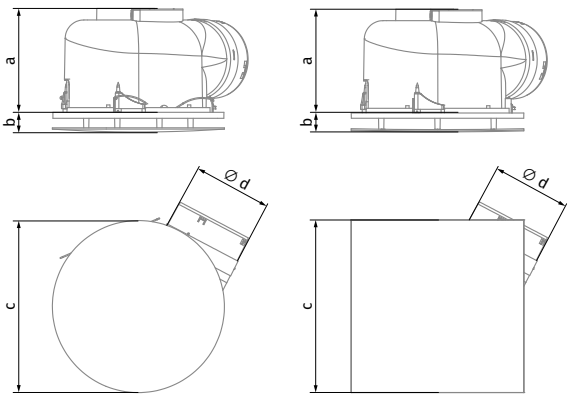

HBF 250 Round HBF 250 Square

Application examples



Certificates

IPX4 The fans meet the applicable safety and electromagnetic compatibility standards.

Back valve
KO series



Application

- To prevent air back drafting.
- Does not disturb passive indoor ventilation.
- For domestic fan series VENTS M, M1, D, S, M3, X, X1, LD, LD Fresh time, Silenta-M, Silenta-S, Modern, Vitro star, Z star, X star.
- Designed for connection to Ø 100, 125 and 150 mm air ducts.

Design

- Casing made of ABS plastic and the membrane is made of special light polymer.

Mounting

- Back valve is mounted on a fan with special fasteners provided on the fan spigot.



Overall dimensions

Model	Dimensions [mm]	
	Ø D	a
KO 100	100	14
KO 120	120	14
KO 125	125	14
KO 150	150	14

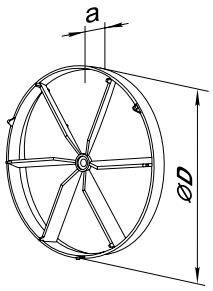

Window flange
FO Series



Application

- The window flange is designed for mounting of the fans in the window single-thickness sheet glass, 3-4 mm thick.
- Connecting diameters: 100, 125 and 150 mm.
- Connection to the fan spigot by means of mounting ribs provides reliable fixation of the fan.
- Applicable for all VENTS fans except for VKO, VKO1, iFan, Quiet, MAO, CF.

Mounting

- Fan installation in the window sheet glass.

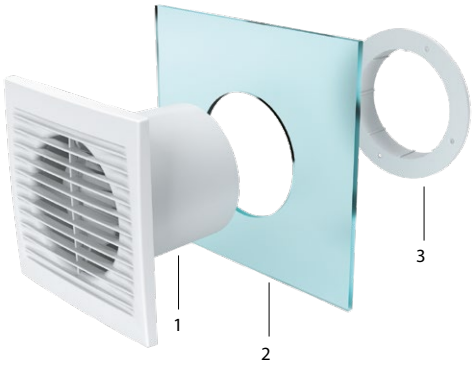

1. Fan.
2. Single window glass.
3. Window flange.



Inner side view.

Overall dimensions

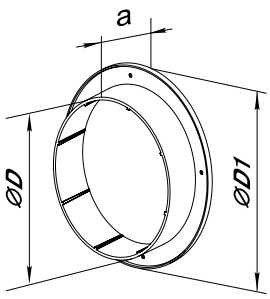

Model	Dimensions [mm]		
	Ø D	Ø D1	a
FO 100	100	120	25
FO 125	125	147	25
FO 150	150	172	25

Various mounting options for various design features

- VKO and VKO1 Series

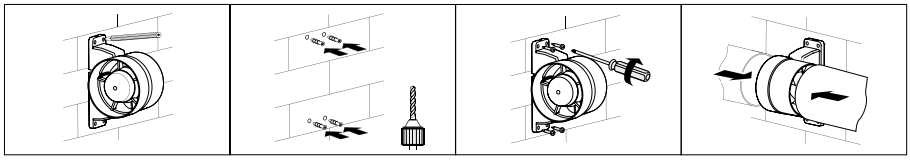

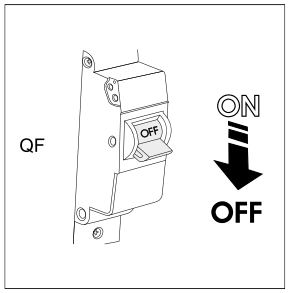

- K, K1, PF, PF1, F and F1 Series

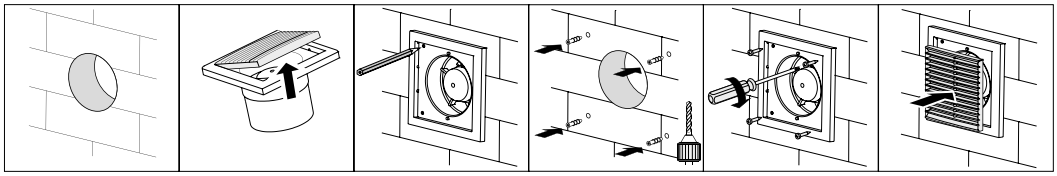

- M, M3, MA and MA1 Series

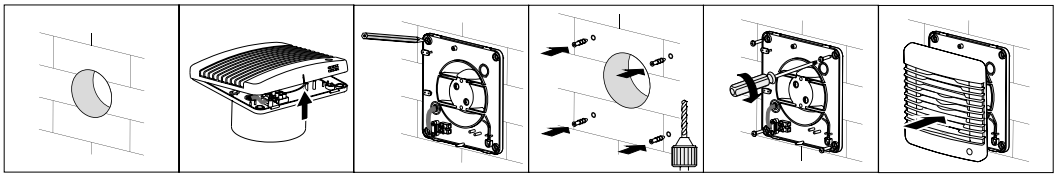

- D, LD, S, X, X1, X Star Series

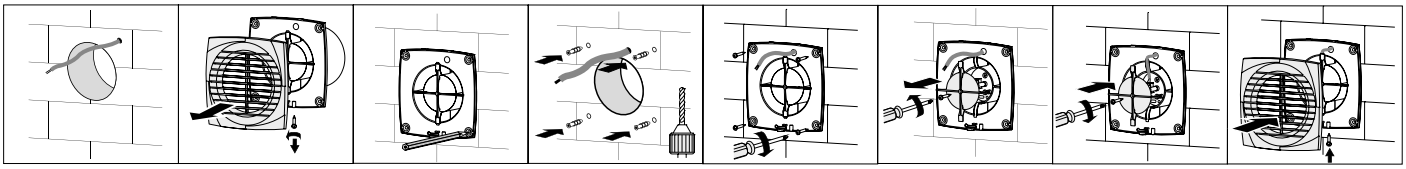

- MAO Series

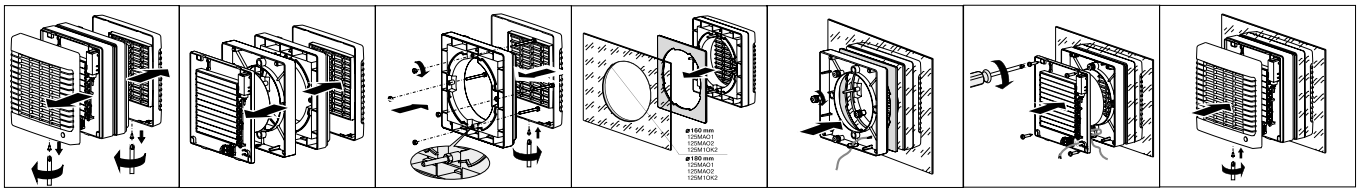

- CF Series

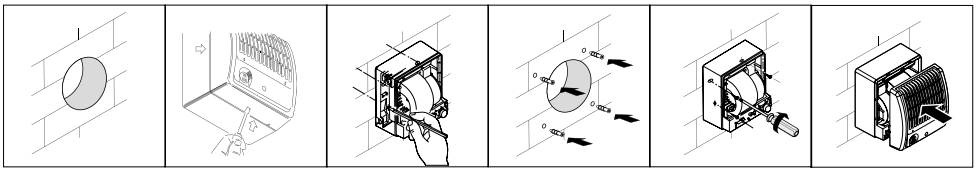

Control of built-in fan functions

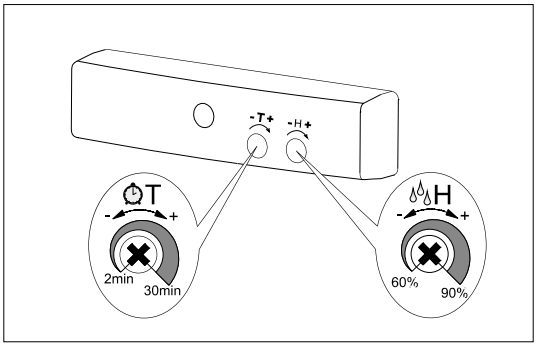

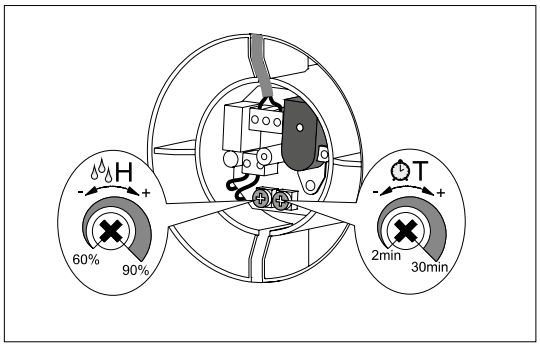

- Humidity sensor threshold value is adjusted with potentiometer **H** by turning its control knob clockwise to increase or counter-clockwise to decrease the humidity threshold value.

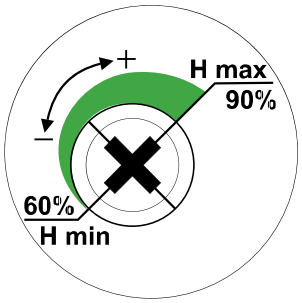

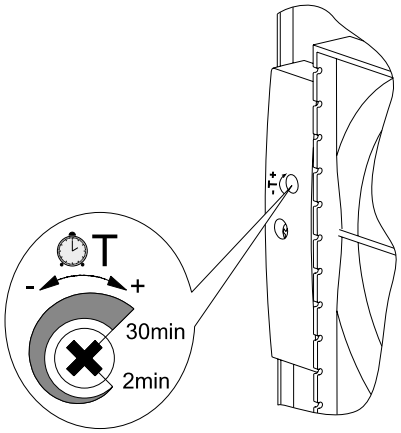

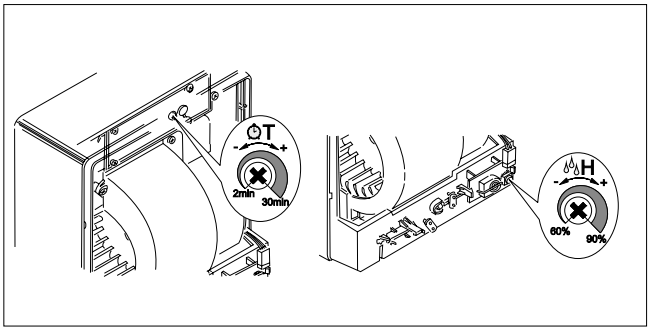

Fan maintenance and cleaning

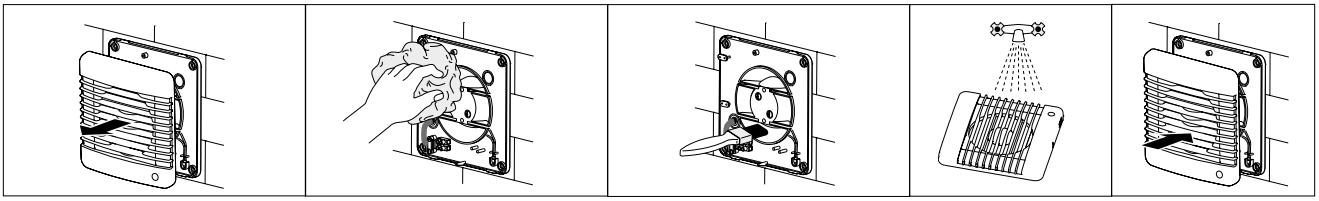

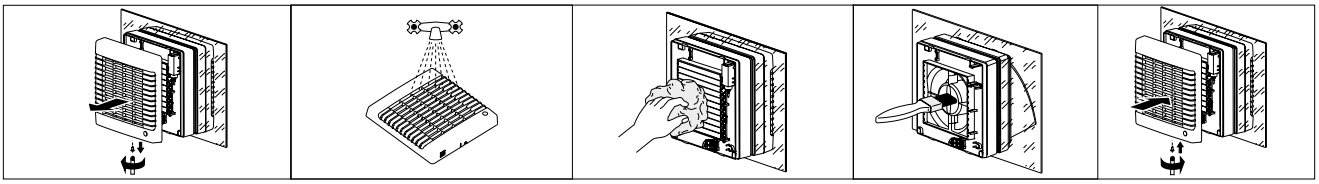

Wall surface mounting

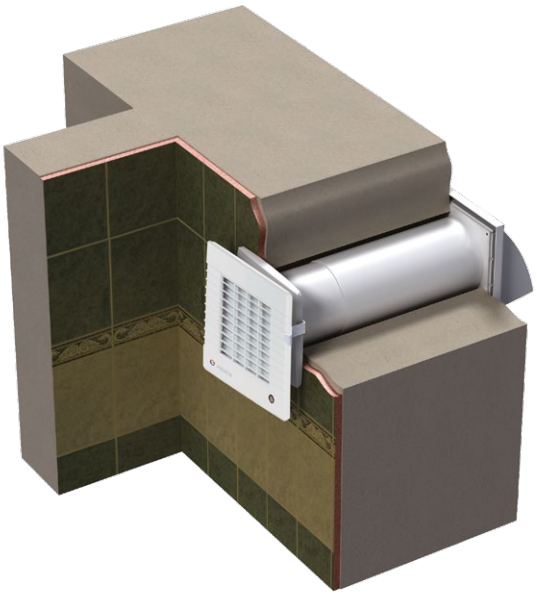

Direct air exhaust through the wall

Ceiling mounting

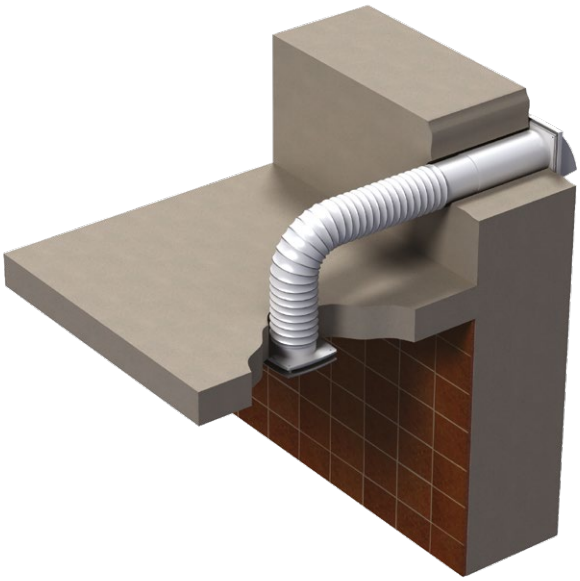

Exhaust ventilation through the ceiling and wall

Wall surface mounting

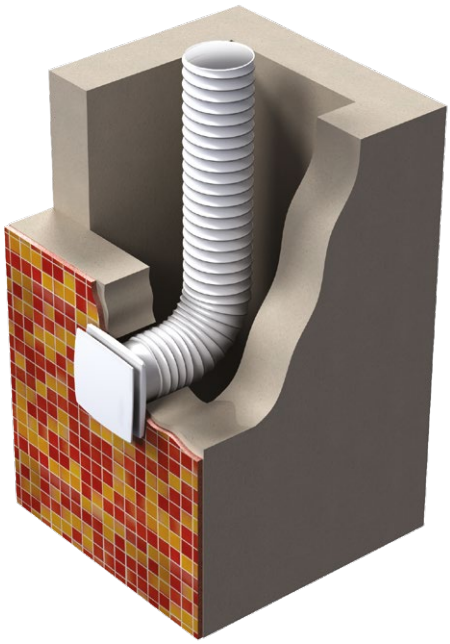

Air exhaust through the ventilation shaft

Wall surface mounting

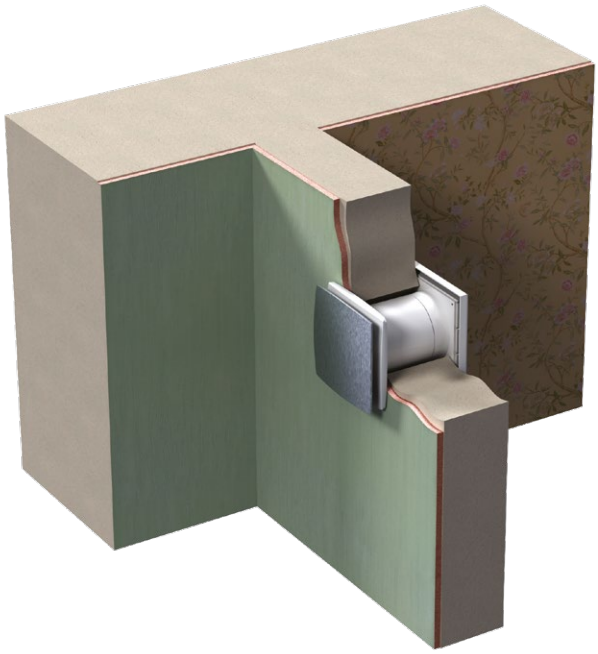

Air exhaust through the wall. For warm air distribution from a room with a fireplace to adjacent premises

Wiring diagram for the fans equipped with a built-in switch

1

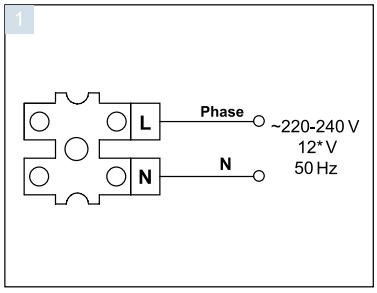

Wiring diagram for the fans without built-in switch

2

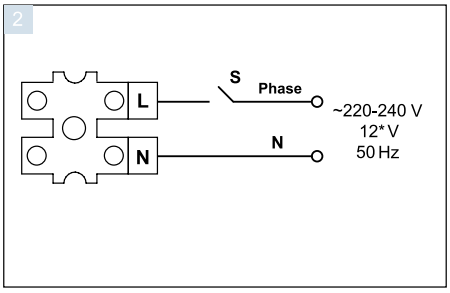

Wiring diagram for the fans equipped with a timer / timer, humidity sensor and a built-in switch

3

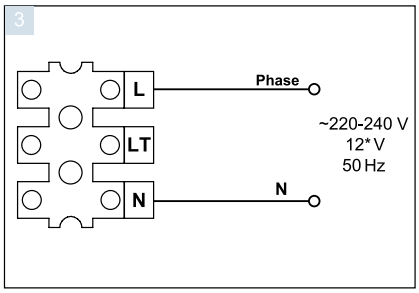

Wiring diagram for the fans equipped with a timer / timer with a humidity sensor without built-in switch

4

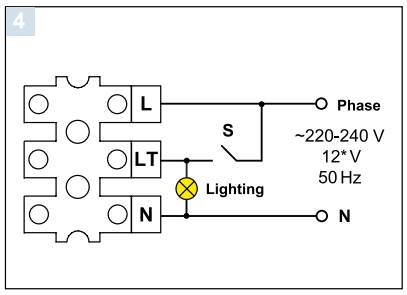

Wiring diagram for the fans with a light lamp. Separate activation of the fan and the built-in lamp.

5

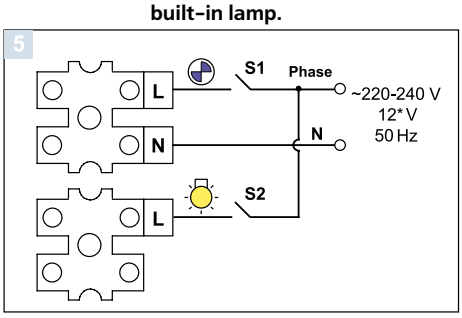

Wiring diagram for the fans with a light lamp. Parallel activation of the fan and the built-in lamp.

6

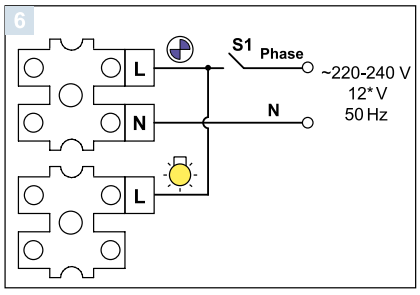

Wiring diagram for the fans with an light lamp and grounding. Separate activation of the fan and the built-in lamp.

7

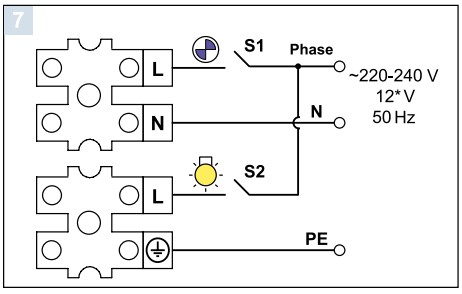

Wiring diagram for the fans with a light lamp and grounding. Parallel switching of the fan and the built-in lamp.

8

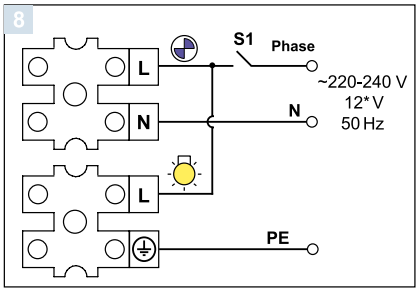

Wiring diagram for the fans with grounding

9

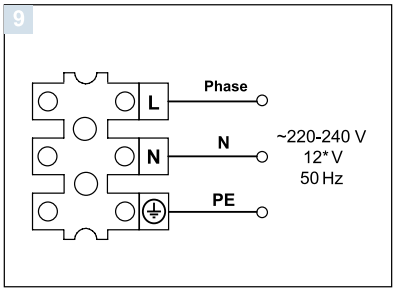

* – only for fans designed for 12 V rated voltage (specified on the fan casing and packing).
S, S1, S2 – external switches.

Operating logic of the fans with optional equipment

- The fan equipped with a **timer** is activated by the control voltage supplied to LT input. After the control voltage is disconnected the fan continues operating within the time period within 2 to 30 minutes according to the timer settings. The turn-off delay time is adjusted by turning the respective potentiometer T control knob clockwise to increase and counter-clockwise to reduce it.
- The fan equipped with a **timer and humidity sensor** is activated by the control voltage supplied to LT input or in case of exceeding the preset humidity threshold value adjustable from ~60 % to ~90 %. After the control voltage is disconnected or as the humidity level H drops below the set threshold the fan continues operating within the time period within 2 to 30 minutes according to the timer settings. The turn-off delay time and the threshold humidity level are adjusted by turning the control knob of the respective potentiometer T for timer and H for humidity sensor clockwise to increase and counter-clockwise to reduce the set value. To set the maximum humidity level (90 %) set the potentiometer control knob for H max position.
- The fan equipped with a **timer and motion sensor** is activated in case of the moving detection at the distance from 1 m to 4 m with 100° detection angle. After motion is off the fan continues operating within the time period within 2 to 30 minutes according to the timer settings. The turn-off delay time is adjusted by turning the respective potentiometer T control knob clockwise to increase and counter-clockwise to reduce it.
- Wiring diagram for connection of the light lamp to the fan timer operated by the common switch is shown on diagram 4. Upon the light lamp disconnection the fan continues operating according to the timer setting within the set time period.

ELECTRIC ACCESSORIES

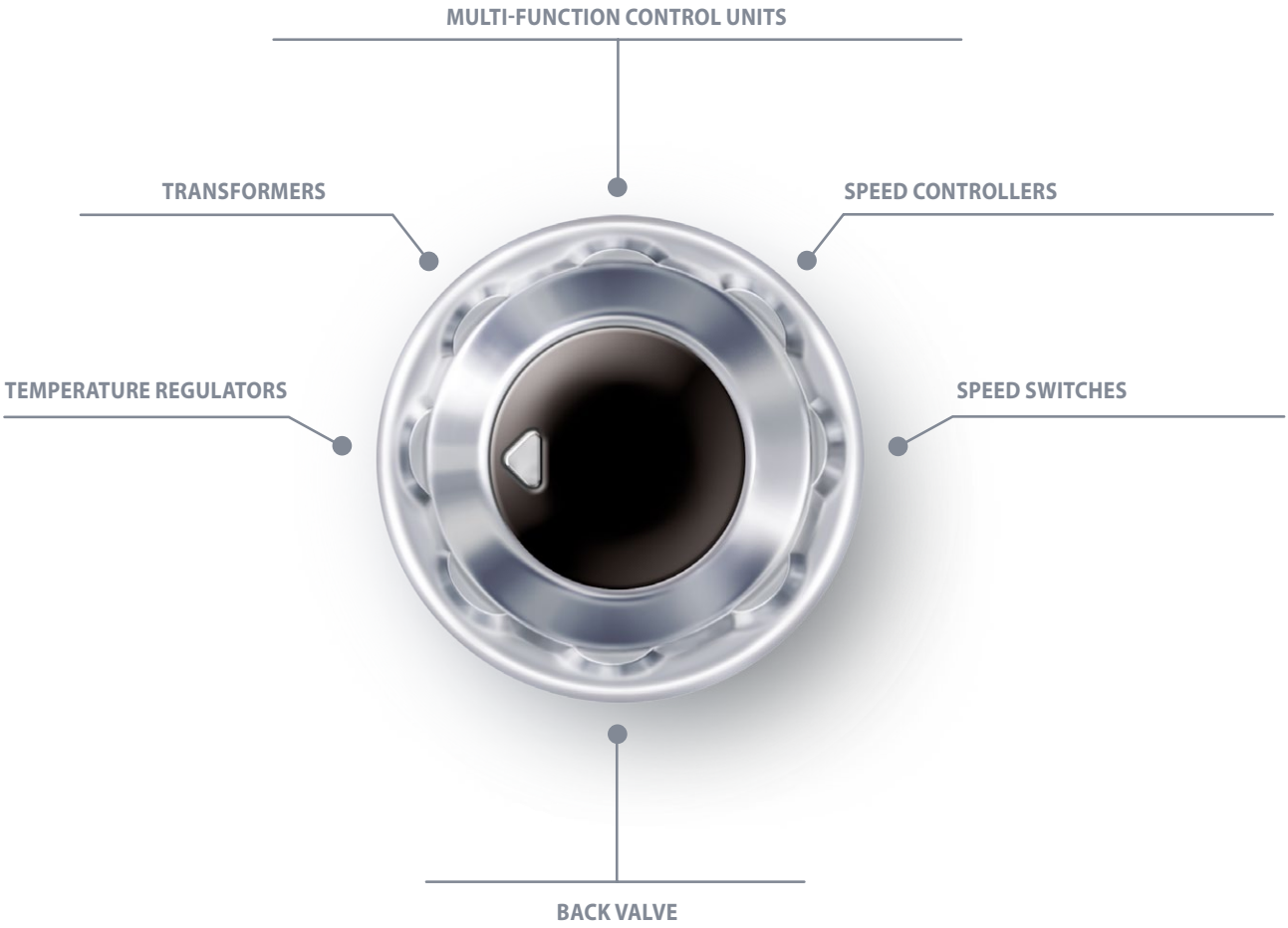



Control unit

page 170



Thyristor speed controllers

page 171



Autotransformer speed controller

page 177



Speed switches for multiple-speed fans

page 178



Temperature regulators

page 181



Temperature controller

page 182



Transformers

page 184

Control unit
BU-1-60



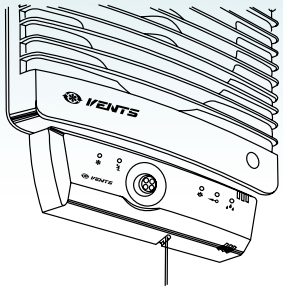

Application

- Automation and control of residential fan operation. It includes automatic controls as timer, humidity sensor, photosensor and motion sensor. All these options can be used in any combination.

Design

- The control unit casing is made of high-quality plastic.
- The front panel is equipped with light indicators that display the current operating mode.
- Automatic operation with selected mode is possible. The switches are used to activate required operation modes depending on a specific application. The control units are available in several modifications:
- Turn-off delay timer keeps the fan running for a set time period after turning the built-in or external switch off that provides extra ventilation in the premise. The control unit switches the fan off from 5 sec to 30 minutes.
- Cyclic timer operation: the cyclic operation mode allows switching the fan on and off with set time intervals. Operation or standstill duration is adjusted from 5 sec to 30 min. The fan switches on and operates within pre-set time period followed by a pause according to timer settings. After that the cycle is renewed.
- Humidity sensor switches the fan on as the humidity level in the premise increases above the set threshold. As it drops back the control unit switches the fan off. Humidity threshold is user-adjustable.
- Built-in photosensor is sensitive to illumination in the room and switches the fan automatically on.
- «Dark mode»: The control unit switches the fan on after the light is off. The operation duration is adjustable from 5 sec to 30 min and the photosensor threshold is set by the regulator.
- «Light mode»: The control unit switches the fan on after the light is on. As light is off the fan continues operating and turns off as the turn-off delay timer requires from 5 sec to 30 min. If the light is on more than 60 minutes the fan switches off. The photosensor threshold is set by the control unit.
- The motion sensor responds to human motion in the sensitivity area and switches the fan automatically on. When motion is not registered the control unit switches the fan off as the turn-off delay timer requires from 5 sec to 30 min. Use of the motion sensor makes the fan control easy and is especially suitable for periodically visited premises. The sensitivity area is 4 m max. and the detection angle up to 100°.

Mounting

- The control unit is designed for indoor installation, both close to the fan and remote. The installation place is selected with respect to the furniture location and walking routes.

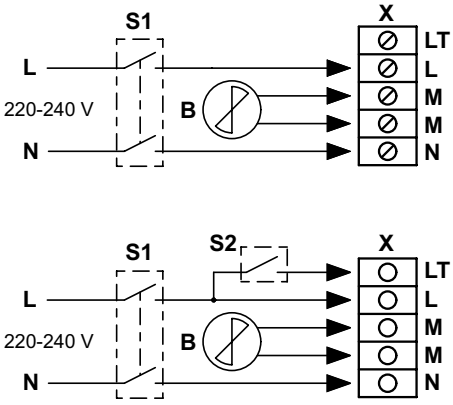

Wiring diagram of the control unit

B – fan;
S1 – automatic circuit breaker;
S2 – external switch;
X – input terminal block BU.

Model	Options				
	switch	timer	humidity sensor	motion sensor	photosensor
VENTS BU-1-60	●	●	●	●	●
VENTS BU-1-60 TF		●			●
VENTS BU-1-60 THF		●	●		●
VENTS BU-1-60 THPF		●	●	●	●

Technical data

	BU-1-60
Voltage [V] at 50 Hz	1~ 230
Max. load power [W]	60
Maximum load current [A]	0.3
Overall dimensions LxBxH [mm]	151x46x27
Maximum ambient temperature [°C]	+40
Protection	IP34
Weight [kg]	0.075

Sensor speed controller SRS-1



Application

- Applied in ventilation systems for turning the fans on/off and speed control of single-phase voltage controlled fan motors. Several fans can be connected to one speed controller if their total current does not exceed the maximum controller current.

Design

- The casing is made of plastic and the sensor panel is made of hardened glass. The sensor panel has On/Off button for speed control from minimum to maximum. The set speed level is displayed on the LED display. The speed controller has high control accuracy.

Mounting

- The controller is designed for indoor mounting into standard round electric junction boxes.

Technical data:

	SRS-1
Voltage [V/50/60 Hz]	230
Maximum load current [A]	1
Cable cross section	0.35 up to 1 mm^2
Temperature range [°C]	from -10 up to +45
Humidity range	5 % up to 80 % (no condensation)
Service life	100 000 switching operations
Ingress Protection	IP30
Weight [g]	138

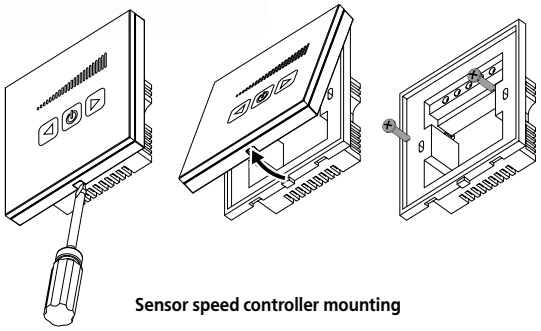

Sensor speed controller mounting

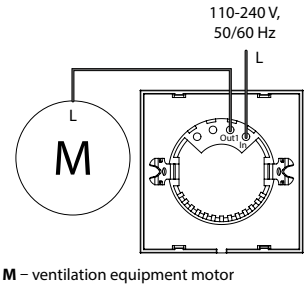

M – ventilation equipment motor

Wiring diagram

Overall dimensions:

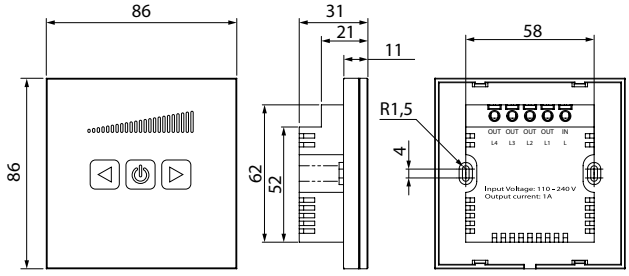

Speed controller
RS-1-300



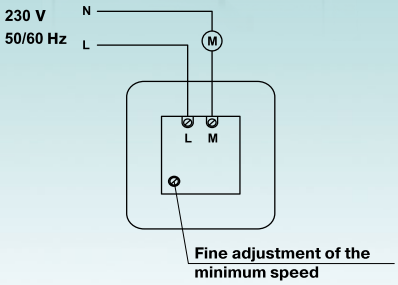

Controller wiring diagram

Application

- Used in ventilation systems for switching on/off and speed control of single-phase fan motors with voltage control.
- Several fans can be controlled from the same unit in case the total consumption current does not exceed the permissible controller current value.

Design and control

- The casing is made of plastic.
- The controller is featured with high efficiency and control accuracy.
- Turn to maximum speed by rotating the control knob.
- Regulation starts from the minimum to the maximum voltage value. The maximum speed produces the smoothest rotation.
- The minimum speed value is set by a variable resistor located at the controller control panel.

Protection

- For overload protection the controller is equipped with a replaceable melting fuse.

Mounting

- The controller is designed for indoor mounting into special flush mounting junction box MKV-2 (under separate order) or into standard round electric junction boxes.

Technical data

	RS-1-300
Voltage [V] at 50 Hz	1~ 230
Rated current [A]	1.5
Overall dimensions LxBxH [mm]	95x85x60
Maximum ambient temperature [°C]	40
Protection	IP40
Weight [kg]	0.11

FLUSH MOUNTING JUNCTION BOX



MKV-2

Speed controller
RS-1-400



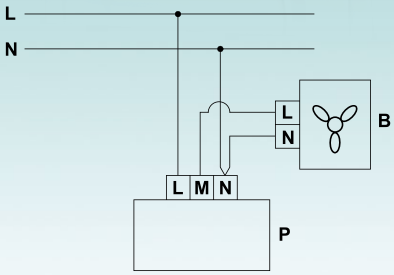

Controller wiring diagram

Application

- Used in ventilation systems for switching on/off and speed control of single-phase fan motors with voltage control.
- Several fans can be controlled from the same unit in case the total consumption current does not exceed the permissible controller current value.

Design and control

- The casing is made of plastic.
- The controller is featured with high efficiency and control accuracy.
- Turn to maximum speed by rotating the control knob.
- Regulation starts from the minimum to the maximum voltage value. The maximum speed produces the smoothest rotation.
- The minimum speed value is set by a variable resistor located at the controller circuit board.

Protection

- The input circuit of the speed controller is equipped with a fuse for overload protection.
- The controller is equipped with a transient filter.

Mounting

- The controller is designed for indoor mounting into special flush mounting (MKN-3) or surface mounting (MKV-4) junction box (under separate order) or into standard round electric junction boxes.

Technical data

	RS-1-400
Voltage 50/60 Hz [V]	1~ 230
Rated current [A]	1.8
Overall dimensions LxBxH [mm]	78x78x63
Maximum ambient temperature [°C]	35
Protection	IP40
Weight [kg]	0.11

MOUNTING JUNCTION BOX

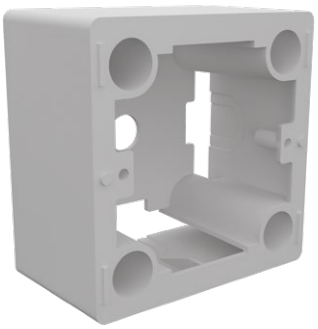

MKN-3 (for surface mounting)



MKV-3 (for flush mounting)

Speed controller
RS-1-0,5



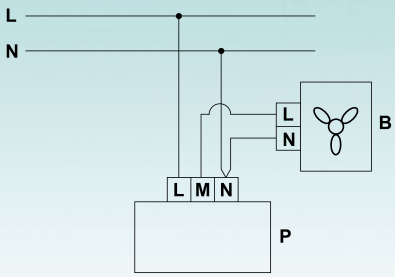

Controller wiring diagram

Application

- Used in ventilation systems for switching on/off and speed control of single-phase fan motors with voltage control.
- Several fans can be controlled from the same unit in case the total consumption current does not exceed the permissible controller current value.

Design and control

- The casing is made of plastic.
- The controller is featured with high efficiency and control accuracy.
- Turn to maximum speed by rotating the control knob.
- Regulation starts from the minimum to the maximum voltage value. The maximum speed produces the smoothest rotation.
- The minimum speed value is set by a variable resistor located at the controller circuit board.

Modifications

- **RS-1-0,5** – a speed controller without a mounting junction box.
- **RS -1-0,5 N** – a speed controller, completed with a surface mounting junction box.
- **RS-1-0,5 V** – a speed controller, completed with a flush mounting junction box.
- **RS-1-0,5 NV** – a speed controller, completed with surface and flush mounting junction boxes.

Protection

- The input circuit of the speed controller is equipped with a fuse for overload protection.
- The controller is equipped with a transient filter.

Mounting

- The controller is designed for indoor mounting into special surface mounting (MKN-3) or flush mounting (MKV-4) junction box (under separate order) or into standard round electric junction boxes.

Technical data

	RS-1-0,5
Voltage 50/60 Hz [V]	1~ 230
Rated current [A]	0.5
Overall dimensions LxBxH [mm]	78x78x63
Maximum ambient temperature [°C]	35
Protection	IP40
Weight [kg]	0.11

MOUNTING JUNCTION BOX

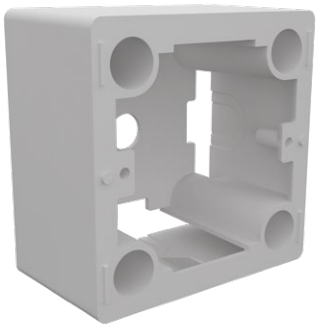

MKN–3 (for surface mounting)

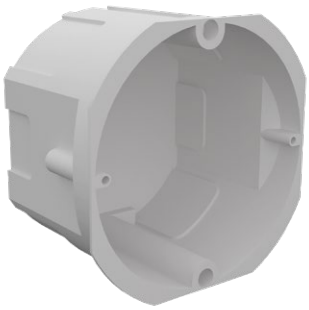

MKV–4 (for flush mounting)

Speed controller
RS-...N (V)



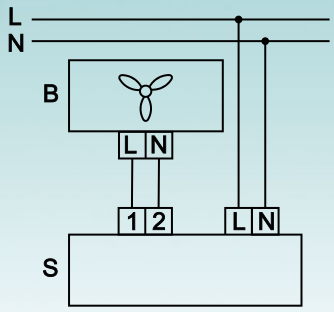

Controller wiring diagram

Application

- Used in ventilation systems for switching on/off and speed control of single-phase fan motors with voltage control.
- Several fans can be controlled from the same unit in case the total consumption current does not exceed the permissible controller current value.

Design and control

- The controller casing is made of plastic and on/off button with light indicator.
- The controller is featured with high efficiency and control accuracy.
- Regulation starts from the minimum to the maximum voltage value. The maximum speed produces the smoothest rotation.
- The minimum speed value is set by a variable resistor located at the controller circuit board.

Protection

- The input circuit of the speed controller is equipped with a melting fuse for overload protection.
- The controller is equipped with a transient filter.

Mounting

- The regulator is designed for indoor installation.
- The casing design allows mounting the controller on the wall (N modification) or inside the wall (V modification).

Technical data

	RS-1 N (V)	RS-1.5 N (V)	RS-2 N (V)	RS-2,5 N (V)
Voltage [V] at 50 Hz	1~ 230	1~ 230	1~ 230	1~ 230
Rated current [A]	1.0	1.5	2.0	2.5
Overall dimensions LxBxH [mm]	162x80x70	162x80x70	162x80x70	162x80x70
Maximum ambient temperature [°C]	40	40	40	40
Protection	IP30	IP30	IP30	IP30
Weight [kg]	0.3	0.3	0.3	0.3

Speed controller
RS...PS



Application

- Used in ventilation systems for switching on/off and speed control of single-phase fan motors with voltage control.
- Several fans can be controlled from the same unit in case the total consumption current does not exceed the permissible controller current value.

Design and control

- The casing is made of plastic.
- Equipped with a light indication of the controller operating status.
- The controller is featured with high efficiency and control accuracy.
- Start the controller by pressing the button.
- Regulation starts from the minimum to the maximum voltage value. The maximum speed produces the smoothest rotation.
- The minimum speed value is set by a variable resistor located at the controller circuit board.
- The controller has an additional terminal (230 V) for connecting external equipment.

Protection

- The input circuit of the speed controller has overload protection.
- Controller is equipped with a transient filter.

Mounting

- The controller is suitable for indoor installation on the wall.
- The versatile casing design allows fan mounting on the wall or inside the wall.
- Suitable for installation inside the round junction boxes.

Technical data

	RS-0,5-PS	RS-1,5-PS	RS-2,5-PS	RS-4,0-PS
Voltage [V] at 50 Hz	1~ 230	1~ 230	1~ 230	1~ 230
Minimum current [A]	0.05	0.1	0.2	0.4
Maximum current [A]	0.5	1.5	2.5	4.0
Overall dimensions LxBxH [mm]	82x82x65	82x82x65	82x82x65	82x82x65
Maximum ambient temperature [°C]	35	35	35	35
Protection	IP44	IP44	IP44	IP44
Weight [kg]	0.16	0.19	0.19	0.26

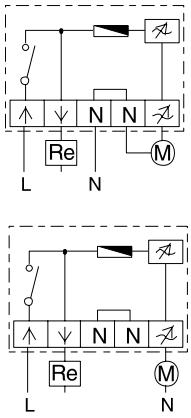

Controller wiring diagram

Speed controller
RSA-0,3



Application

- RSA speed controller is used for air flow control of single-speed fans with low power consumption by step speed control of electric motors. Several fans can be controlled from the same unit in case the total consumption current does not exceed the permissible controller current value.

Design

- The controller casing is made of high-quality plastic.
- Speed controller has four speeds with output frequency 160 V – 180 V – 200 V – 230 V. Speed controller is equipped with on/off light indicator and control knob for speed switch.

Protection

- For overload protection the controller is equipped with a replaceable melting fuse.

Mounting

- Transformer speed controller is designed for indoor installation. Provide sufficient air circulation for cooling of the internal circuits and do not install the speed controller above heating equipment.

Technical data

	RSA-0,3
Voltage [V] at 50 Hz	1~ 230
Output power, no more [VA]	60
Maximum load current [A]	0.3
Overall dimensions LxBxH [mm]	162x80x70
Maximum ambient temperature [°C]	+40
Protection	IP30
Weight [kg]	0.65

Speed control provides not only the best ventilation mode for periodically visited premises but considerable reduction of energy consumption.

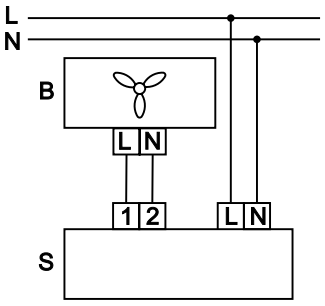

B – fan;
S – speed controller.

Sensor speed switch
SP3-1



Application

- Applied in ventilation systems for turning the fans on/off and speed switch of multi-speed fan motors.

Design and control

- The casing is made of plastic and is equipped with a sensor panel made of hardened glass. The sensor panel has three speed switch buttons. Press a respective speed button to activate a required speed of a connected ventilation unit. Press an activated speed button to turn the ventilation unit off. The activated speed button glows blue.

Mounting

- The speed switch is designed for indoor mounting into special surface mounting box MKN-5 (upon special order) or flush mounting junction box MKV-1 (included).

Technical data

	SP3-1
Voltage [V/50/60 Hz]	110-240
Maximum load current [A]	1
Cable cross section	0.35 up to 1 mm²
Temperature range [°C]	from -10 up to +45
Humidity range	5 % up to 80 % (no condensation)
Service life	100 000 switching operations
Ingress Protection	IP30
Weight [g]	138

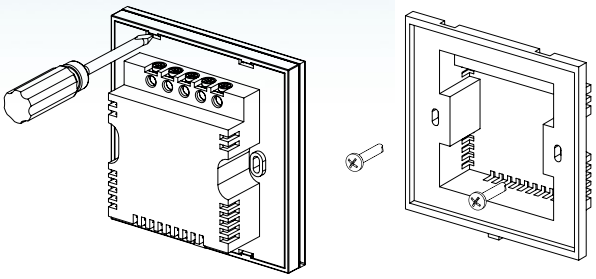

Sensor speed switch mounting

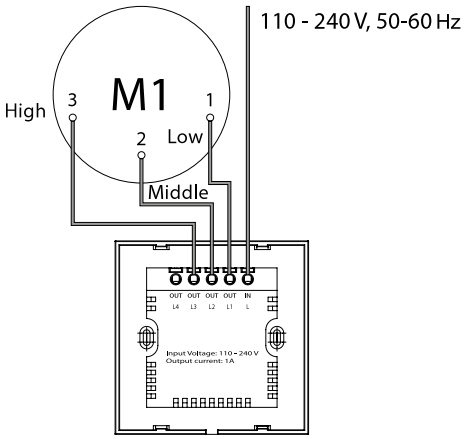

Sensor speed switch mounting

Overall dimensions:

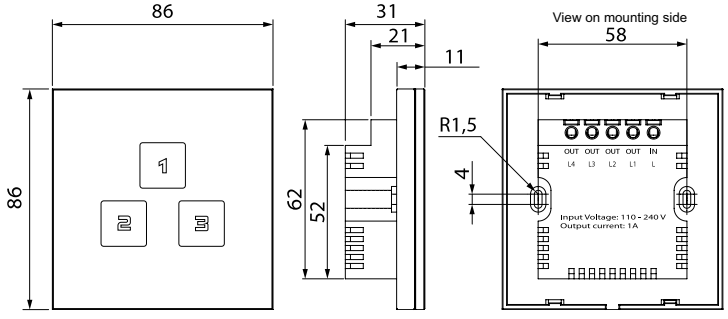

SURFACE MOUNTING JUNCTION BOX



MKN-5

Speed switch
P2-1-300
P3-1-300



Application

- Used for switching the fan on/off and speed selection for the fans with multiple-stage fans.

Design and control

- The switch casing is made of plastic.
- Both direct speed switching (wiring diagram 1 and 3) and fan switching and speed control in parallel with light in the room (wiring diagrams 2 and 4).

Mounting

- The speed switch is designed for indoor installation on the wall inside a flush junction mounting box.
- Suitable for installation inside the round junction boxes.

Technical data

	P2-1-300	P3-1-300
Voltage [V] at 50 Hz	1~ 230	1~ 230
Rated current [A]	3.0	3.0
Number of speeds	2	3
Overall dimensions LxBxH [mm]	88x88x51	88x88x51
Maximum ambient temperature [°C]	40	40
Protection	IP40	IP40
Weight [kg]	0.13	0.13

SWITCH CONNECTION OPTIONS

diagram 1

The fan can be manually switched ON to one of the three required speeds or switched OFF by means of external speed switch as P3-1-300.

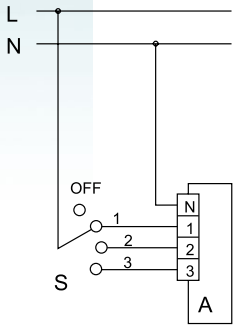

diagram 2

The fan can be manually switched ON to one of three speeds by means of such external S speed switch as P3-1-300. When switching the fan ON the light is switched in parallel ON. The fan can be switched OFF with parallel switching the light OFF. The fan operates both with light or without it.

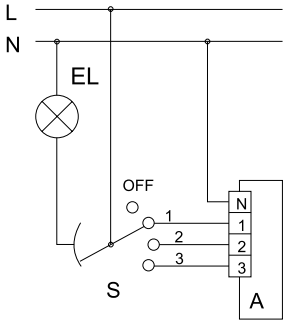

diagram 3

The fan can be manually switched ON to one of the two required speeds or switched OFF by means of the external speed switch as P2-1-300.

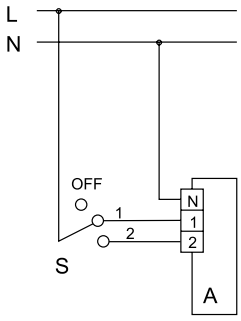

diagram 4

The fan can be manually switched ON to one of three speeds by means of the external S speed switch as P2-1-300. When switching the fan ON the light is switched in parallel ON. The fan can be switched OFF with parallel switching the light OFF. The fan operates both with light or without it.

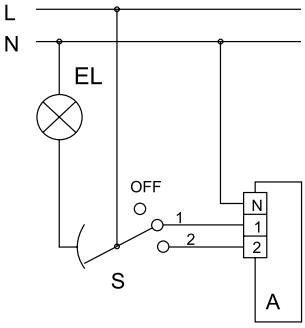

FLUSH MOUNTING JUNCTION BOX



MKV-2

Speed switch
P2-5,0 N(V)
P3-5,0 N(V)
P5-5,0 N(V)



Application

- Used for switching the fan on/off and speed selection for the fans with multiple-stage fans.

Design and control

- The switch casing is made of plastic and equipped with on/off button and operation light indicator.
- Speed switch is used either for local speed switch by rotating a control knob or can be used as a remote wire control panel connected with multi-speed transformer speed controllers. P5-5,0 speed switch can be connected to transformer speed controller.

Mounting

- The speed switch is designed for indoor installation.
- The casing design allows mounting on the wall (N modification) or inside the wall (V modification).

Technical data

	P2-5,0	P3-5,0	P5-5,0
Voltage [V] at 50 Hz	1~ 230	1~ 230	1~ 230
Rated current [A]	5.0	5.0	5.0
Number of speeds	2	3	5
Overall dimensions LxBxH [mm]	162x80x70	162x80x70	162x80x70
Maximum ambient temperature [°C]	40	40	40
Protection	IP30	IP30	IP30
Weight [kg]	0.25	0.25	0.25

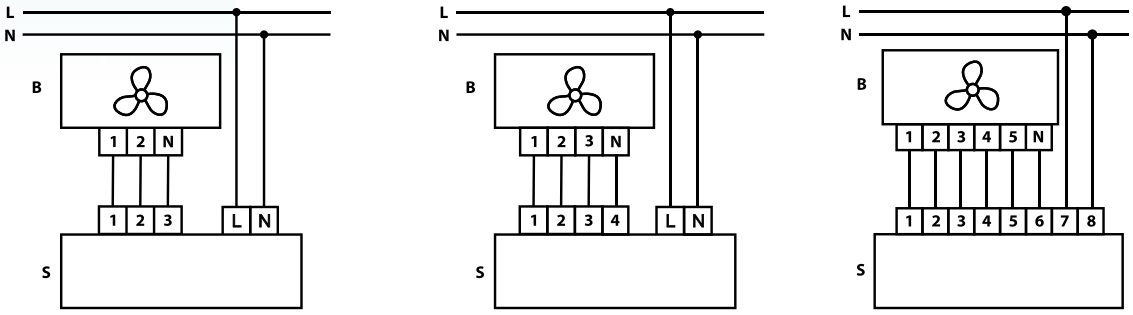

B – fan
S – switch

Speed switch connections

Temperature regulator **RT-10**



Application

- Used for temperature control in the room and control of ventilation, heating and conditioning systems.

Design and control

- The casing is made of durable casing.
- As the temperature decreases or increases the thermostat can break or close the contacts. The operation mode is selected while connection.
- Temperature range from +10 °C to +30 °C.

Mounting

- Thermostat is designed for indoor wall mounting.
- The recommended installation height is 1.5 m from the floor.
- Do not install the thermostat close to windows, doors and heating equipment.

Technical data

	RT-10
Voltage 50/60 Hz [V]	1~ 220-240
Overall dimensions LxBxH [mm]	84x84x35
Maximum ambient temperature [°C]	40
Protection	IP40

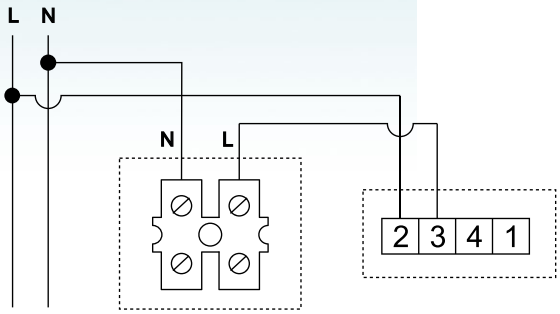

Fan operates until it reaches the pre-set temperature threshold

fig. 1

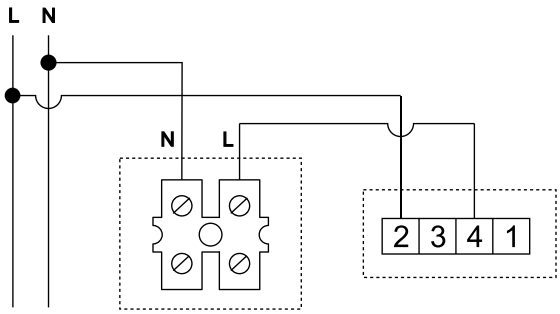

Fan starts operation as the temperature reaches the threshold value set by the thermostat.

fig. 2

Regulator connections

For wiring diagram fig. 1

– maximum active load current no more 10A

– maximum inductive load current no more 3A

For wiring diagram fig. 2

– maximum active load current no more 6 A

– maximum inductive load current no more 2 A

Temperature controller
RTS-1-400
RTSD-1-400



Application

- Temperature control in ventilation, heating and air conditioning systems.
- Compatible with fans and fan coil valves, air heating units equipped with three-speed 230 V fans.
- Automatic control of heating/cooling capacity.

Design and control

- Plastic casing with a built-in temperature sensor.
- The front panel incorporates an integrated LCD display and control buttons.
- The display shows current and set indoor air temperature, set speed and a selected operation mode. The temperature controller may be set for cooling, heating or auto mode.
- The fan speed is set manually by pressing the control buttons.
- Automatic control of low/medium/high speed, depending on indoor air temperature.
- Due to illuminated LCD display the temperature controller is suitable for use in bad light conditions.
- Temperature control accuracy up to 1 °C.
- Saving of user setting saving in case of power outage.
- RTSD-1-400 is available with a remote control.
- Night operation mode. For details, refer to the night operation mode diagram.

Mounting

- The temperature controller is designed for indoor wall flush mounting.
- The recommended installation height is 1.5 m above the floor level.
- The installation place must not be close to windows, doors and heating or cooling equipment.
- Wall flush mounting in the junction box MKV-1 (available upon separate order).

Technical data

	RTS-1-400	RTSD-1-400
Voltage [V] at 50 Hz	1~ 230	1~ 230
Rated current [A]	2.0	2.0
Number of speeds	3	3
Temperature range °C	+10…+30	+10…+30
Overall dimensions LxBxH [mm]	88x88x51	88x88x51
Maximum ambient temperature [°C]	40	40
Protection	IP40	IP40
Remote control	no	yes

Night mode operation

- **Operation in heating mode:** 30 minutes after activation of the night mode the indoor air temperature drops by 1 °C and by one more 1 °C in the next hour. In the next hour the air temperature drops by 1 °C more and remains constant for the next 5 hours. After turning the timer off the air temperature reaches the initial value.
- **Operation in cooling mode:** 30 minutes after activation of the night mode the indoor air temperature increases by 1 °C and by one more 1 °C in the next hour and remains constant for the next 6 hours. After turning the timer off the air temperature drops down to the initial value.

Temperature controller wiring options

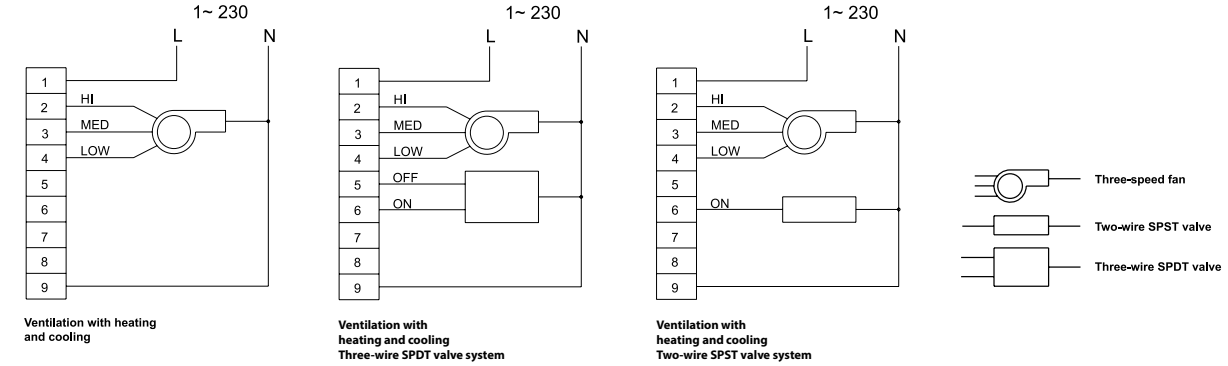

Ventilation with heating and cooling

Ventilation with heating and cooling Three-wire SPDT valve system

Ventilation with heating and cooling Two-wire SPST valve system

Operation in night mode

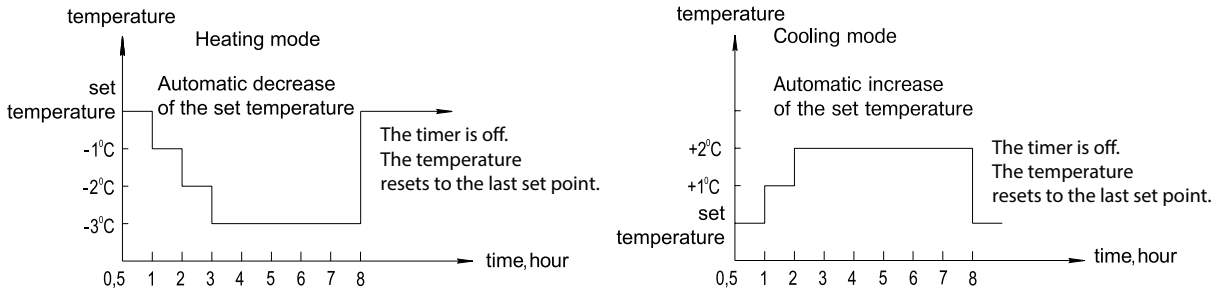

JUNCTION BOX FOR WALL FLUSH MOUNTING



MKV-1

Insulating transformer
TRF-220/12-25



Application

- Low-voltage step-down transformers are used in humid premises as bathroom and kitchen with low-voltage (12 V) safety requirements. TRF transformers are used to provide safe power voltage 12 V/ 50 Hz for the domestic fans not more than 16 W (25VA) with current load up to 2 A.

Design

- Transformer for flush mounting. The transformer casing is made of plastic and supplied with a protective terminal box. Electrical connection of the fan with the safe voltage 12 V is done through the output terminal block.
- For overload protection the transformer is equipped with a replaceable melting fuse built in the input terminal board.
- Protection rating (except terminal blocks) IP40.

Mounting

- Transformer is designed for indoor installation in areas not subjected to high humidity and temperature influence.
- Transformer is designed for ceiling flush mounting or recess wall mounting. In case of installation into a junction box provide sufficient air ventilation to prevent the device overheating.
- Observe the applicable fire safety requirements while installation and operation. Do not install transformers above heating equipment.

Technical data

	TRF-220/12-25
Voltage [V] at 50 Hz	1~ 230
Output voltage [V] / 50 Hz	12
Max. load power, no more	16 (25 VA)
Maximum load current [A]	2.0
Overall dimensions LxBxH [mm]	Transformer 91x58x62 Terminal box 110x40x40
Maximum ambient temperature [°C]	+40
Protection	IP40
Weight [kg]	0.8

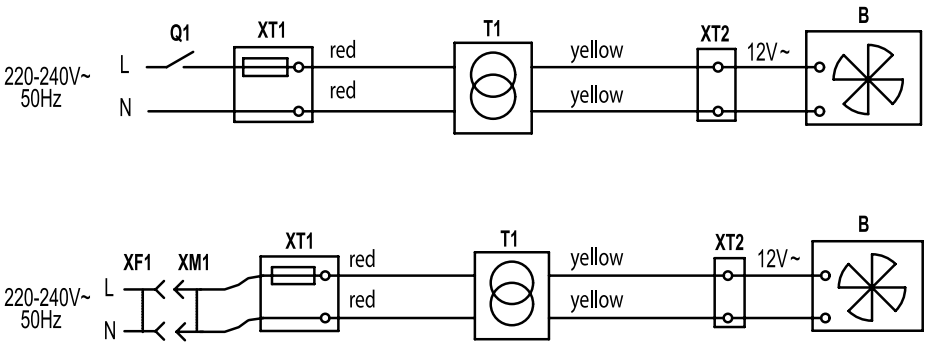

Transformer wiring diagrams

Q1 – external switch integrated into fixed wiring system;
XT1 – input terminal block with built-in fuse in the protecting terminal box;
XF1 – socket integrated into fixed wiring system;
XM1 – standard wall plug;
T1 – transformer;
XT2 – output terminal block for connection of 12 V fan.
B – low voltage fan, 12 V.

Insulating transformer
TRF-220/12-25 K
TRF-220/12-25 KV



Application

- Low-voltage step-down transformers are used in humid premises as bathroom and kitchen with low-voltage (12 V) safety requirements. TRF transformers are used to provide safe power voltage 12 V/ 50 Hz for the domestic fans not more than 16 W (25VA) with current load up to 2 A.

Design

- TRF-220/12-25 K transformer in plastic casing for wall mounting.
- TRF-220/12-25 KV transformer in plastic casing for wall mounting with a built-in switch. The casing is equipped with a light indicator.
- For overload protection the transformer is equipped with a replaceable melting fuse.

Modifications and options

KV – equipped with a pull cord switch.

KT – equipped with a regulated timer with the operating time from 2 to 30 minutes.

KTH – equipped with a timer with the operating time from 2 to 30 minutes and a humidity sensor with the threshold value from 60 to 90 %.

KTP – equipped with a regulated timer and a motion sensor with the sensitivity area from 1 to 4 m and the detection angle up to 100°.

Mounting

- Transformer is designed for indoor installation in areas not subjected to high humidity and temperature influence.
- Transformer is designed for wall mounting. Provide sufficient air circulation for cooling of the internal circuits.
- Observe the applicable fire safety requirements while installation and operation. Do not install transformers above heating equipment.

Technical data

	TRF-220/12-25 K
Voltage [V] at 50 Hz	1~ 230
Output voltage [V] / 50 Hz	12
Max. load power, no more	16 (25VA)
Maximum load current [A]	2.0
Overall dimensions LxBxH [mm]	80x162x63
Maximum ambient temperature [°C]	+40
Protection	IP30
Weight [kg]	0.85

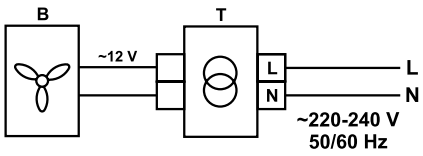

TRF-220/12-25 K

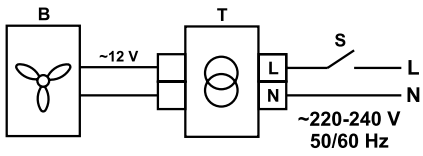

TRF-220/12-25 KV

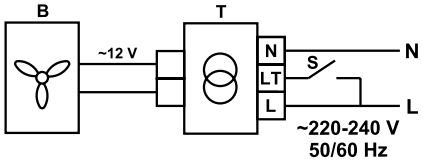

TRF-220/12-25 KT / KTH

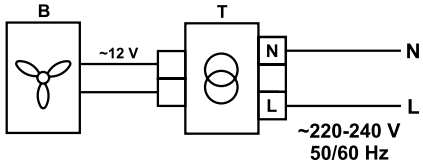

TRF-220/12-25 KTP

Transformer wiring diagrams

B – low voltage fan, 12 V;
T – protective transformer;
S – external switch.

AIR DISTRIBUTION UNITS



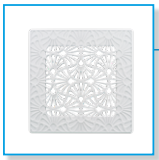

SUPPLY AND EXHAUST GRILLES
Art-Deco Flora Series
page 190



SUPPLY AND EXHAUST GRILLES
MV 100 Series
page 192



SUPPLY AND EXHAUST GRILLES
MV 101, MV 101 Series
page 194



SUPPLY AND EXHAUST GRILLES
MV 120 Series
page 198



SUPPLY AND EXHAUST GRILLES
MV 121, MV 123 Series
page 200



SUPPLY AND EXHAUST GRILLES
MV 125, MV 125-1 Series
page 204



SUPPLY AND EXHAUST GRILLES
MV 126, MV 126-1 Series
page 206



SUPPLY AND EXHAUST GRILLES
MV 127, MV 128 Series
page 208



SUPPLY AND EXHAUST GRILLES
MV 130, MV 131 Series
page 210



SUPPLY AND EXHAUST GRILLES
MV 150 V Series
page 214



SUPPLY AND EXHAUST GRILLES
MV 151 V Series
page 215



SUPPLY AND EXHAUST GRILLES
MV 150, MV 150-1 Series
page 216



SUPPLY AND EXHAUST GRILLES
MV 160 Series
page 218



SUPPLY AND EXHAUST GRILLES
MV 170 Series
page 219



SUPPLY AND EXHAUST GRILLES
MV 180, MV 181 Series
page 220



SUPPLY AND EXHAUST GRILLES
MV 250, MV 250-1 Series
page 224



SUPPLY AND EXHAUST GRILLES
MV 80-1 Series
page 227



SUPPLY AND EXHAUST GRILLES
Single-element MV Series (from MV 150x150 to MV 350x350)
page 228



SUPPLY AND EXHAUST ROUND GRILLES
MV 50 bV, MV 51 bV
page 229



SUPPLY AND EXHAUST ROUND GRILLES
MV 52 bV Series
page 230



SUPPLY AND EXHAUST ROUND GRILLES
MV 80 bV, MV 81 bV Series
page 231



SUPPLY AND EXHAUST ROUND GRILLES
MV 100 bV, MV 125 bV, MV 150 bV Series
page 232



OUTER VENTILATION HOOD
MVVM 162 Series
page 233



SUPPLY AND EXHAUST HOODS
MV 80 bF, MV 100 bF, MV120 bF, MV150 bF Series
page 234



SUPPLY AND EXHAUST HOODS
MV 102, MV 122, MV 152 Series
page 236



EXHAUST GRILLES
MV 100 J Series
page 238



EXHAUST GRILLES
MV 120 J, MV 150 VJ Series
page 239



EXHAUST GRILLES
MV 160 J Series
page 240



EXHAUST GRILLES
MV 250 J Series
page 241



EXHAUST GRILLES
MV 100 K, MV 125 K Series
page 242



EXHAUST GRILLES
MV 100 KV, MV 120 KV, MV 125 KV Series
page 243

Art-Deco Flora
Series



Application

- Decoration of supply and exhaust vents of public, residential and industrial ventilation systems.
- Used for correct air flow distribution in premises.
- Wall or ceiling mounting.

Design

- Made of high quality and durable ABS-plastic.
- Fastening with magnets.

Colour modifications



Art-Deco Flora 200x200
white



Art-Deco Flora 200x200
gray shine



Art-Deco Flora 200x200
black shine



Art-Deco Flora 200x200
ivory shine

Overall dimensions

Model	Dimensions [mm]			
	□ H	□ H1	□ H2	L
Art-Deco Flora	200	155	175	10

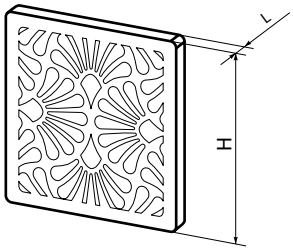

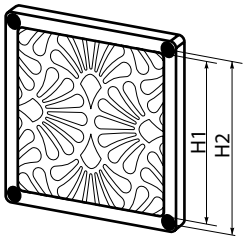

Mounting example





MV 100
Series



Application

- Decoration of supply and exhaust vents of public, residential and industrial ventilation systems.
- Used for correct air flow distribution in premises.
- Wall or ceiling mounting.

Design

- Made of quality and durable plastic.
- Multi-element structure. The internal part is fixed to the base with latches for easy cleaning without dismantling.
- Screw fixing.
- The grille has slanted vanes.

Colour modifications

white | brown | grey | beige | mahogany | lightwood | black

Modifications

MV 100 – basic modification



- Wall or ceiling mounting.
- **MV 100 s** – model with a protecting insect screen.



MV 100 R – model with air flow regulator **(R)**



- Equipped with a movable flap for air flow regulation.
- Air pass is regulated with a tilt wand or pull cords.
- **MV 100 Rs** – model with air flow regulator and a protecting insect screen.



MV 100 V – model with a round flange **(V)**



- Fitted with a round connecting flange for mounting with Ø 100 mm air duct.
- Suitable for direct mounting with VENTS VKO 100 fan.
- **MV 100 Vs** – model with a round flange and a protecting insect screen.



MV 100 VR – model with a round flange and air flow regulator **(VR)**



- Fitted with a round connecting flange for mounting with Ø100 mm air duct.
- Equipped with a movable flap for air flow regulation.
- Air pass is regulated with a tilt wand or pull cords.
- Suitable for direct mounting with VENTS VKO 100 fan.
- **MV 100 VRs** – model with a round flange, air flow regulator and a protecting insect screen.



MV 100 VU – model with a multi-section flange **(VU)**



- Equipped with a multi-section connecting flange for mounting with Ø100, 125 mm or 55x110 mm air duct.
- **MV 100 VUs** – model with a multi-section flange and a protecting insect screen.



MV 100 VUR – model with a multi-section flange and air flow regulator **(VUR)**



- Equipped with a multi-section connecting flange for mounting with Ø100, 125 mm or 55x110 mm air duct.
- Equipped with a movable flap for air flow regulation.
- Air pass is regulated with a tilt wand or pull cords.
- **MV 100 VURs** – model with a multi-section flange, air flow regulator and a protecting insect screen.



Overall dimensions

Model	Dimensions [mm]					Free air, [m²]	Fig. no.
	□B	□H	L	L1	Flange (D)		
MV 100	154	110	15	–	–	0.0067	1, 2
MV 100 R	154	110	15	–	–	0.0049	1, 2
MV 100 V	154	110	15	45	100	0.004	1, 3
MV 100 VR	154	110	15	45	100	0.0037	1, 3
MV 100 VU	154	110	15	39	100, 125, 55x110	0.0067	1, 4
MV 100 VUR	154	110	15	39	100, 125, 55x110	0.0049	1, 4

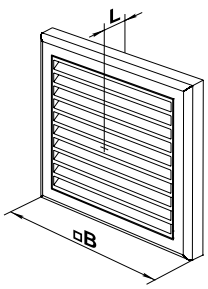

Fig. 1

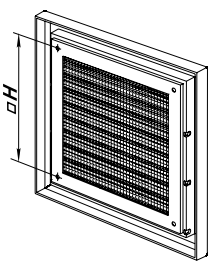

Fig. 2

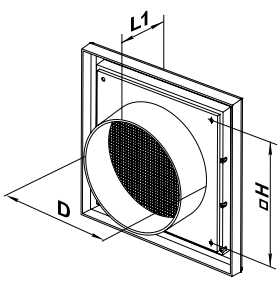

Fig. 3

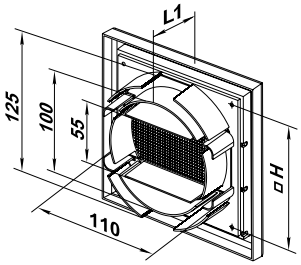

Fig. 4

MV 101
Series



Application

- Decoration of supply and exhaust vents of public, residential and industrial ventilation systems.
- Used for correct air flow distribution in premises.
- Wall or ceiling mounting.

Design

- Made of quality and durable plastic.
- Multi-element structure. The internal part is fixed to the base with latches for easy cleaning without dismantling.
- Screw fixing.
- The grille has straight vanes to increase air pass.

Colour modifications



Modifications

MV 101 – basic modification



- Wall or ceiling mounting
- **MV 101 s** – model with a protecting insect screen.

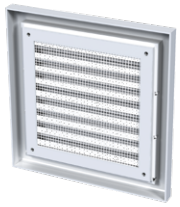

MV 101 R – model with an air flow regulator **(R)**



- Equipped with a movable flap for air flow regulation.
- Air pass is regulated with a tilt wand or pull cords.
- **MV 101 Rs** – model with air flow regulator and a protecting insect screen.



MV 101 V – model with a round flange **(V)**



- Fitted with a round connecting flange for mounting with Ø 100 mm air duct.
- Suitable for direct mounting with VENTS VKO 100 fan.
- **MV 101 Vs** – model with a round flange and a protecting insect screen.



MV 101 VR – model with a round flange and air flow regulator **(VR)**



- Fitted with a round connecting flange for mounting with Ø100 mm air duct.
- Equipped with a movable flap for air flow regulation.
- Air pass is regulated with a tilt wand or pull cords.
- Suitable for direct mounting with VENTS VKO 100 fan.
- **MV 101 VRs** – model with a round flange, air flow regulator and a protecting insect screen.



MV 101 VU – model with a multi-section flange **(VU)**



- Equipped with a multi-section connecting flange for mounting with Ø 100, 125 mm or 55x110 mm air duct.
- **MV 101 VUs** – model with a multi-section flange and a protecting insect screen.



MV 101 VUR – model with a multi-section flange and air flow regulator **(VUR)**



- Equipped with a multi-section connecting flange for mounting with Ø 100, 125 mm or 55x110 mm air duct.
- Equipped with a movable flap for air flow regulation.
- Air pass is regulated with a tilt wand or pull cords.
- **MV 101 VURs** – model with a multi-section flange, air flow regulator and a protecting insect screen.



Overall dimensions

Model	Dimensions [mm]					Free air, [m²]	Fig. no.
	□B	□H	L	L1	Flange (D)		
MV 101	154	110	19	–	–	0.0089	1, 2
MV 101 R	154	110	19	–	–	0.005	1, 2
MV 101 V	154	110	19	49	100	0.0079	1, 3
MV 101 VR	154	110	19	49	100	0.0044	1, 3
MV 101 VU	154	110	19	43	100, 125, 55x110	0.0089	1, 4
MV 101 VUR	154	110	19	43	100, 125, 55x110	0.005	1, 4

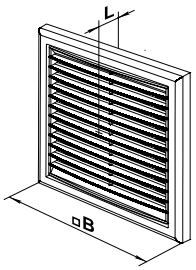

Fig. 1

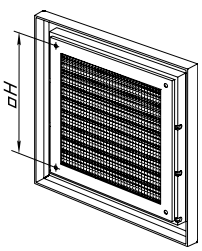

Fig. 2

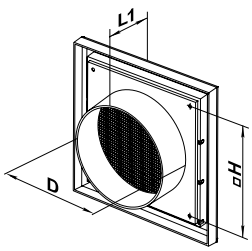

Fig. 3

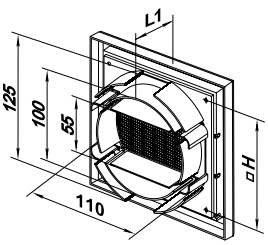

Fig. 4

MV 103
Series



Application

- Decoration of supply and exhaust vents of public, residential and industrial ventilation systems.
- Used for correct air flow distribution in premises.
- Wall or ceiling mounting.

Design

- Made of quality and durable plastic.
- Multi-element structure. The internal part is fixed to the base with latches for easy cleaning without dismantling.
- Fixing with screws.

Colour modifications

white | brown | grey | beige | mahogany | lightwood | black

Modifications

Basic model: **MV 103**



- Wall or ceiling mounting grille.
- **MV 103 s**: model with a protective insect grille.



Model with an air flow regulator (**R**): **MV 103 R**



- Equipped with a movable flap for air flow regulation.
- Cross-sectional regulation with a tilt wand or pull cords.
- **MV 100 Rs**: model with an air flow regulator and a protecting insect screen.



Model with gravity louvre shutters (**J**): **MV 103 J**



- Exhaust grille for wall mounting.
- Equipped with gravity louvre shutters for back flow preventing.



Model with a round flange (**V**): **MV 103 V**

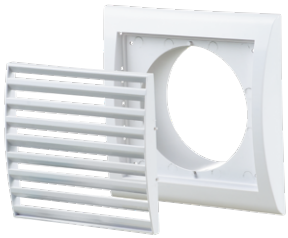

- Fitted with a round connecting flange for mounting with ∅ 100 mm air duct.
- Suitable for direct mounting with VENTS VKO 100 fan.
- **MV 100 Vs**: model with a round flange and a protecting insect screen.



Model with a round flange and gravity louvre shutters (**VJ**): **MV 103 VJ**



- Exhaust grille for wall mounting.
- Equipped with gravity louvre shutters.
- Fitted with a round connecting flange for mounting with ∅ 100 mm air duct.



Model with a round flange and air flow regulator (**VR**): **MV 103 VR**



- Fitted with a round connecting flange for mounting with ∅ 100 mm air duct.
- Equipped with a movable flap for air flow regulation.
- Cross-sectional regulation with a tilt wand or pull cords.
- Suitable for direct mounting with VENTS VKO 100 fan.
- **MV 103 VRs**: model with a round flange, an air flow regulator and a protecting insect screen.



Overall dimensions

Model	Dimensions, [mm]							Cross-sectional area, [m²]	Fig. no.
	B	H	B1	H1	L	L1	D		
MV 103	156	151	110	95	18	-	-	0.0051	1, 2
MV 103 R	156	151	110	95	18	-	-	0.0048	1, 2
MV 103 V	156	151	110	95	18	35	100	0.0051	1, 3
MV 103 VR	156	151	110	95	18	35	100	0.0036	1, 3
MV 103 J	156	151	110	95	18	-	-	0.0093	1, 2
MV 103 VJ	156	151	110	95	18	53	100	0.0073	1, 3

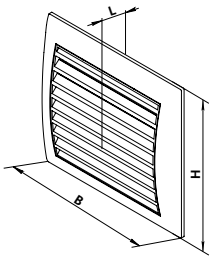

Fig. 1

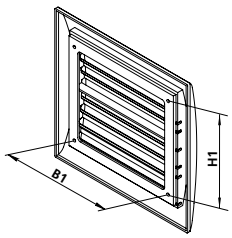

Fig. 2

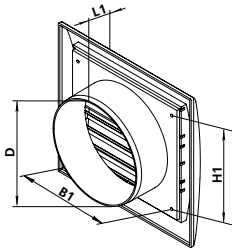

Fig. 3

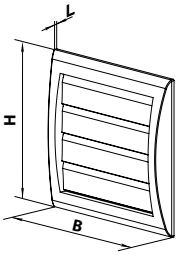

Fig. 1

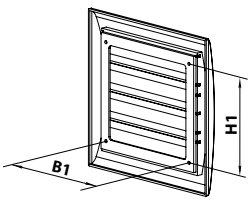

Fig. 2

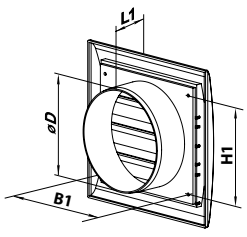

Fig. 3

MV 120
Series



Application

- Decoration of supply and exhaust vents of public, residential and industrial ventilation systems.
- Used for correct air flow distribution in premises.
- Wall or ceiling mounting.

Design

- Made of quality and durable plastic.
- Multi-element structure. The internal part is fixed to the base with latches for easy cleaning without dismantling.
- Screw fixing.
- The grille has slanted vanes.

Colour modifications

white | brown | grey | beige | mahogany | lightwood | black

Modifications

MV 120 – basic modification



- Wall or ceiling mounting.
- **MV 120 s** – model with a protecting insect screen.



MV 120 R – model with an air flow regulator **(R)**



- Equipped with a movable flap for air flow regulation.
- Air pass is regulated with a tilt wand or pull cords.
- **MV 120 Rs** – model with air flow regulator and a protecting insect screen.



MV 120 V – model with a round flange **(V)**



- Fitted with a round connecting flange for mounting with Ø 125 mm air duct.
- Suitable for direct mounting with VENTS VKO 125 fan.
- **MV 120 Vs** – model with a round flange and a protecting insect screen.

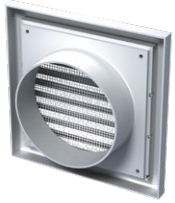

MV 120 VR – model with a round flange and air flow regulator **(VR)**



- Fitted with a round connecting flange for mounting with Ø 125 mm air duct.
- Equipped with a movable flap for air flow regulation.
- Air pass is regulated with a tilt wand or pull cords.
- Suitable for direct mounting with VENTS VKO 125 fan.
- **MV 120 VRs** – model with a round flange, air flow regulator and a protecting insect screen.



MV 120 VN – model with a flange with various diameters **(VN)**



- Fitted with a round connecting flange for mounting with Ø 100/110/120/130/150 mm air duct.
- MV 120 VNs – model with a round flange with various diameters and a protecting insect screen.



MV 120 VNR – model with a flange with various diameters and air flow regulator **(VNR)**



- Fitted with a round connecting flange for mounting with Ø 100/110/120/130/150 mm air duct.
- Equipped with a movable flap for air flow regulation.
- Air pass is regulated with a tilt wand or pull cords.
- MV 120 VNRs – model with a round variable diameter flange, air flow regulator and a protecting insect screen.



Overall dimensions

Model	Dimensions [mm]					Free air, [m²]	Fig. no.
	□B	□H	L	L1	D		
MV 120	186	142	15	–	–	0.0115	1, 2
MV 120 R	186	142	15	–	–	0.0062	1, 2
MV 120 V	186	142	15	45	125	0.0083	1, 3
MV 120 VR	186	142	15	45	125	0.0044	1, 3
MV 120 VN	186	142	15	115	100-150	0.009	1, 4
MV 120 VNR	186	142	15	115	100-150	0.0051	1, 4

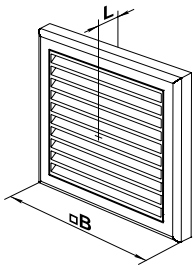

Fig. 1

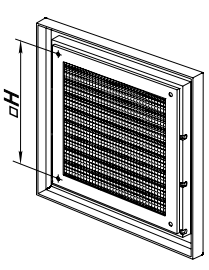

Fig. 2

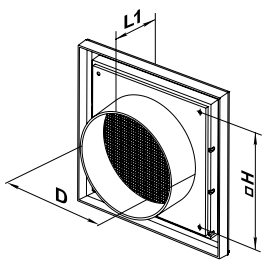

Fig. 3

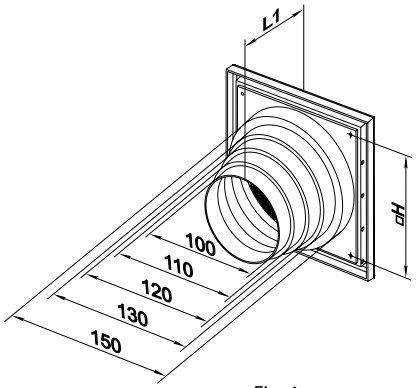

Fig. 4

MV 121
Series



Application

- Decoration of supply and exhaust vents of public, residential and industrial ventilation systems.
- Used for correct air flow distribution in premises.
- Wall or ceiling mounting.

Design

- Made of quality and durable plastic.
- Multi-element structure. The internal part is fixed to the base with latches for easy cleaning without dismantling.
- Screw fixing.
- The grille has straight vanes to increase air pass.

Colour modifications

white | brown | grey | beige | mahogany | lightwood | black

Modifications

MV 121 – basic modification



- Wall or ceiling mounting.
- **MV 121 s** – model with a protecting insect screen.



MV 121 R – model with an air flow regulator **(R)**



- Equipped with a movable flap for air flow regulation.
- Air pass is regulated with a tilt wand or pull cords.
- **MV 121 Rs** – model with air flow regulator and a protecting insect screen.



MV 121 V – model with a round flange **(V)**



- Fitted with a round connecting flange for mounting with Ø 125 mm air duct.
- Suitable for direct mounting with VENTS VKO 125 fan.
- **MV 121 Vs** – model with a round flange and a protecting insect screen.



MV 121 VR – model with a round flange and air flow regulator **(VR)**



- Fitted with a round connecting flange for mounting with Ø 125 mm air duct.
- Equipped with a movable flap for air flow regulation.
- Air pass is regulated with a tilt wand or pull cords.
- Suitable for direct mounting with VENTS VKO 125 fan.
- **MV 121 VRs** – model with a round flange, air flow regulator and a protecting insect screen.



MV 121 VN – model with a flange with various diameters **(VN)**



- Fitted with a round connecting flange with various diameters for mounting with Ø 100/110/120/130/150 mm air duct.
- **MV 121 VNs** – model with a round flange with various diameters and a protecting insect screen.



MV 121 VNR – model with a flange with various diameters and air flow regulator **(VNR)**



- Fitted with a round connecting flange with various diameters for mounting with Ø 100/110/120/130/150 mm air duct.
- Equipped with a movable flap for air flow regulation.
- Air pass is regulated with a tilt wand or pull cords.
- **MV 121 VNRs** – model with a round flange with various diameters, air flow regulator and a protecting insect screen.



Overall dimensions

Model	Dimensions [mm]					Free air, [m²]	Fig. no.
	□B	□H	L	L1	D		
MV 121	186	142	19	–	–	0.0155	1, 2
MV 121 R	186	142	19	–	–	0.0083	1, 2
MV 121 V	186	142	19	49	125	0.0123	1, 3
MV 121 VR	186	142	19	49	125	0.0066	1, 3
MV 121 VN	186	142	19	119	100-150	0.0123	1, 4
MV 121 VNR	186	142	19	119	100-150	0.0066	1, 4

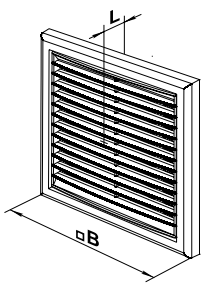

Fig. 1

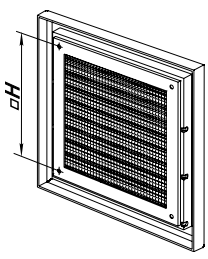

Fig. 2

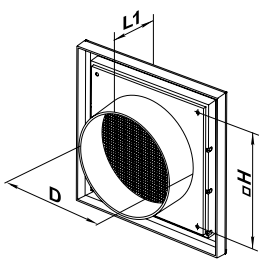

Fig. 3

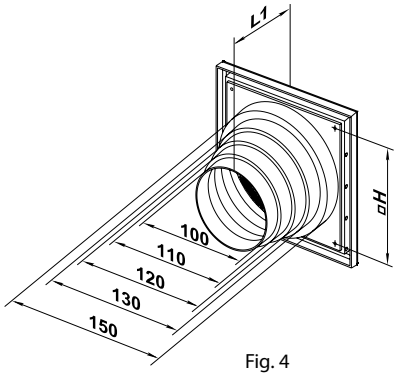

Fig. 4

MV 123
Series



Application

- Decoration of supply and exhaust vents of public, residential and industrial ventilation systems.
- Used for correct air flow distribution in premises.
- Wall or ceiling mounting.

Design

- Made of quality and durable plastic.
- Multi-element structure. The internal part is fixed to the base with latches for easy cleaning without dismantling.
- Fixing with screws.

Colour modifications



Modifications

Basic model: **MV 123**



- Wall or ceiling mounting grille.
- **MV 123 s**: model with a protecting insect screen.



Model with an air flow regulator (**R**): **MV 123 R**



- Equipped with a movable flap for air flow regulation.
- Cross-sectional regulation with a tilt wand or pull cords.
- **MV 123 Rs**: model with an air flow regulator and a protecting insect screen.



Model with gravity louvre shutters (**J**): **MV 123 J**



- Exhaust grille for wall mounting.
- Equipped with gravity louvre shutters for back flow preventing.



Model with a round flange and gravity louvre shutters (**VJ**): **MV 123/125 VJ, MV 123/150 VJ**



- Exhaust grille for wall mounting.
- Equipped with gravity louvre shutters.
- Fitted with a round connecting flange for mounting with Ø 125 mm or Ø 150 mm air duct.



Model with a round flange (**V**): **MV 123/125 V, MV 123/150 V**

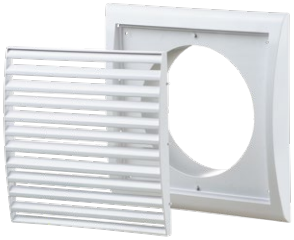

- Fitted with a round connecting flange for mounting with Ø 125 mm air duct **(MV 123/125 V)** or Ø 150 mm air duct **(MV 123/150 V)**.
- Suitable for direct mounting with VENTS VKO 125 fan **(MV 123/125 V)** or with VENTS VKO 150 **(MV 123/150 V)**.
- **MV 123/125 Vs, MV 123/150 Vs**: models with a round flange and a protecting insect screen.



Model with an air flow regulator (**R**): **MV 123/150 VR**



- Fitted with a round connecting flange for mounting with Ø 125 mm air duct (**MV 123/125 VR**) or Ø 150 mm air duct **(MV 123/150 VR)**.
- Equipped with a movable flap for air flow regulation.
- Cross-sectional regulation with a tilt wand or pull cords.
- Suitable for direct mounting with VENTS VKO 125 fan **(MV 123/125 VR)** or with VENTS VKO 150 **(MV 123/150 VR)**.
- **MV 123/125 VRs, MV 123/150 VRs**: grilles with a round flange, an air flow regulator and a protecting insect screen.



Overall dimensions

Model	Dimensions, [mm]							Cross-sectional area, [m²]	Fig. no.
	B	H	B1	H1	L	L1	D		
MV 123	193	188	151	135	18	-	-	0.0097	1, 2
MV 123 R	193	188	151	135	18	35	125	0.0095	1, 3
MV 123/125 V	193	188	151	135	18	35	125	0.0097	1, 3
MV 123/150 V	193	188	151	135	18	35	150	0.0097	1, 3
MV 123/125 VR	193	188	151	135	18	35	125	0.0056	1, 3
MV 123/150 VR	193	188	151	135	18	35	150	0.0084	1, 3
MV 123 J	193	188	151	135	18	-	-	0.016	1, 2
MV 123/125 VJ	193	188	151	135	18	53	125	0.01	1, 3
MV 123/150 VJ	193	188	151	135	18	53	150	0.014	1, 3

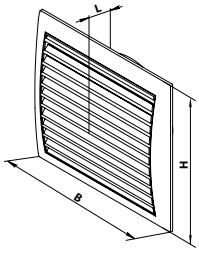

Fig. 1

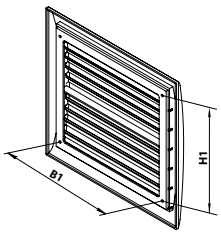

Fig. 2

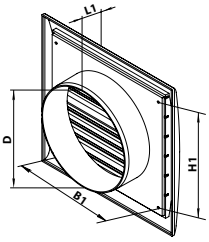

Fig. 3

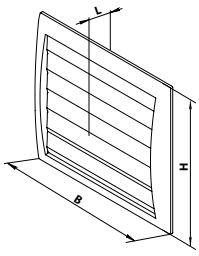

Fig. 1

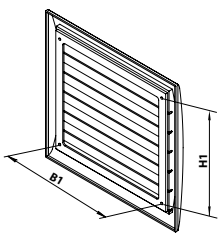

Fig. 2

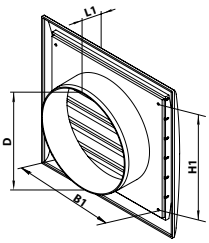

Fig. 3

MV 125
Series



Application

- Decoration of supply and exhaust vents of public, residential and industrial ventilation systems.
- Used for correct air flow distribution in premises.
- Wall or ceiling mounting.

Design

- Made of quality and durable plastic.
- Multi-element structure. The internal part is fixed to the base with latches for easy cleaning without dismantling.
- Fixing with screw or lugs depending on modification.

Colour modifications



Modifications

MV 125 – basic modification



- Screw fixing.
- **MV 125 s** – model with a protecting screen and screw fixing.
- **MV 125 M** – model with fixing lugs.
- **MV 125 Ms** – model with fixing lugs and a protecting insect screen.



MV 125 VD – model with four-element connecting flange (VD)



- Screw fixing.
- Equipped with four-element connecting flange with adjustable diameter for connection to Ø 100-150 mm round air duct.
- **MV 125 VDS** – grille model with screw fixing and a protecting insect screen.
- **MV 125 VDM** – grille model with fixing lugs.
- **MV 125 VDMs** – grille model with fixing lugs and a protecting insect screen.



Overall dimensions

Model	Dimensions [mm]							Free air, [m²]	Fig. no.
	H	B	L	L1	H1	B1	D		
MV 125	251	182	16	–	226	157	–	0.0127	1, 2
MV 125 VD	251	182	16	41	226	157	100-150	0.0127	1, 3

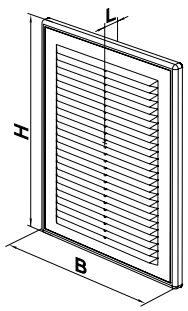

Fig. 1

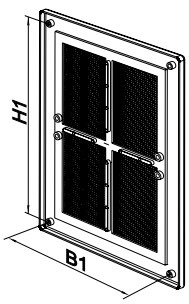

Fig. 2

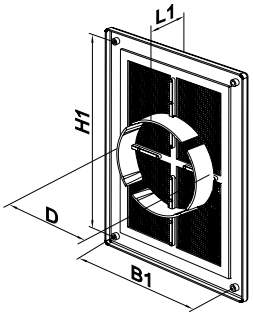

Fig. 3

MV 125-1
Series



Application

- Decoration of supply and exhaust vents of public, residential and industrial ventilation systems.
- Used for correct air flow distribution in premises.
- Wall or ceiling mounting.

Design

- Made of quality and durable plastic.
- Single-element structure. Modification may include a protecting insect screen.
- Fixing with glue or silicon.

Colour modifications



Modifications

MV 125–1 – single-element model



- Wall or ceiling mounting.
- Fixing with glue or silicon.
- **MV 125-1 s** – model with a protecting insect screen.



Overall dimensions

Model	Dimensions [mm]			Air pass, [m²]
	H	B	L	
MV 125-1	238	170	8	0.0127

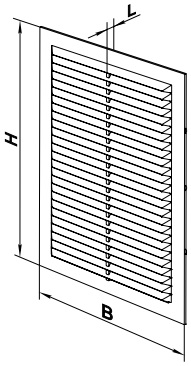

MV 126
Series



Application

- Decoration of supply and exhaust vents of public, residential and industrial ventilation systems.
- Used for correct air flow distribution in premises.
- Wall or ceiling mounting.

Design

- Made of quality and durable plastic.
- Multi-element structure. The internal part is fixed to the base with latches for easy cleaning without dismantling.
- Fixing with screws or lugs depending on grille modification.

Colour modifications

white | brown | grey | beige | mahogany | lightwood | black

Modifications

MV 126 – basic modification



- Screw fixing.
- **MV 126 s** – model with screw fixing and a protecting insect screen.
- **MV 126 M** – model with fixing lugs.
- **MV 126 Ms** – model with fixing lugs and a protecting insect screen.



MV 126 VD – model with four-element connecting flange (VD)



- Screw fixing.
- Equipped with four-element connecting flange with adjustable diameter for connection to Ø 100-150 mm round air duct.
- **MV 126 VDs** – model with screw fixing and a protecting insect screen.
- **MV 126 VDM** – model with fixing lugs.
- **MV 126 VDMs** – model with fixing lugs and a protecting insect screen.



Overall dimensions

Model	Dimensions [mm]							Free air, [m²]	Fig. no.
	H	B	L	L1	H1	B1	D		
MV 126	251	182	19.5	–	226	157	–	0.018	1, 2
MV 126 VD	251	182	19.5	45	226	157	100-150	0.018	1, 3

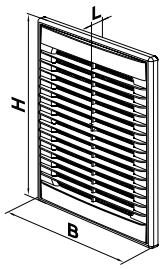

Fig. 1

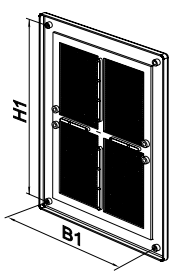

Fig. 2

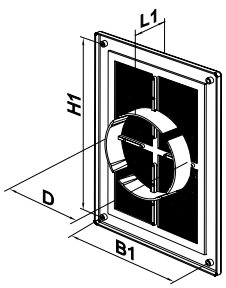

Fig. 3

MV 126-1
Series



Application

- Decoration of supply and exhaust vents of public, residential and industrial ventilation systems.
- Used for correct air flow distribution in premises.
- Wall or ceiling mounting.

Design

- Made of quality and durable plastic.
- Single-element structure. Modification may include a protecting insect screen.
- Fixing with glue or silicon.

Colour modifications



Modifications

MV 126-1 – single-element structure



- Wall or ceiling mounting.
- Fixing with glue or silicon.
- **MV 126-1 s** – model with a protecting insect screen.



Overall dimensions

Model	Dimensions [mm]			Free air, [m²]
	H	B	L	
MV 126-1	238	170	13.5	0.018

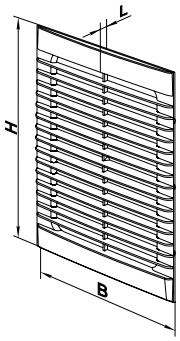

MV 127
Series



Application

- Decoration of supply and exhaust vents of public, residential and industrial ventilation systems.
- Used for correct air flow distribution in premises.
- Wall or ceiling mounting.

Design

- Made of high quality and durable plastic.
- Multi-element structure. The internal part is fixed to the base with latches for easy cleaning without dismantling.
- Screw fixing.

Colour modifications



white | brown | grey | beige | mahogany | lightwood | black

Modifications

MV 127 – basic modification



- Wall or ceiling mounting.
- **MV 127 s** – model with a protecting insect screen.



Overall dimensions

Model	Dimensions, mm					Free air, m²	Fig. no.
	B	H	B1	H1	L		
MV 127	173	248	131	198	18	0,009	1, 2

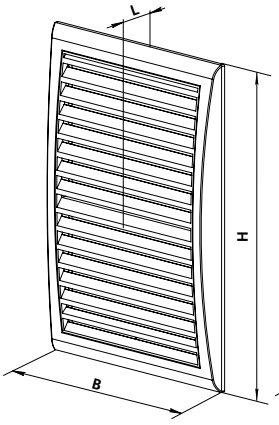

Fig. 1

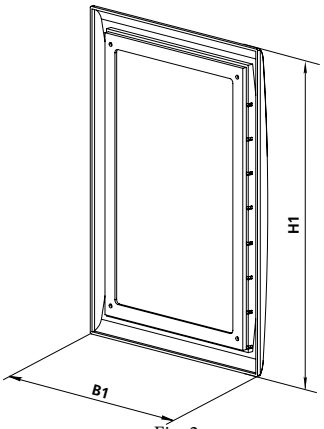

Fig. 2

MV 128
Series



Application

- Decoration of supply and exhaust vents of public, residential and industrial ventilation systems.
- Used for correct air flow distribution in premises.
- Wall or ceiling mounting.

Design

- Made of high quality and durable plastic.
- Multi-element structure. The internal part is fixed to the base with latches for easy cleaning without dismantling.
- Screw fixing.

Colour modifications

white | brown | grey | beige | mahogany | lightwood | black

Modifications

MV 128 – basic modification



- Wall or ceiling mounting.
- **MV 128 s** – model with a protecting insect screen.



Overall dimensions

Model	Dimensions, mm					Free air, m²	Fig. no.
	B	H	B1	H1	L		
MV 128	143	298	101	245	18	0,01	1, 2

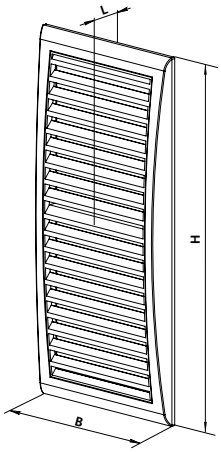

Fig. 1

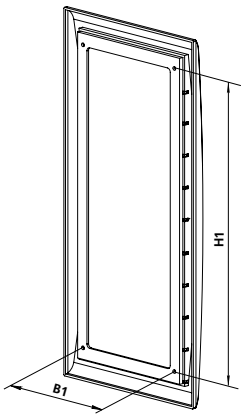

Fig. 2

MV 130
Series



Application

- Decoration of supply and exhaust vents of public, residential and industrial ventilation systems.
- Used for correct air flow distribution in premises.
- Wall or ceiling mounting.

Design

- Made of high-quality and durable plastic.
- Multi-element structure. The internal part is fixed to the base with latches for easy cleaning without dismantling.
- Screw fixing.

Color modifications

white | brown | grey | beige | mahogany | lightwood | black

Modifications

Basic model: **MV 130**



- Grille for wall or ceiling mounting.
- **MV 130 s:** grille with a protecting insect screen



Model with a round flange (V): **MV 130 V**



- Equipped with a round connecting flange for mounting with Ø 100 mm air ducts.
- Suitable for direct mounting with the **Vents VKO 100 fan.**
- **MV 130 Vs:** grille with a round flange and a protective insect screen.



Model with a rectangular flange (F): **MV 130 F**



- Equipped with a rectangular flange 100x100 mm.
- **MV 130 Fs:** grille with a rectangular flange and a protective insect screen.



Model with a rectangular flange and gravity louver shutters **(JF): MV 130 JF**



- Grille for exhaust ventilation.
- Equipped with a rectangular flange 100x100 mm.
- Equipped with gravity louver shutters for preventing back flow.
- **MV 130 Fs:** grille with a rectangular flange, louver shutters and a protective insect screen.



Model with an air flow regulator **(R): MV 130 R**



- Equipped with a movable flap for air flow regulation.
- Cross-sectional regulation with a tilt wand.
- **MV 130 Rs:** grille with an air flow regulator and a protective insect screen.



Model with a rectangular flange and an air flow regulator **(RF): MV 130 RF**



- Equipped with a rectangular flange 100x100 mm.
- Equipped with a movable flap for air flow regulation.
- Cross-sectional regulation with pull cords.
- **MV 130 Rs:** grille with a rectangular flange, an air flow regulator and a protective insect screen.



Overall dimensions

Model	Dimensions [mm]					Free air, [m²]	Fig. no.
	B	H1	L	L1	D		
MV 130	140	118	12,6	-	-	0,0091	1
MV 130 R	140	118	12,6	-	-	0,0091	1, 2
MV 130 V	140	118	12,5	28	100	0,0043	1, 3
MV 130 F	140	118	12,5	28	100x100	0,0053	1, 4
MV 130 RF	140	118	12,5	28	100x100	0,0053	1, 4
MV 130 JF	140	118	12,5	28	100x100	0,0053	1, 5

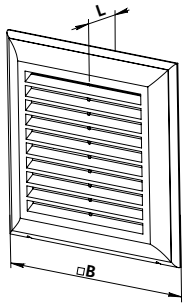

Fig. 1

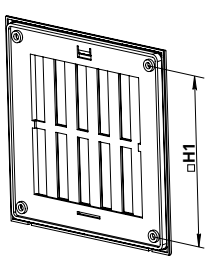

Fig. 2

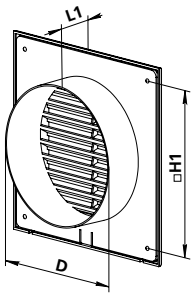

Fig. 3

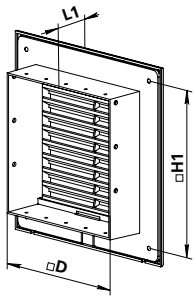

Fig. 4

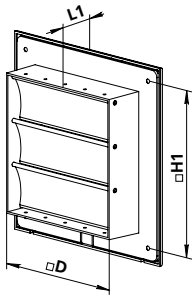

Fig. 5

MV 131
Series



Application

- Decoration of supply and exhaust vents of public, residential and industrial ventilation systems.
- Used for correct air flow distribution in premises.
- Wall or ceiling mounting.

Design

- Made of high-quality and durable plastic.
- Multi-element structure. The internal part is fixed to the base with latches for easy cleaning without dismantling.
- Screw fixing.

Color modifications

white | brown | grey | beige | mahogany | lightwood | black

Modifications

Basic model: **MV 131**



- Grille for wall or ceiling mounting.
- **MV 131 s:** grille with a protecting insect screen



Model with a rectangular flange **(F): MV 131 F**



- Equipped with a rectangular flange 100x255 mm.
- **MV 131 Fs:** grille with a rectangular flange and a protective insect screen.



Model with a rectangular flange and gravity louver shutters **(JF):MV 131 JF**



- Grille for exhaust ventilation
- Equipped with a rectangular flange 100x255 mm.
- Equipped with gravity louver shutters for preventing back flow.
- **MV 131 JFs:** grille with a rectangular flange, louver shutters and a protective insect screen



Model with an air flow regulator **(R):MV 131 R**



- Equipped with a movable flap for air flow regulation.
- Cross-sectional regulation with a tilt wand.
- **MV 131 Rs:** grille with an air flow regulator and a protective insect screen.



Model with a rectangular flange and an air flow regulator **(RF):MV 131 RF**



- Equipped with a rectangular flange 100x255 mm.
- Equipped with a movable flap for air flow regulation.
- Cross-sectional regulation with pull cords.
- **MV 131 RFs:** grille with a rectangular flange, an air flow regulator and a protective insect screen.



Overall dimensions

Model	Dimensions [mm]									Cross-sectional area [m²]	Fig. no.
	B	H	B1	H1	H2	L	L1	D	D1		
MV 131	140	300	125	140	140	12,6	-	-		0,0146	1
MV 131 R	140	300	125	140	140	12,6	-	-		0,0146	1, 2
MV131 F	140	300	125	140	140	12,6	28	100	255	0,0128	1, 3
MV 131 RF	140	300	125	140	140	12,6	28	100	255	0,0128	1, 3
MV 131 JF	140	300	125	140	140	12,6	28	100	255	0,0128	1, 4

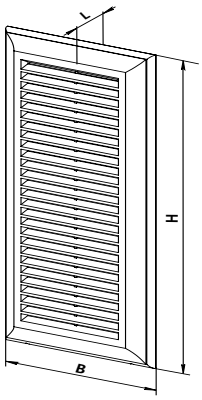

Fig. 1

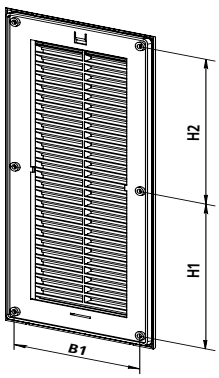

Fig. 2

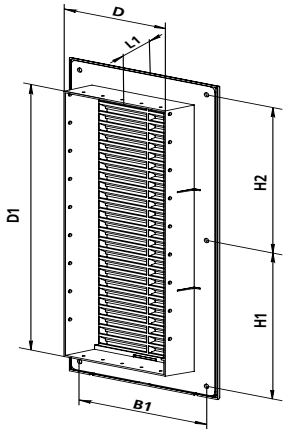

Fig. 3

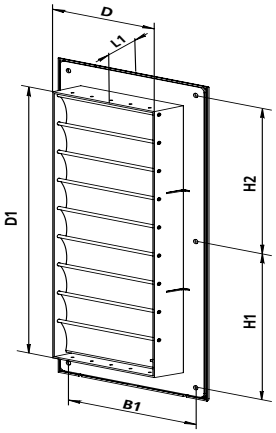

Fig. 4

MV 150 V
Series



Application

- Decoration of supply and exhaust vents of public, residential and industrial ventilation systems.
- Used for correct air flow distribution in premises.
- Wall or ceiling mounting.

Design

- Made of quality and durable plastic.
- Multi-element structure. The internal part is fixed to the base with latches for easy cleaning without dismantling.
- Screw fixing.
- The grille has slanted vanes.

Colour modifications



Modifications

MV 150 V – model with a round flange (V)



- Fitted with a round connecting flange for mounting with Ø 150 mm air duct.
- Suitable for direct mounting with VENTS VKO 150 fan.
- **MV 150 Vs** – model with a round flange and a protecting insect screen.



MV 150 VR – model with a round flange and air flow regulator (VR)



- Fitted with a round connecting flange for mounting with Ø 150 mm air duct.
- Equipped with a movable flap for air flow regulation.
- Air pass is regulated with a tilt wand or pull cords.
- Suitable for direct mounting with VENTS VKO 150 fan.
- **MV 150 VRs** – model with a round flange, air flow regulator and a protecting insect screen.



Overall dimensions

Model	Dimensions [mm]					Free air, [m²]	Fig. no.
	□B	□H	L	L1	D		
MV 150 V	186	142	15	50	150	0.0083	1, 2
MV 150 VR	186	142	15	50	150	0.0044	1, 2

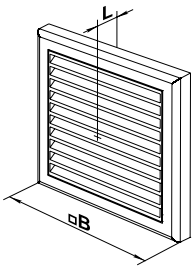

Fig. 1

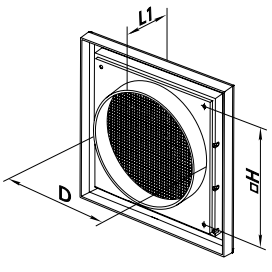

Fig. 2

MV 151 V
Series



Application

- Decoration of supply and exhaust vents of public, residential and industrial ventilation systems.
- Used for correct air flow distribution in premises.
- Wall or ceiling mounting.

Design

- Made of quality and durable plastic.
- Multi-element structure. The internal part is fixed to the base with latches for easy cleaning without dismantling.
- Screw fixing.
- The grille has straight vanes to increase air pass.

Colour modifications



Modifications

MV 151 V – model with a round flange **(V)**



- Fitted with a round connecting flange for mounting with Ø 150 mm air duct.
- Suitable for direct mounting with VENTS VKO 150 fan.
- **MV 151 Vs** – model with a round flange and a protecting insect screen.



MV 151 VR – model with a round flange and air flow regulator **(VR)**



- Fitted with a round connecting flange for mounting with Ø 150 mm air duct.
- Equipped with a movable flap for air flow regulation.
- Air pass is regulated with a tilt wand or pull cords.
- Suitable for direct mounting with VENTS VKO 150 fan.
- **MV 151 VRs** – model with a round flange, air flow regulator and a protecting insect screen.



Overall dimensions

Model	Dimensions [mm]					Free air, [m²]	Fig. no.
	□B	□H	L	L1	D		
MV 151 V	186	142	19	54	150	0.0123	1, 2
MV 151 VR	186	142	19	54	150	0.0066	1, 2

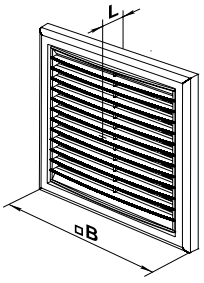

Fig. 1

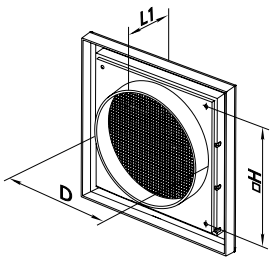

Fig. 2

MV 150
Series



Application

- Decoration of supply and exhaust vents of public, residential and industrial ventilation systems.
- Used for correct air flow distribution in premises.
- Wall or ceiling mounting.

Design

- Made of quality and durable plastic.
- Multi-element structure. The internal part is fixed to the base with latches for easy cleaning without dismantling.
- Fixing with screws or lugs depending on grille modification.

Colour modifications



Modifications

MV 150 – basic modification



- Screw fixing.
- **MV 150 s** – model with a protecting insect screen and screw fixing.
- **MV 150 M** – model with fixing lugs.
- **MV 150 Ms** – model with fixing lugs and a protecting insect screen.



MV 150 VD – model with four-element connecting flange



- Screw fixing.
- Equipped with four-element connecting flange with adjustable diameter for connection to Ø 100-150 mm round air duct.
- **MV 150 VDs** – model with four-element connecting flange, screw fixing and a protecting insect screen.
- **MV 150 VDM** – model with four-element connecting flange and fixing lugs.
- **MV 150 VDMs** – model with four-element connecting flange, fixing lugs and a protecting insect screen.



Overall dimensions

Model	Dimensions [mm]					Free air, [m²]	Fig. no
	B	H	L	L1	D		
MV 150	204	179	16	–	–	0.0092	1, 2
MV 150 VD	204	179	16	41	100-150	0.0092	1, 3

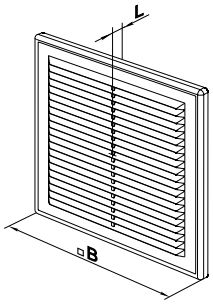

Fig. 1

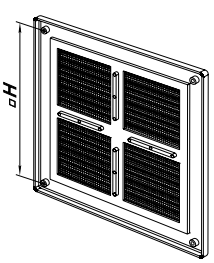

Fig. 2

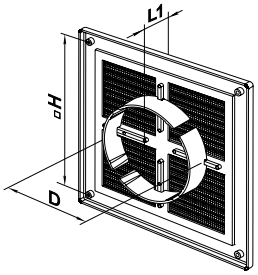

Fig. 3

MV 150-1
Series



Application

- Decoration of supply and exhaust vents of public, residential and industrial ventilation systems.
- Used for correct air flow distribution in premises.
- Wall or ceiling mounting.

Design

- Made of quality and durable plastic.
- Multi-element structure. The internal part is fixed to the base with latches for easy cleaning without dismantling.
- Fixing with glue or silicon.

Colour modifications



white | brown | grey | beige | mahogany | lightwood | black

Modifications

MV 150-1 – single-element model



- Wall or ceiling mounting.
- Fixing with glue or silicon.
- **MV 150-1 s** – model with a protecting insect screen.



Overall dimensions

Model	Dimensions [mm]		Air pass, [m²]
	B	L	
MV 150-1	192	8	0.0092

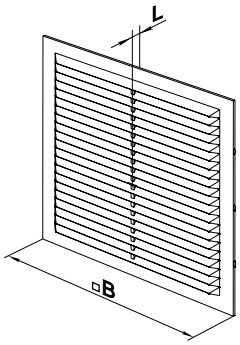

MV 160
Series



Application

- Decoration of supply and exhaust vents of public, residential and industrial ventilation systems.
- Used for correct air flow distribution in premises.
- Wall or ceiling mounting.

Design

- Made of quality and durable plastic.
- Multi-element structure. The internal part is fixed to the base with latches for easy cleaning without dismantling.
- Fixing with screws or lugs depending on grille modification.

Colour modifications

white | brown | grey | beige | mahogany | lightwood | black

Modifications

MV 160 – basic modification



- Screw fixing.
- **MV 160 s** – model with a protecting insect screen and screw fixing.
- **MV 160 M** – model with fixing lugs.
- **MV 160 Ms** – model with fixing lugs and a protecting insect screen.



MV 160 VD – model with four-element connecting flange **(VD)**



- Screw fixing.
- Equipped with four-element connecting flange with adjustable diameter for connection to Ø 100-150 mm round air duct.
- **MV 160 VDs** – model with four-element connecting flange and a protecting insect screen.
- **MV 160 VDM** – model with four-element connecting flange and fixing lugs.
- **MV 160 VDMs** – model with four-element connecting flange, fixing lugs and a protecting insect screen.



Overall dimensions

Model	Dimensions [mm]							Free air, [m²]	Fig. no.
	H	B	L	L1	H1	B1	D		
MV 160	299	221	15	–	283	205	–	0.026	1, 2
MV 160 VD	299	221	15	42	283	205	100-150	0.026	1, 3

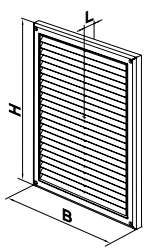

Fig. 1

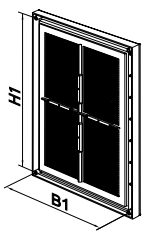

Fig. 2

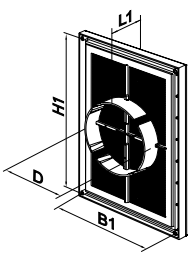

Fig. 3

MV 170
Series



Application

- Decoration of supply and exhaust vents of public, residential and industrial ventilation systems.
- Used for correct air flow distribution in premises.
- Wall or ceiling mounting.

Design

- Made of quality and durable plastic.
- Multi-element structure. The internal part is fixed to the base with latches for easy cleaning without dismantling.
- Screw fixing.

Colour modifications



Modifications

MV 170 – basic modification



- Wall or ceiling mounting.
- **MV 170 s** – model with a protecting insect screen.



MV 170 R – model with an air flow regulator (R)



- Equipped with a movable flap for air flow regulation.
- Air pass is regulated with a tilt wand or pull cords.
- **MV 170 Rs** – model with air flow regulator and a protecting insect screen.



MV 170 VD – model with four-element connecting flange (VD)



- Equipped with four-element connecting flange with adjustable diameter for connection to Ø 100-150 mm round air duct.
- **MV 170 VDs** – model with four-element connecting flange and a protecting insect screen.



MV 170 VDR – model with four-element connecting flange and air flow regulator



- Equipped with four-element connecting flange with adjustable diameter for connection to Ø 100-150 mm round air duct.
- Equipped with a movable flap for air flow regulation.
- Air pass is regulated with a tilt wand or pull cords.
- **MV 170 VDRs** – model with four-element connecting flange, air flow regulator and a protecting insect screen.



Overall dimensions

Model	Dimensions [mm]							Free air, [m²]	Fig. no.
	H	B	L	L1	H1	B1	D		
MV 170	221	299	15	–	205	283	–	0.0237	1
MV 170 VD	221	299	15	42	205	283	100-150	0.018	1, 2
MV 170 R	221	299	15	–	205	283	–	0.012	1
MV 170 VDR	221	299	15	42	205	283	100-150	0.088	1, 2

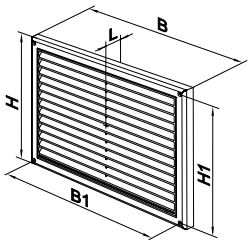

Fig. 1

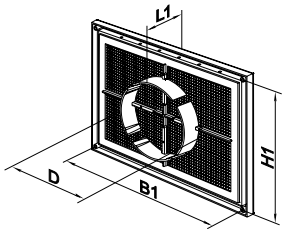

Fig. 2

MV 180
Series



Application

- Decoration of supply and exhaust vents of public, residential and industrial ventilation systems.
- Used for correct air flow distribution in premises.
- Wall or ceiling mounting.

Design

- Made of quality and durable plastic.
- Multi-element structure. The internal part is fixed to the base with latches for easy cleaning without dismantling.
- Fixing with screws or lugs depending on grille modification.

Colour modifications

white | brown | grey | beige | mahogany | lightwood | black

Modifications

Basic model: **MV 130**



- Grille for wall or ceiling mounting.
- **MV 130 s:** grille with a protecting insect screen



Model with a round flange **(V): MV 130 V**



- Equipped with a round connecting flange for mounting with Ø 125 mm air ducts.
- Suitable for direct mounting with the Vents VKO 125 fan.
- **MV 180 Vs:** grille with a round flange and a protective insect screen.



Model with a rectangular flange **(F): MV 180 F**



- Equipped with a rectangular flange 138x138 mm.
- **MV 180 Fs:** grille with a rectangular flange and a protective insect screen.



Model with a rectangular flange and gravity louver shutters **(JF): MV 180 JF**



- Grille for exhaust ventilation
- Equipped with a rectangular flange 138x138 mm.
- Equipped with gravity louver shutters for preventing back flow.
- **MV 180 Fs:** grille with a rectangular flange, louver shutters and a protective insect screen.



Model with an air flow regulator **(R): MV 180 R**



- Equipped with a movable flap for air flow regulation.
- Cross-sectional regulation with a tilt wand.
- **MV 180 Rs:** grille with an air flow regulator and a protective insect screen.



Model with a rectangular flange and an air flow regulator **(RF): MV 180 RF**



- Equipped with a rectangular flange 138x138 mm.
- Equipped with a movable flap for air flow regulation.
- Cross-sectional regulation with a tilt wand.
- **MV 180 Rs:** grille with an air flow regulator and a protective insect screen.



Overall dimensions

Model	Dimensions [mm]					Free air, [m²]	Fig. no.
	B	H1	L	L1	D		
MV 180	180	162	12,6	-	-	0,0091	1
MV 180 R	180	162	12,6	-	-	0,0091	1, 2
MV 130 V	180	162	12,6	28	125	0,0059	1, 3
MV 180 F	180	162	12,6	28	138x138	0,0091	1, 4
MV 180 RF	180	162	12,6	28	138x138	0,0091	1, 4
MV 180 JF	180	162	12,6	28	138x138	0,0091	1, 5

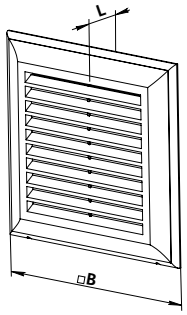

Fig. 1

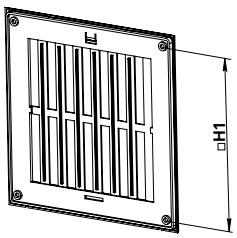

Fig. 2

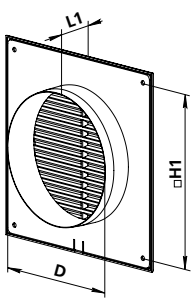

Fig. 3

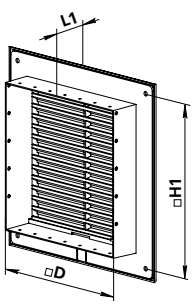

Fig. 4

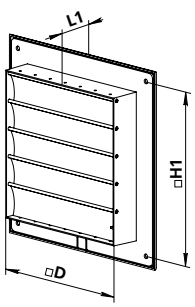

Fig. 5

MV 181
Series



Application

- Decoration of supply and exhaust vents of public, residential and industrial ventilation systems.
- Used for correct air flow distribution in premises.
- Wall or ceiling mounting.

Design

- Made of quality and durable plastic.
- Multi-element structure. The internal part is fixed to the base with latches for easy cleaning without dismantling.
- Fixing with screws or lugs depending on grille modification.

Colour modifications



Modifications

Basic model: **MV 181**



- Grille for wall or ceiling mounting.
- **MV 181 s:** grille with a protective insect screen.



Model with a rectangular flange **(F): MV 181 F**



- Equipped with a rectangular flange 138x208 mm.
- **MV 181 Fs:** grille with a rectangular flange and a protective insect screen.



Model with a rectangular flange and gravity louver shutters **(JF): MV 181 JF**



- Grille for exhaust ventilation.
- Equipped with a rectangular flange 138x208 mm.
- Equipped with gravity louver shutters for preventing back flow.
- **MV 181 JFs:** grille with a rectangular flange, louver shutters and a protective insect screen.



Model with an air flow regulator **(R): MV 181 R**



- Equipped with a movable flap for air flow regulation.
- Cross-sectional regulation with a tilt wand.
- **MV 181 Rs:** grille with an air flow regulator and a protective insect screen.



Model with a rectangular flange and an air flow regulator **(RF): MV 181 RF**



- Equipped with a rectangular flange 138x208 mm.
- Equipped with a movable flap for air flow regulation.
- Cross-sectional regulation with pull cords.
- **MV 181 RFs:** grille with a rectangular flange, air flow regulator and a protective insect screen.



Overall dimensions

Model	Dimensions [mm]									Free air, [m²]	Fig. no.
	B	H	B1	H1	H2	L	L1	D	D1		
MV 130x300	180	250	162	116	116	12,6	-	-		0,0146	1
MV 130x300 R	180	250	162	116	116	12,6	-	-		0,0146	1, 2
MV 130x300 F	180	250	162	116	116	12,6	28	138	208	0,0146	1, 3
MV 130x300 RF	180	250	162	116	116	12,6	28	138	208	0,0146	1, 3
MV 130x300 JF	180	250	162	116	116	12,6	28	138	208	0,0146	1, 4

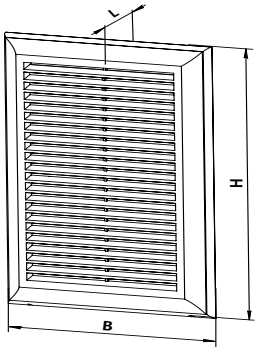

Fig. 1

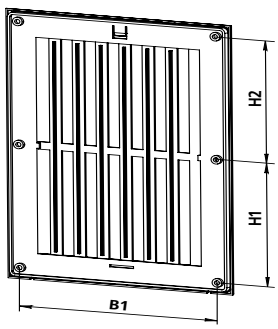

Fig. 2

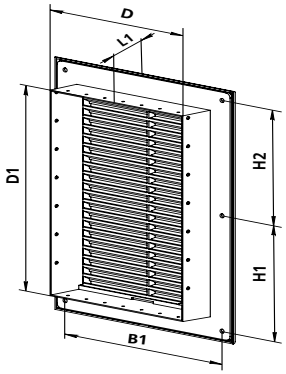

Fig. 3

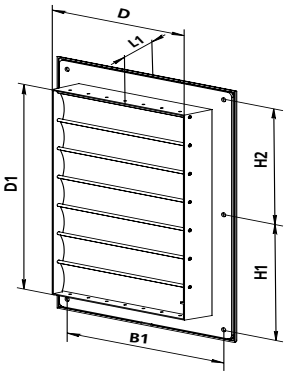

Fig. 4

MV 250
Series



Application

- Decoration of supply and exhaust vents of public, residential and industrial ventilation systems.
- Used for correct air flow distribution in premises.
- Wall or ceiling mounting.

Design

- Made of quality and durable plastic.
- Multi-element structure. The internal part is fixed to the base with latches for easy cleaning without dismantling.
- Fixing with screws or lugs depending on grille modification.

Colour modifications



Modifications

MV 250 – basic modification



- Screw fixing.
- **MV 250 s** – model with a protecting insect screen and screw fxing.
- **MV 250 M** – model with fixing lugs.
- **MV 250 Ms** – model with fixing lugs and a protecting insect screen.



MV 250 R – model with an air flow regulator **(R)**



- Equipped with a movable flap for air flow regulation.
- Air pass is regulated with a tilt wand or pull cords.
- **MV 250 Rs** – model with air flow regulator and a protecting insect screen.



MV 250/150 V – model with a round Ø 150 mm flange



- Wall or ceiling mounting.
- Fitted with a round connecting flange for mounting with Ø 150 mm air duct.
- Suitable for direct mounting with VENTS VKO 150 fan.
- Screw fixing.
- **MV 250/150 Vs** – model with a round flange and a protecting insect screen.



MV 250/200 V – model with a round Ø 200 mm flange



- OFitted with a round connecting flange for mounting with Ø 200 mm air duct.
- Screw fixing.
- **MV 250/200 Vs** – model with a round flange and a protecting insect screen.



MV 250/150 VR – model with a round Ø 150 mm flange and air flow regulator **(VR)**



- Fitted with a round connecting flange for mounting with Ø 150 mm air duct.
- Equipped with a movable flap for air flow regulation.
- Air pass is regulated with a tilt wand or pull cords.
- Suitable for direct mounting with VENTS VKO 150 fan.
- **MV 250/150 VRs** – model with a round flange, air flow regulator and a protecting insect screen.



MV 250/200 VR – model with a round Ø 200 mm flange and air flow regulator **(VR)**



- Fitted with a round connecting flange for mounting with Ø 200 mm air duct.
- Equipped with a movable flap for air flow regulation.
- Air pass is regulated with a tilt wand or pull cords.
- Screw fixing.
- **MV 250/200 VRs** – model with a round flange, air flow regulator and a protecting insect screen.



MV 250 VD – model with four-element connecting flange



- Equipped with four-element connecting flange with adjustable diameter for connection to Ø 100-150 mm round air duct.
- Screw fixing.
- MV 250 VDs – model with four-element flange and a protecting insect screen.



MV 250 VDR – model with four-element flange and air flow regulator **(VDR)**



- Equipped with four-element connecting flange with adjustable diameter for connection to Ø 100-150 mm round air duct.
- Equipped with a movable flap for air flow regulation.
- Air pass is regulated with a tilt wand or pull cords.
- Screw fixing.
- MV 250 VDRs – model with four-element flange, air flow regulator and a protecting insect screen.



Overall dimensions

Model	Dimensions [mm]					Free air, [m²]	Fig. no.
	□H	□B	L	L1	D		
MV 250	250	214	14	–	–	0.02	1, 2
MV 250 R	250	214	14	–	–	0.01	1, 2
MV 250/150 V	250	214	14	44	150	0.02	1, 3
MV 250/200 V	250	214	14	44	200	0.02	1, 3
MV 250/150 VR	250	214	14	44	150	0.01	1, 3
MV 250/200 VR	250	214	14	44	200	0.01	1, 3
MV 250 VD	250	214	14	42	100-150	0.02	1, 4
MV 250 VDR	250	214	14	42	100-150	0.01	1, 4

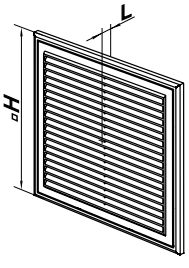

Fig. 1

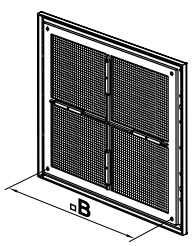

Fig. 2

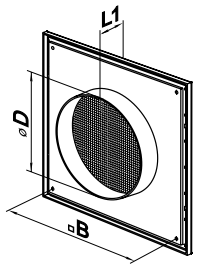

Fig. 3

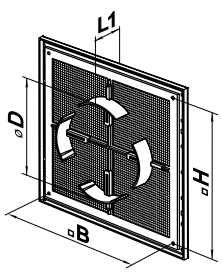

Fig. 4

MV 250-1
Series



Application

- Decoration of supply and exhaust vents of public, residential and industrial ventilation systems.
- Used for correct air flow distribution in premises.
- Wall or ceiling mounting.

Design

- Made of quality and durable plastic.
- Multi-element structure. The internal part is fixed to the base with latches for easy cleaning without dismantling.
- Fixing with glue or silicon.
- Modifications with a protecting insect screen are available.

Colour modifications



Modifications

MV 250–1 – basic modification



- Wall or ceiling mounting.
- **MV 250-1 s** – model with a protecting insect screen.
- Fixing with glue or silicon.



Overall dimensions

Model	Dimensions [mm]			Air pass, [m²]
	H	B	L	
MV 250-1	230	230	8	0.02

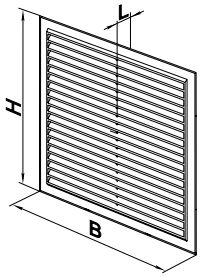

MV 80-1
Series



Application

- Decoration of supply and exhaust vents of public, residential and industrial ventilation systems.
- Used for correct air flow distribution in premises.
- Wall or ceiling mounting.

Design

- Made of quality and durable plastic.
- Multi-element structure. The internal part is fixed to the base with latches for easy cleaning without dismantling.
- Fixing with glue or silicon.
- Modifications with a protecting insect screen are available.

Colour modifications

white | brown | grey | beige | mahogany | lightwood | black

Modifications

MV 80-1 – basic modification



- Wall or ceiling mounting.
- **MV 80-1 s** – model with a protecting insect screen.
- Fixing with glue or silicon.



Overall dimensions

Model	Dimensions [mm]			Free air, [m²]
	H	B	L	
MV 80-1	80	170	7	0.0039

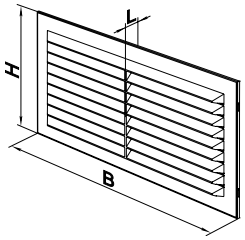

MV Series
single-element



Application

- Decoration of supply and exhaust vents of public, residential and industrial ventilation systems.
- Used for correct air flow distribution in premises.
- Wall or ceiling mounting.

Design

- Made of quality and durable plastic.
- Single-element structure.
- Various fixing modifications depending on the model type: screws, lugs or glue (silicon).
- Grille modifications with an insect screen.

Colour modifications

white | brown | grey | beige | mahogany | lightwood | black

Fixation options

Glue (silicone): **MV**	Screws: **MV**	Fixing lugs: **MV...M**







Overall dimensions

Model	Dimensions [mm]			Free air, [m²]
	H	B	L	
MV 150x150	150	150	11	0.0058
MV 175x175	175	175	11	0.0089
MV 205x205	205	205	11	0.0135
MV 215x175	215	175	11	0.0115
MV 250x180	250	180	11	0.0141
MV 250x250	250	250	11	0.0213
MV 295x160	295	160	11	0.0147
MV 300x205	300	205	11	0.0207
MV 300x300	300	300	11	0.0302
MV 350x350	350	350	11	0.0432

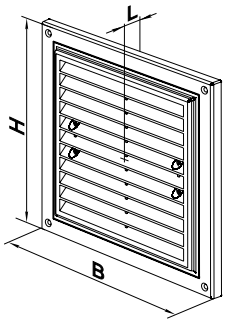

MV 50 bV
Series



MV 51 bV
Series



Application

- Suitable for installation in furniture, bathroom and kitchen door leaves, etc.
- Used to arrange correct air circulation in premises.

Design

- Made of quality and durable plastic.
- Fixed with mounting ribs or glue.

Colour modifications



Modifications

MV 50 bV – round model with a flange **(bV)**



- Round model with Ø 47 mm flange.
- Minimum door leaf thickness is 28 mm
- **MV 50 bVs** – model with a protecting insect screen.



MV 51 bV – round model with a flange **(bV)**



- Round model with Ø 47 mm flange.
- Minimum door leaf thickness is 28 mm
- **MV 51 bVs** – model with a protecting insect screen.



Overall dimensions

Model	Dimensions [mm]					Free air, [m²]	Fig.no.
	D	D1	D2	L	L1		
MV 50 bV	59	47	–	3.5	16.5	0.00078	1
MV 51 bV	59	47	–	3	16	0.00078	2

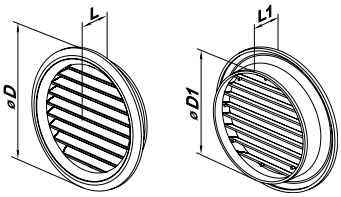

Fig. 1

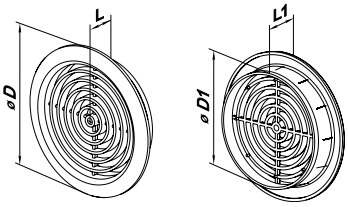

Fig. 2

MV 52 bV
Series



Application

- Suitable for installation in furniture, bathroom and kitchen door leaves, etc.
- Used to arrange correct air circulation in premises.

Design

- Made of quality and durable plastic.
- Fixed with mounting ribs or glue.

Colour modifications



Modifications

MV 52 bV – round model with a flange **(bV)**



- Round model with Ø 41 mm flange.
- Minimum door leaf thickness is 37 mm
- The complete set includes two items.
- The grilles are connected with slots.



Overall dimensions

Model	Dimensions [mm]					Free air, [m²]
	D	D1	D2	L	L1	
MV 52 bV	56	40	26	41.5	–	0.00053

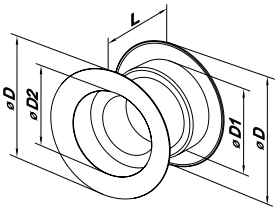



MV 80 bV Series

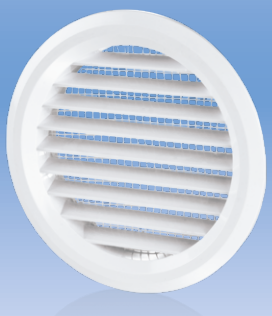

MV 81 bV Series



Application

- Decoration of supply and exhaust vents of public, residential and industrial ventilation systems.
- Wall or ceiling mounting.
- Suitable for installation in furniture, bathroom and kitchen door leaves, etc.

Design

- Made of quality and durable plastic.
- Fixed with mounting ribs or glue.

Colour modifications



Modifications

MV 80 bV – model with a round flange **(bV)**



- Equipped with a round flange for connection with Ø 80 mm air duct.
- MV 80 bVs – model with a protecting insect screen.



MV 81 bV – round model with a flange



- Equipped with a round flange for connection with Ø 80 mm air duct.
- MV 81 bVs – model with a protecting insect screen.



Overall dimensions

Model	Dimensions [mm]				Free air, [m²]	Fig. no.
	D	D1	L	L1		
MV 80 bV	100	80	5	19	0.0035	1
MV 81 bV	100	80	5	19	0.0035	2

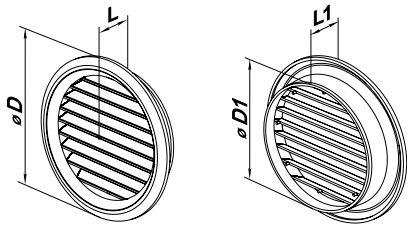

Fig. 1

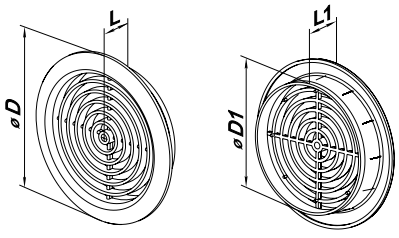

Fig. 2

MV 100 bV
MV 125 bV
MV 150 bV
Series



Application

- Decoration of supply and exhaust vents of public, residential and industrial ventilation systems.
- Used for correct air flow distribution in premises.
- Wall or ceiling mounting.

Design

- Made of quality and durable plastic.
- Fixing with screws or glue.
- Modifications with air flow regulator and a protecting insect screen are available.

Colour modifications



Modifications

MV 100 bV, MV 125 bV, MV 150 bV – round grilles with a flange **(bV)**



- Fitted with a round connecting flange for mounting to Ø 100 mm (**MV 100 bV**), Ø 125 mm (**MV 125 bV**) or Ø 150 mm (**MV 150 bV**) air ducts.
- **MV 100 bVs, MV 125 bVs, MV 150 bVs** – models with a protecting insect screen.



MV 100 bVR, MV 125 bVR, MV 150 bVR – models with a round flange and air flow regulator **(bVR)**



- Fitted with a round connecting flange for mounting to Ø 100 mm (**MV 100 bVR**), Ø 125 mm (**MV 125 bVR**) or Ø 150 mm (**MV 150 bVR**) air ducts.
- Equipped with a movable flap for air flow regulation with a slider.



MV 125 bVRD, MV 150 bVRD – models with air flow regulator and four-element connecting flange **(bVRD)**



- Equipped with four-element connecting flange with adjustable diameter for connection to Ø 100-125 mm (**MV 125 bVRD**) and Ø 100-150 mm (**MV 150 bVRD**) round air ducts.
- Equipped with a movable flap for air flow regulation with a slider.



Overall dimensions

Model	Dimensions [mm]				Free air, [m²]	Fig. no.
	L	B	D1	D		
MV 100 bV	29	118	100	128	0.004	1, 2
MV 100 bVR	29	118	100	128	0.005	1, 3
MV 125 bV	29	148	125	160	0.0065	1, 2
MV 125 bVR	29	148	125	160	0.005	1, 3
MV 125 bVRD	45	148	100-125	160	0.005	1, 4
MV 150 bV	29	176	150	200	0.01	1, 2
MV 150 bVR	29	176	150	200	0.005	1, 3
MV 150 bVRD	45	176	100-150	200	0.005	1, 4

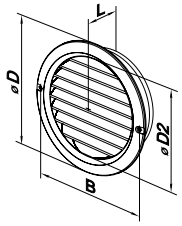

Fig. 1

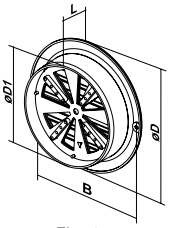

Fig. 3

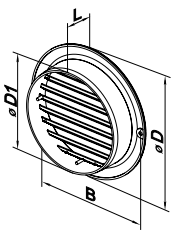

Fig. 2

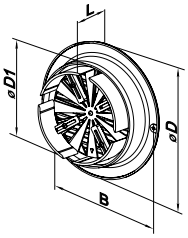

Fig. 4

Outer ventilation hood **MVVM 162** Mounting from inside

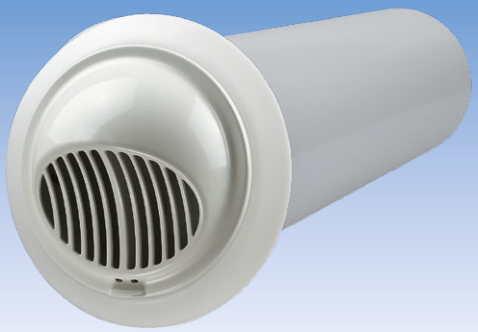

Application

- The outer hood is designed to prevent ingress of water and large objects into the ventilation equipment from outside.
- Pre-installed with a hood the air duct is mounted in a core hole drilled in the wall. The installation is done from inside.
- Special design allows installation of the hood by the operator on a wall of high-rise buildings and enables airtight sealing of the air duct in the core hole.

Design

- Made of high-quality incombustible ultraviolet resistant plastic.
- Fixation at the end of the air duct with latches.
- The air duct with diameter of 160 mm is made of high-quality PVC plastic.
- The ventilation hood [1] is equipped with a silicone sealing ring [2] that provides high sealing integrity of the air duct [3] in the core hole in the wall.

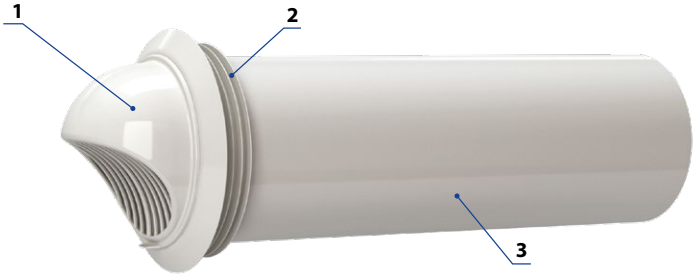

Mounting

- Drill a core hole with a diameter of 180 mm in the wall.
- Insert the hood into the wall core hole and push it until the sealing ring appears on the outer side.
- Pull the hood in the opposite direction so the silicone sealing ring provides tight seal between the hood and the wall.
- The air duct must be fixed in the wall core hole using mounting foam.

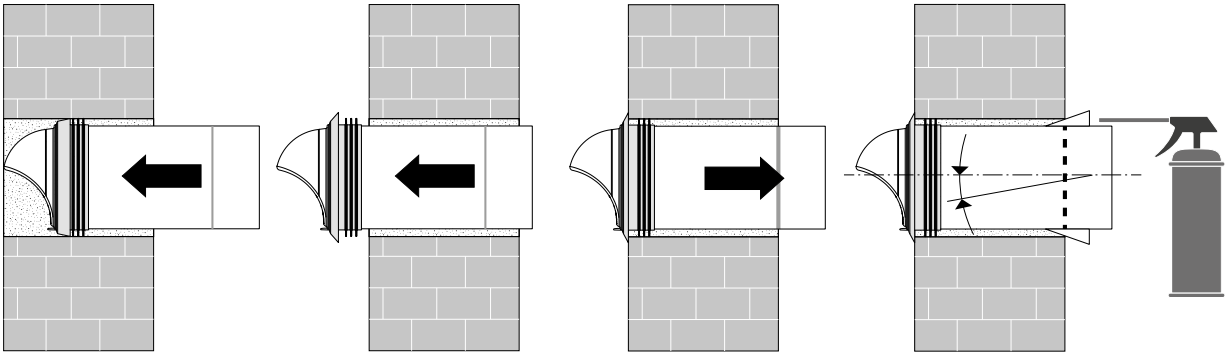

Overall dimensions

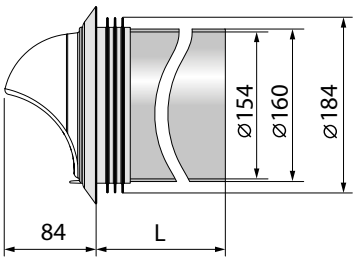

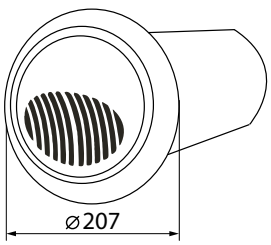

Model	L, mm	Free area, [m²]
MVVM 162	-	0.0078
MVVM 162 03	300	
MVVM 162 05	500	
MVVM 162 07	700	
MVVM 162 08	800	

MV 80 bF
MV 100 bF
MV120 bF
MV150 bF
Series



Application

- Decoration of supply and exhaust vents of public, residential and industrial ventilation systems.
- Used for correct air flow distribution in premises.
- Wall or ceiling mounting

Design

- Made of quality and durable plastic.
- Multi-element structure. The internal part is fixed to the base with latches for easy cleaning without dismantling.
- Fixing with screws

Colour modifications

white | brown | grey | beige | mahogany | lightwood | black

Modifications

Round model with a flange (**bF**): **MV 80bF, MV 100 bF, MV 120 bF, MV 150 bF**



- Fixed with mounting ribs or glue.
- Fitted with a round connecting flange for mounting to:
Ø 80 mm (**MV 80 bF**),
Ø 100 mm (**MV 100 bF**),
Ø 125 mm (**MV 120 bF**),
Ø 150 mm(**MV 150 bF**)
- **MV 80 bFs, MV 100 bFs, MV 120 bFs, MV 150 bFs** – models with a protecting insect screen.



Overall dimensions

Model	Dimensions [mm]					Free air, [m²]	Fig. no.
	H	B1	L	L1	D		
MV 80 bF	123	95	14	28	80	0,0033	1, 2
MV 100 bF	140	115	14	28	100	0,0048	
MV 120 bF	165	139	14	28	125	0,0073	
MV 150 bF	188	163	14	28	150	0,0106	

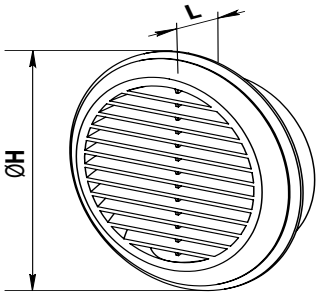

Fig. 1

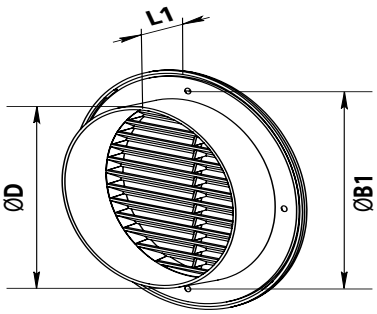

Fig. 2

MV 102
MV 122
MV 152
Series



Application

- Decoration of supply and exhaust vents of public, residential and industrial ventilation systems.
- External wall mounting.

Design

- Made of quality and durable plastic.
- Two-element structure for easy maintenance.
- Screw fixing.
- Equipped with a protecting grille against birds and rodents.

Colour modifications

white | brown | grey | beige | mahogany | lightwood | black

Modifications

MV 102, MV 122 – basic modifications



- Supply and exhaust hoods for wall mounting.
- Screw fixing.



MV 102 V, MV 122 V, MV 152 V – models with a round flange



- Supply and exhaust hoods for wall mounting.
- Equipped with a round connecting flange for mounting to Ø 100 mm (**MV 102 V**), Ø 125 mm (**MV 122 V**), Ø 150 mm (**MV 125 V**) air ducts.



MV 102 VU – model with a multi-section flange **(VU)**



- Supply and exhaust hood for wall mounting.
- Equipped with a connecting flange for mounting to Ø 100, 125 or 55x110 mm air ducts.



MV 122 VN – model with a flange with various diameters



- Supply and exhaust hood for wall mounting.
- Equipped with a round connecting flange with various diameters for mounting to Ø 100/110/120/130/150 mm air ducts.

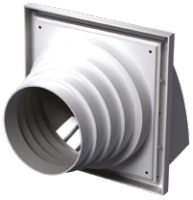

MV 102 K and **MV 122 K** – models with a backdraft damper



- Exhaust hoods for wall mounting.
- Fitted with a gravity backdraft damper for back flow prevention.



MV 102 VK, MV 122 VK, MV 152 VK – models with a round flange and a backdraft damper



- Exhaust hoods for wall mounting.
- Fitted with a gravity backdraft damper for back flow prevention.
- Equipped with a round connecting flange for mounting with Ø 100 mm (**MV 102 VK**), Ø 125 mm (**MV 122 VK**), Ø 150 mm (**MV 152 VK**) air ducts.



MV 102 VUK – model with a multi-section flange **(VU)**



- Exhaust hood for wall mounting.
- Fitted with a gravity backdraft damper for back flow prevention.
- Equipped with a multi-section flange for mounting with Ø 100, 125 mm or 55x110 mm air duct.

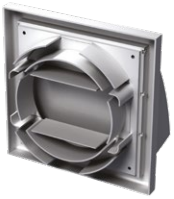

MV 122 VNK – model with a flange with various diameters **(VN)**



- Exhaust hood for wall mounting.
- Equipped with a round connecting flange with various diameters for mounting with Ø 100/110/120/130/150 mm air ducts.
- Fitted with a gravity backdraft damper for back flow prevention.

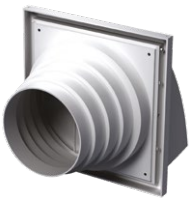

Overall dimensions

Model	Dimensions [mm]						Air pass, [m²]	Fig. no.
	□B	□H	L	L1	L2	Flange (D)		
MV 102 / MV 102 K	154	110	15	–	87	–	0.008	1
MV 102 V / MV 102 VK	154	110	15	45	87	100	0.008	1, 2
MV 102 VU / MV 102 VUK	154	110	15	39	87	100, 125, 55*110	0.008	1, 3
MV 122 / MV 122 K	186	142	15	–	101	–	0.012	1
MV 122 V / MV 122 VK	186	142	15	45	101	125	0.012	1, 2
MV 122 VN / MV 122 VNK	186	142	15	115	101	100, 110, 120, 130, 150	0.012	1.4
MV 152 V / MV 152 VK	186	142	15	50	101	150	0.012	1.2

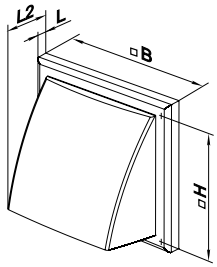

Fig. 1

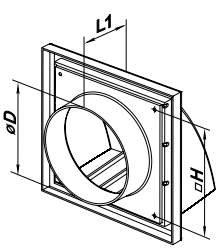

Fig. 2

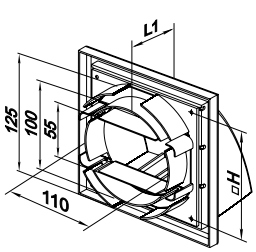

Fig. 3

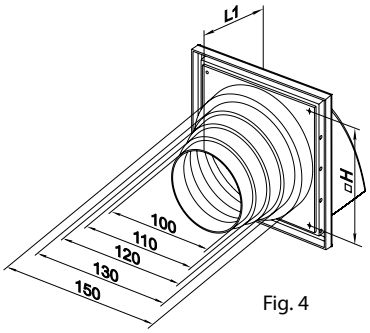

Fig. 4

MV 100 J
Series



Application

- Decoration of supply and exhaust vents of public, residential and industrial ventilation systems.
- External wall mounting.

Design

- Made of quality and durable plastic.
- Multi-element structure.
- Fitted with louvre shutters for back flow prevention.
- Screw fixing.

Colour modifications



Modifications

MV 100 J – basic model with gravity louvre shutters **(J)**



- Exhaust grille for wall mounting.
- Fitted with louvre shutters for back flow prevention.



MV 100 VJ – model with a round flange and gravity louvre shutters **(VJ)**



- Exhaust grille for wall mounting.
- Fitted with louvre shutters.
- Fitted with a round connecting flange for connection to Ø 100 mm air duct.



MV 100 VUJ – model with a multi-section flange and gravity louvre shutters **(VUJ)**



- Exhaust grille for wall mounting.
- Fitted with louvre shutters.
- Equipped with a connecting multi-section flange for connection to Ø 100, 125 mm or 55x110 mm air duct.

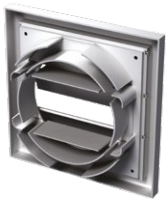

Overall dimensions

Model	Dimensions [mm]					Air pass, [m²]	Fig. no.
	□B	□H	L	L1	Flange (D)		
MV 100 J	154	110	15	–	–	0.0096	1, 2
MV 100 VJ	154	110	15	45	100	0.0075	1, 3
MV 100 VUJ	154	110	15	39	100, 125, 55x110	0.0096	1, 4

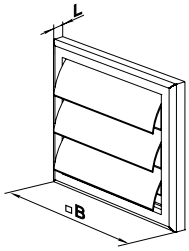

Fig. 1

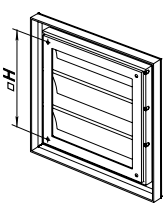

Fig. 2

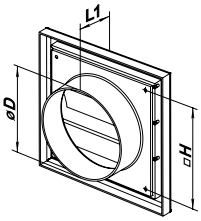

Fig. 3

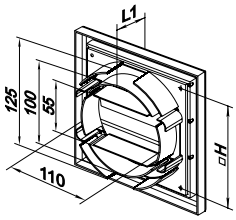

Fig. 4

MV 120 J
MV 150 VJ
Series



Application

- Decoration of supply and exhaust vents of public, residential and industrial ventilation systems.
- External wall mounting.

Design

- Made of quality and durable plastic.
- Multi-element structure.
- Fitted with louvre shutters for back flow prevention.
- Screw fixing.

Colour modifications



Modifications

MV 120 J – basic model with gravity louvre shutters **(J)**



- Exhaust grille for wall mounting.
- Fitted with louvre shutters for back flow prevention.



MV 120 VJ, MV 150 VJ – models with a round flange and louvre shutters **(VJ)**



- Exhaust grille for wall mounting.
- Fitted with louvre shutters.
- Fitted with a round connecting flange for mounting with Ø 125 mm air duct (**MV 120 J**) and 150 mm air duct (**MV 150 VJ**).



MV 120 VNJ – model with a flange with various diameters and louvre shutters **(VNJ)**



- Exhaust grille for wall mounting.
- Fitted with louvre shutters.
- Fitted with a round connecting flange for mounting with Ø 100/110/120/130/150 mm air duct.



Overall dimensions

Model	Dimensions [mm]					Air pass, [m²]	Fig. no.
	□B	□H	L	L1	Flange (D)		
MV 120 J	186	142	15	–	–	0.016	1, 2
MV 120 VJ	186	142	15	45	125	0.0113	1, 3
MV 120 VNJ	186	142	15	115	100, 110, 120, 130, 150	0.012	1, 4
MV 150 VJ	186	142	15	50	150	0.0113	1.3

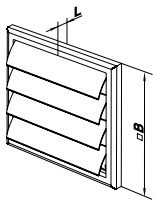

Fig. 1

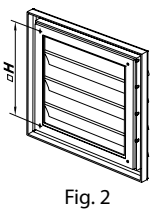

Fig. 2

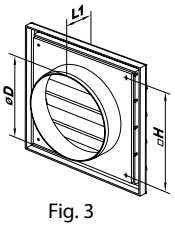

Fig. 3

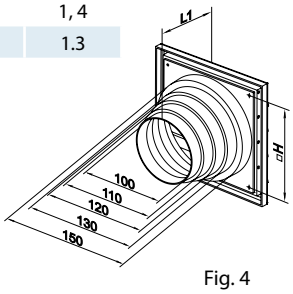

Fig. 4

MV 160 J
Series



Application

- Decoration of supply and exhaust vents of public, residential and industrial ventilation systems.
- External wall mounting.

Design

- Made of quality and durable plastic.
- Multi-element structure.
- Fitted with louvre shutters for back flow prevention.
- Screw fixing.

Colour modifications



Modifications

MV 160 J – basic model with gravity louvre shutters **(J)**



- Exhaust grille for wall mounting.
- Fitted with louvre shutters for back flow prevention.



MV 160 VJD – model with four-element flange and louvre shutters **(VJD)**



- Exhaust grille for wall mounting.
- Fitted with louvre shutters.
- Equipped with four-element connecting flange with adjustable diameter for connection to Ø 100-150 mm round air duct.



Overall dimensions

Model	Dimensions [mm]							Air pass, [m²]	Fig. no.
	B	H	B1	H1	D	L	L1		
MV 160 J	221	299	205	283	–	15	–	0.034	1, 2
MV 160 VJD	221	299	205	283	100-150	15	42	0.034	1, 3

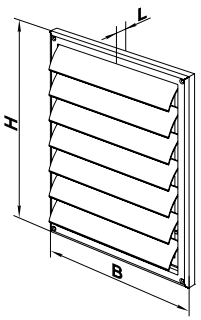

Fig. 1

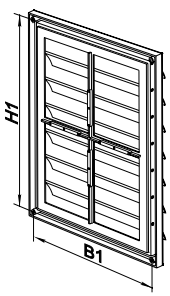

Fig. 2

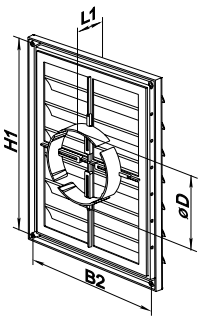

Fig. 3

MV 250 J
Series



Application

- Decoration of supply and exhaust vents of public, residential and industrial ventilation systems.
- External wall mounting.

Design

- Made of quality and durable plastic.
- Multi-element structure.
- Fitted with louvre shutters for back flow prevention.
- Screw fixing.

Colour modifications



Modifications

MV 250 J – basic model with gravity louvre shutters **(J)**



- Exhaust grille for wall mounting.
- Fitted with louvre shutters for back flow prevention.



MV 250/150 VJ, MV 250/200 VJ – models with a round flange and louvre shutters



- Fitted with a round connecting flange for mounting with Ø 150 mm (**MV 250/150 VJ**) or Ø 200 mm (**MV 250/200 VJ**) air ducts.
- Fitted with louvre shutters for back flow prevention.



MV 250 VJD – model with four-element flange and louvre shutters



- Equipped with four-element connecting flange with adjustable diameter for connection to Ø 100-150 mm round air duct.
- Fitted with louvre shutters.



Overall dimensions

Model	Dimensions [mm]					Air pass, [m²]	Fig. no.
	□B	□H	D	L	L1		
MV 250 J	250	214	–	15	–	0.0177-0.056	1, 2
MV 250 VJD	250	214	100-150	15	41	0.0177-0.056	1, 3
MV 250/150 VJ	250	214	150	15	41	0.0177-0.056	1, 4
MV 250/200 VJ	250	214	200	15	41	0.0177-0.056	1, 5

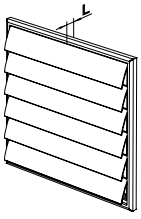

Fig. 1

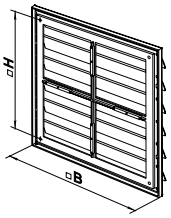

Fig. 2

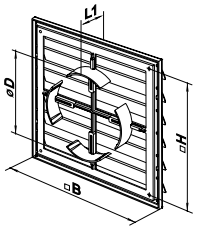

Fig. 3

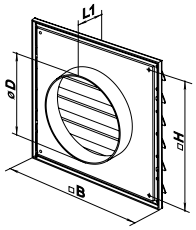

Fig. 4

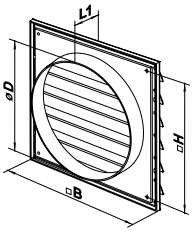

Fig. 5

MV 100 K
MV 125 K
Series



Application

- Decoration of supply and exhaust vents of public, residential and industrial ventilation systems.
- External wall mounting.

Design

- Made of quality and durable plastic.
- Designed for mounting with rigid air ducts.
- Extra ventilation grille is provided to arrange natural ventilation in premises with a gas stove.
- Equipped with deviators for back air flow prevention through the bottom ventilation grille.
- Screw fixing.
- The grille has a removable bottom part for easy cleaning.

Colour modifications

white, brown, grey, beige, mahogany, lightwood, black

Modifications

MV 100 K, MV 125 K – basic modifications



- For mounting with rigid Ø 100 mm (**MV 100 K**) or Ø 125 mm (**MV 125 K**) air ducts.
- **MV 100 Ks, MV 125 Ks** – models with a protecting insect screen.



Overall dimensions

Model	Dimensions [mm]							Free area, [m²]
	B	H	B2	H2	D	L	L1	
MV 100 K	182	252	160	226	100	10	45	0.0039
MV 125 K	182	252	160	226	125	10	45	0.0039

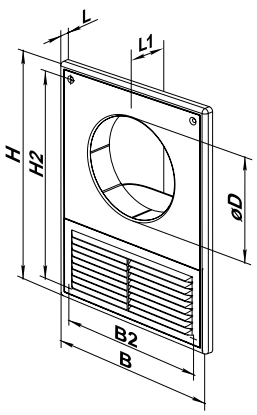



MV 100 KV
MV 120 KV
MV 125 KV
Series



Application

- Decoration of supply and exhaust vents of public, residential and industrial ventilation systems.
- Wall mounting.

Design

- Made of quality and durable plastic.
- Suitable for mounting with flexible air ducts.
- Equipped with deviators for back air flow prevention through the bottom ventilation grille.
- Extra ventilation grille is provided to arrange natural ventilation in premises with a gas stove.
- Screw fixing.
- The grille has a removable bottom part for easy cleaning.

Colour modifications

white | brown | grey | beige | mahogany | lightwood | black

Modifications

MV 100 KV, MV 120 KV, MV 125 KV – models with a round flange **(KV)**



- Equipped with a round flange for connection to Ø 100 mm (**MV 100 KV**), Ø 120 mm (**MV 120 KV**), Ø 125 mm (**MV 125 KV**) air ducts.
- **MV 100 KVs, MV 120 KVs, MV 125 Ks** – models with a protecting insect screen.



Overall dimensions

Model	Dimensions [mm]							Air pass, [m²]
	B	H	B1	H1	D	L1	L	
MV 100 KV	182	252	160	226	100	75	10	0.0039
MV 120 KV	182	252	160	226	120	75	10	0.0039
MV 125 KV	182	252	160	226	125	75	10	0.0039

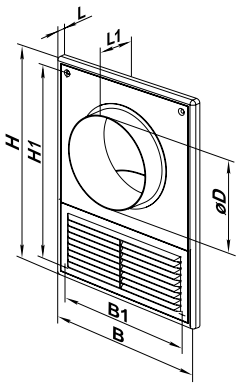

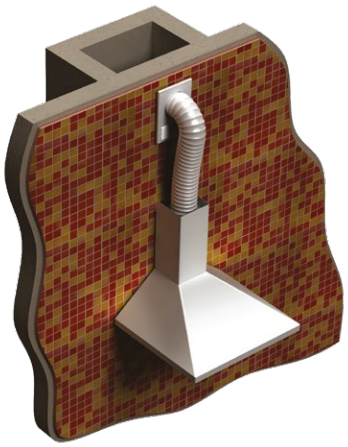

ASA PLASTIC VENTILATION GRILLES

External ventilation grilles made of weather–resistant ASA plastic.

ASA (Acrylonitrile Styrene Acrylate) plastic is a 3-D polystyrene-copolymer with butadiene rubber, an updated version of ABS plastic.

Due to the specially selected balance of mechanical and physical features the material is the ideal option for external plastic products. ASA plastic is UV- and weather-resistant, durable and long-lasting.

ASA und ABS polymers have a similar chemical structure. Acrylonitrile and styrene ensure water resistance, elasticity and hardness. Butadiene rubber adds higher density for ASA plastic and improves its chemical composition. The products made of ASA plastic have numerous benefits:

- high UV-resistance (due to single covalent bonds ASA plastic is less prone to oxidation and UV exposure)
- high temperature resistance (thermal deformation temperature is +91 °C)
- excellent flexibility and high ultimate resistance (changing of plasticity index does not exceed 2 %)
- fire resistance
- weather resistance (no loss of mechanical properties and deterioration of exterior caused by negative weather impact)

ASA plastic application

ASA polymers are used in ventilation and car industry (xenon headlamps, car spoilers, radiator grilles, bodies for rear-view mirror). Owing to high performance features of ASA plastic it is used for manufacture of window profiles, plastic roofs, external ventilation parts.

Therefore you can shop ASA plastic ventilation grilles by VENTS with entire confidence that they will reliably serve and retain their visual appeal for years to come. The external grilles are available in white, brown and beige colour modifications.





Benefits of ASA plastic products

ASA UV STABIL
UV-resistant

High mechanical toughness and UV-resistance.

Reliable

Reliability.
Long-term retention of basic characteristics.

High light resistant

Heat-ageing resistance. The colours remain bright and clear even after many years of weather exposure.

Chemical resistant

Resistant to sulphuric acid, alkali, ammonia, diesel fuel and engine oil, ethanol and ethylene glycol.

Temperature resistant

High heat and frost resistance means no deformation and no cracks during outer temperature and humidity drops.

Impact resistant

Improved impact resistance.

Contents

Supply and exhaust grilles


MV 100 V ASA series — page 246


MV 120 V ASA series — page 247


MV 150 V ASA series — page 248


MV 250 ASA series — page 249

Round supply and exhaust grilles


MV 100 bV ASA, MV 125 bV ASA, MV 150 bV ASA series — page 250

Supply and exhaust ventilation hoods


MV 102 V ASA, MV 122 V ASA, MV 152 V ASA series — page 251

Exhaust grilles


MV 100 J ASA series — page 252


MV 120 J ASA, MV 150 VJ ASA series — page 253


MV 250 J ASA series — page 254

MV 100 V ASA
Series



Application

- Decoration of supply and exhaust vents of public, residential and industrial ventilation systems.
- Used for correct air flow distribution in premises.
- Wall or ceiling mounting.

Design

- Made of quality and durable plastic.
- Multi-element structure. The internal part is fixed to the base with latches for easy cleaning without dismantling.
- Screw fixing.
- The grille has slanted vanes.

Colour modifications

white brown beige

Modifications

MV 100 V ASA – model with a round flange **(V)**



- Fitted with a round connecting flange for mounting with Ø 100 mm air duct.
- Suitable for direct mounting with VENTS VKO 100 fan.
- **MV 100 Vs ASA** – model with a round flange and a protecting insect screen.



MV 100 VU ASA – model with a multi-section flange **(VU)**



- Equipped with a multi-section connecting flange for mounting with Ø100, 125 mm or 55x110 mm air duct.
- **MV 100 VUs ASA** – model with a multi-section flange and a protecting insect screen.



Overall dimensions

Model	Dimensions [mm]					Free area, [m²]	Fig. no.
	□B	□H	L	L1	Flange (D)		
MV 100 V ASA	154	110	15	45	100	0.004	1, 2
MV 100 VU ASA	154	110	15	39	100, 125, 55x110	0.0067	1, 3

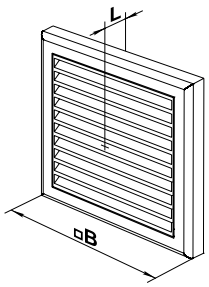

Fig. 1

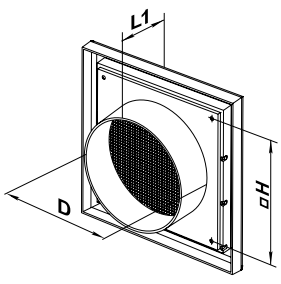

Fig. 2

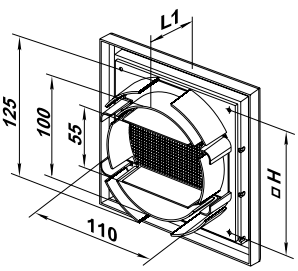

Fig. 3

MV 120 V ASA
Series



Application

- Decoration of supply and exhaust vents of public, residential and industrial ventilation systems.
- Used for correct air flow distribution in premises.
- Wall or ceiling mounting.

Design

- Made of quality and durable plastic.
- Multi-element structure. The internal part is fixed to the base with latches for easy cleaning without dismantling.
- Screw fixing.
- The grille has slanted vanes.

Colour modifications

white brown beige

Modifications

MV 120 V ASA – model with a round flange **(V)**



- Fitted with a round connecting flange for mounting with Ø 125 mm air duct.
- Suitable for direct mounting with VENTS VKO 125 fan.
- **MV 120 Vs ASA** – model with a round flange and a protecting insect screen.



Overall dimensions

Model	Dimensions [mm]					Free area, [m²]	Fig. no.
	□B	□H	L	L1	Flange (D)		
MV 120 V ASA	186	142	15	45	125	0.0083	1, 2

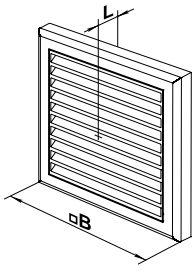

Fig. 1

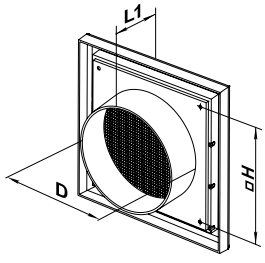

Fig. 2

MV 150 V ASA
Series



Application

- Decoration of supply and exhaust vents of public, residential and industrial ventilation systems.
- Used for correct air flow distribution in premises.
- Wall or ceiling mounting.

Design

- Made of quality and durable plastic.
- Multi-element structure. The internal part is fixed to the base with latches for easy cleaning without dismantling.
- Screw fixing.
- The grille has slanted vanes.

Colour modifications

white brown beige

Modifications

MV 150 V ASA – model with a round flange **(V)**



- Fitted with a round connecting flange for mounting with Ø 150 mm air duct.
- Suitable for direct mounting with VENTS VKO 150 fan.
- **MV 150 Vs ASA** – model with a round flange and a protecting insect screen.



Overall dimensions

Model	Dimensions [mm]					Free area, [m²]	Fig. no.
	□B	□H	L	L1	Flange (D)		
MV 150 V ASA	186	142	15	50	150	0.0083	1, 2

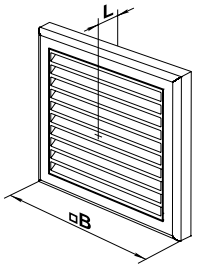

Fig. 1

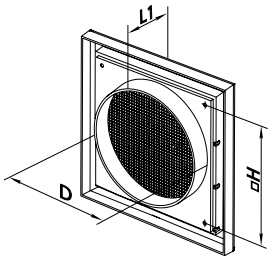

Fig. 2

MV 250 ASA
Series



Application

- Decoration of supply and exhaust vents of public, residential and industrial ventilation systems.
- Used for correct air flow distribution in premises.
- Wall or ceiling mounting.

Design

- Made of quality and durable plastic.
- Multi-element structure. The internal part is fixed to the base with latches for easy cleaning without dismantling.
- Fixing with screws or lugs depending on grille modification.

Colour modifications

white brown beige

Modifications

MV 250/150 V ASA – model with a round Ø 150 mm flange



- Wall or ceiling mounting.
- Fitted with a round connecting flange for mounting with Ø 150 mm air duct.
- Suitable for direct mounting with VENTS VKO 150 fan.
- Screw fixing.
- **MV 250/150 Vs ASA** – model with a round flange and a protecting insect screen.



MV 250/200 V ASA – model with a round Ø 200 mm flange



- OFitted with a round connecting flange for mounting with Ø 200 mm air duct.
- Screw fixing.
- **MV 250/200 Vs ASA** – model with a round flange and a protecting insect screen.



MV 250 VD ASA – model with four-element connecting flange



- Equipped with four-element connecting flange with adjustable diameter for connection to Ø 100-150 mm round air duct.
- Screw fixing.
- **MV 250 VDs ASA** – model with four-element flange and a protecting insect screen.



Overall dimensions

Model	Dimensions [mm]					Free area, [m²]	Fig. no.
	□B	□H	L	L1	Flange (D)		
MV 250/150 V ASA	250	214	14	44	150	0.02	1, 2
MV 250/200 V ASA	250	214	14	44	200	0.02	1, 2
MV 250 VD ASA	250	214	14	42	100-150	0.02	1, 3

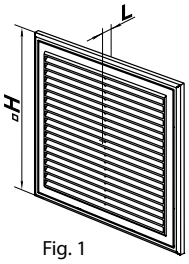

Fig. 1

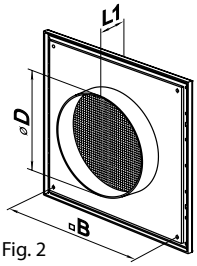

Fig. 2

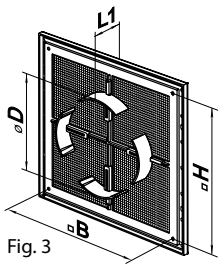

Fig. 3

MV 100 bV ASA
MV 125 bV ASA
MV 150 bV ASA
Series



Application

- Decoration of supply and exhaust vents of public, residential and industrial ventilation systems.
- Used for correct air flow distribution in premises.
- Wall or ceiling mounting.

Design

- Made of quality and durable plastic.
- Fixing with screws or glue.
- Modifications with air flow regulator and a protecting insect screen are available.

Colour modifications

white brown beige

Modifications

MV 100 bV ASA, MV 125 bV ASA, MV 150 bV ASA – round grilles with a flange **(bV)**



- Fitted with a round connecting flange for mounting to Ø 100 mm (**MV 100 bV ASA**), Ø 125 mm (**MV 125 bV ASA**) or Ø 150 mm (**MV 150 bV ASA**) air ducts.
- **MV 100 bVs ASA, MV 125 bVs ASA, MV 150 bVs ASA** – models with a protecting insect screen.



MV 100 bVR ASA – models with a round flange and air flow regulator **(bVR)**



- Fitted with a round connecting flange for mounting to Ø 100 mm.
- Equipped with a movable flap for air flow regulation with a slider.
- **MV 100 bVRs ASA** – with a protecting insect screen.



MV 125 bVRD ASA, MV 150 bVRD ASA – models with air flow regulator and four-element connecting flange **(bVRD)**



- Equipped with four-element connecting flange with adjustable diameter for connection to Ø 100-125 mm (**MV 125 bVRD ASA**) and Ø 100-150 mm (**MV 150 bVRD ASA**) round air ducts.
- Equipped with a movable flap for air flow regulation with a slider.



Overall dimensions

Model	Dimensions [mm]				Free area, [m²]	Fig. no.
	L	B	D1	D		
MV 100 bV ASA	29	118	100	128	0.004	1, 2
MV 100 bVR ASA	29	118	100	128	0.005	1, 3
MV 125 bV ASA	29	148	125	160	0.0065	1, 2
MV 125 bVRD ASA	45	148	100-125	160	0.005	1, 4
MV 150 bV ASA	29	176	150	200	0.01	1, 2
MV 150 bVRD ASA	45	176	100-150	200	0.005	1, 4

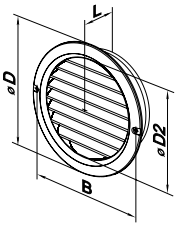

Fig. 1

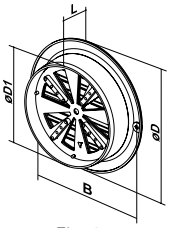

Fig. 3

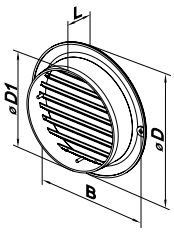

Fig. 2

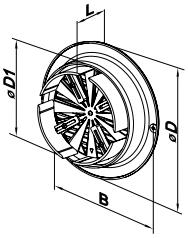

Fig. 4

MV 102 V ASA
MV 122 V ASA
MV 152 V ASA
Series



Application

- Decoration of supply and exhaust vents of public, residential and industrial ventilation systems.
- External wall mounting.

Design

- Made of quality and durable plastic.
- Two-element structure for easy maintenance.
- Screw fixing.
- Equipped with a protecting grille against birds and rodents.

Colour modifications

white brown beige

Modifications

MV 102 VK ASA, MV 122 VK ASA, MV 152 VK ASA – models with a round flange and a backdraft damper



- Exhaust hoods for wall mounting.
- Fitted with a gravity backdraft damper for back flow prevention.
- Equipped with a round connecting flange for mounting with Ø 100 mm (**MV 102 VK ASA**), Ø 125 mm (**MV 122 VK ASA**), Ø 150 mm (**MV 152 VK ASA**) air ducts.



MV 102 VUK ASA – model with a multi-section flange **(VU)**



- Exhaust hood for wall mounting.
- Fitted with a gravity backdraft damper for back flow prevention.
- Equipped with a multi-section flange for mounting with Ø 100, 125 mm or 55x110 mm air duct.

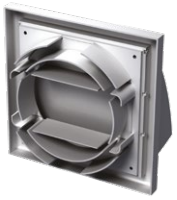

Overall dimensions

Model	Dimensions [mm]						Free area, [m²]	Fig. no.
	□B	□H	L	L1	L2	Flange (D)		
MV 102 VK ASA	154	110	15	45	87	100	0.008	1, 2
MV 102 VUK ASA	154	110	15	39	87	100, 125, 55*110	0.008	1, 3
MV 122 VK ASA	186	142	15	45	101	125	0.012	1, 2
MV 152 VK ASA	186	142	15	50	101	150	0.012	1.2

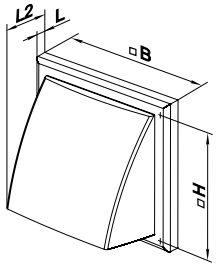

Fig. 1

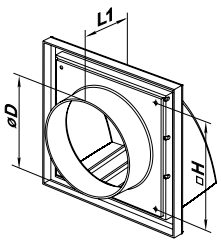

Fig. 2

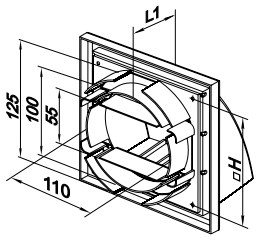

Fig. 3

MV 100 J ASA
Series



Application

- Decoration of supply and exhaust vents of public, residential and industrial ventilation systems.
- External wall mounting.

Design

- Made of quality and durable plastic.
- Multi-element structure.
- Fitted with louvre shutters for back flow prevention.
- Screw fixing.

Colour modifications

white brown beige

Modifications

MV 100 VJ ASA – model with a round flange and gravity louvre shutters **(VJ)**



- Exhaust grille for wall mounting.
- Fitted with louvre shutters.
- Fitted with a round connecting flange for connection to Ø 100 mm air duct.



MV 100 VUJ ASA – model with a multi-section flange and gravity louvre shutters **(VUJ)**



- Exhaust grille for wall mounting.
- Fitted with louvre shutters.
- Equipped with a connecting multi-section flange for connection to Ø 100, 125 mm or 55x110 mm air duct.



Overall dimensions

Model	Dimensions [mm]					Free area, [m²]	Fig. no.
	□B	□H	L	L1	Flange (D)		
MV 100 VJ ASA	154	110	15	45	100	0.0075	1, 2
MV 100 VUJ ASA	154	110	15	39	100, 125, 55x110	0.0096	1, 3

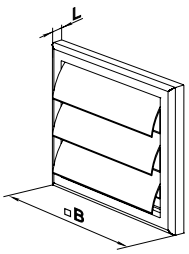

Fig. 1

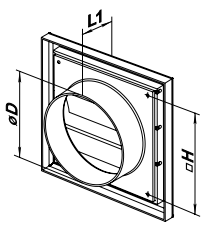

Fig. 2

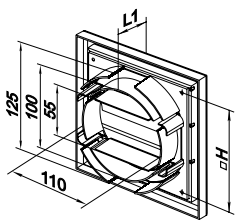

Fig. 3

MV 120 VJ ASA
MV 150 VJ ASA
Series



Application

- Decoration of supply and exhaust vents of public, residential and industrial ventilation systems.
- External wall mounting.

Design

- Made of quality and durable plastic.
- Multi-element structure.
- Fitted with louvre shutters for back flow prevention.
- Screw fixing.

Colour modifications

white | brown | beige

Modifications

MV 120 VJ ASA, MV 150 VJ ASA – models with a round flange and louvre shutters **(VJ)**



- Exhaust grille for wall mounting.
- Fitted with louvre shutters.
- Fitted with a round connecting flange for mounting with Ø 125 mm air duct (**MV 120 VJ ASA**) and 150 mm air duct (**MV 150 VJ ASA**).



Overall dimensions

Model	Dimensions [mm]					Free area, [m²]	Fig. no.
	□B	□H	L	L1	Flange (D)		
MV 120 VJ ASA	186	142	15	45	125	0.0113	1, 2
MV 150 VJ ASA	186	142	15	50	150	0.0113	1, 2

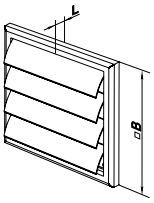

Fig. 1

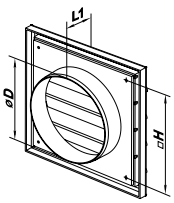

Fig. 2

MV 250 J ASA
Series



Application

- Decoration of supply and exhaust vents of public, residential and industrial ventilation systems.
- External wall mounting.

Design

- Made of quality and durable plastic.
- Multi-element structure.
- Fitted with louvre shutters for back flow prevention.
- Screw fixing.

Colour modifications

white brown beige

Modifications

MV 250/150 VJ ASA, MV 250/200 VJ ASA – models with a round flange and louvre shutters



- Fitted with a round connecting flange for mounting with Ø 150 mm (**MV 250/150 VJ ASA**) or Ø 200 mm (**MV 250/200 VJ ASA**) air ducts.
- Fitted with louvre shutters for back flow prevention.



MV 250 VJD ASA – model with four-element flange and louvre shutters



- Equipped with four-element connecting flange with adjustable diameter for connection to Ø 100-150 mm round air duct.
- Fitted with louvre shutters.



Overall dimensions

Model	Dimensions [mm]					Free area, [m²]	Fig. no.
	□B	□H	D	L	L1		
MV 250 VJD ASA	250	214	100-150	15	41	0.0177-0.056	1, 2
MV 250/150 VJ ASA	250	214	150	15	41	0.0177-0.056	1, 3
MV 250/200 VJ ASA	250	214	200	15	41	0.0177-0.056	1, 4

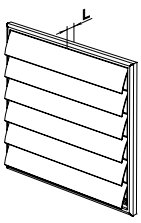

Fig. 1

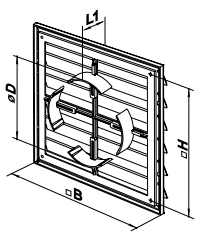

Fig. 2

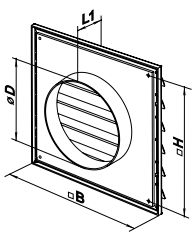

Fig. 3

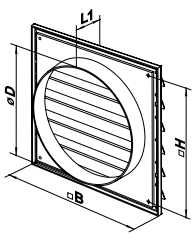

Fig. 4

DOOR
PLASTIC GRILLES



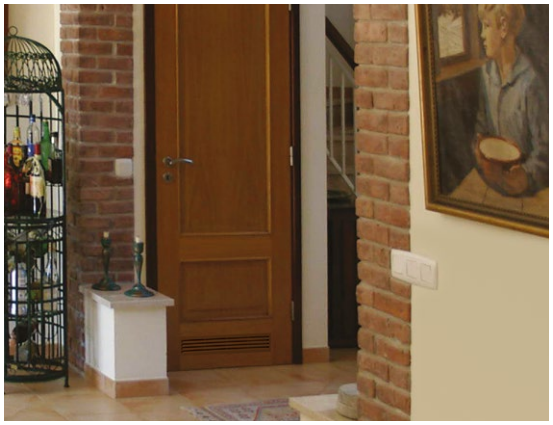





Supply and exhaust door grille
MV 350 Series
page 258



Supply and exhaust door grille
MV 350/2 Series
page 259



Supply and exhaust door grille
MV 450 Series
page 260



Supply and exhaust door grille
MV 450/2 Series
page 261



Supply and exhaust door grille
MV 380 Series
page 262



Supply and exhaust door grille
MV 380/2 Series
page 263



Supply and exhaust door grille
MV 430/2 Series
page 264



Supply and exhaust door grille
MV 440/2 Series
page 265



Supply and exhaust door grille
MV 240x60 Series
page 266

MV 350
Series



Application

- Mounting in door leaves of bathrooms, kitchens, etc.
- Suitable for installation into window sills for correct warm air distribution from radiators.
- Used to arrange correct air circulation in premises.

Design

- Made of high quality plastic.
- Available in various colour modifications.
- Fixing with screws directly to a door leaf or to window sills.
- Modifications with a protecting insect screen or a movable flap for air flow regulation are available.

Colour modifications



Modifications

MV 350 – basic modification



- Mounting in door leaves of bathrooms, kitchens, etc.
- Minimum door leaf thickness is 32 mm.
- Required cutout area in door leaf is 95x334 mm.
- **MV 350 s** – model with a protecting insect screen.

MV 350 R – model with an air flow regulator **(R)**



- Mounting in door leaves of bathrooms, kitchens, etc.
- Minimum door leaf thickness is 32 mm.
- Required cutout area in door leaf for **MV 350 R** model is 95x334 mm.
- **MV 350 Rs** – model with a movable flap for air flow regulation and a protecting insect screen.

Overall dimensions

Model	Dimensions [mm]		Air pass, [m²]
	H	L	
MV 350	130	368	0.014
MV 350 R	130	368	0.0095

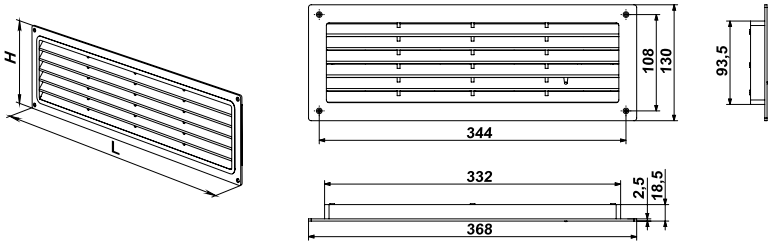

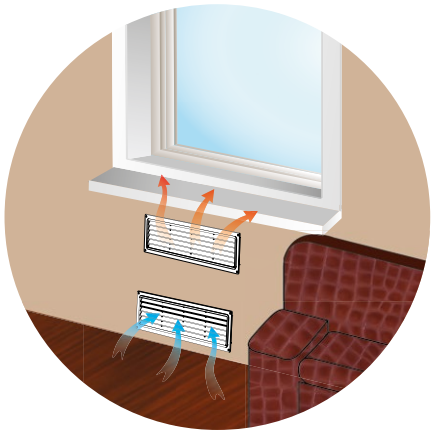



MV 350/2
Series



Application

- Mounting in door leaves of bathrooms, kitchens, etc.
- Used to arrange correct air circulation in premises.

Design

- The grille consists of two parts.
- Made of high quality plastic.
- Available in various colour modifications.
- Fixing with screws directly to a door leaf.
- Modifications with a protecting insect screen or a movable flap for air flow regulation are available.

Colour modifications



MV 350/2 – basic modification



- Mounting in door leaves of bathrooms, kitchens, etc.
- Minimum door leaf thickness is 32 mm.
- Required cutout area in door leaf for **MV 350/2** model is 95x334 mm.
- **MV 350/2s** – model with a protecting insect screen.

MV 350 R/2 – model with an air flow regulator **(R)**



- Mounting in door leaves of bathrooms, kitchens, etc.
- Minimum door leaf thickness is 32 mm.
- Required cutout area in door leaf for **MV 350 R/2** model is 95x334 mm.
- **MV 350 R/2s** – model with a protecting insect screen.

Overall dimensions

Model	Dimensions [mm]		Air pass, [m²]
	H	L	
MV 350/2	130	368	0.014
MV 350 R/2	130	368	0.0065

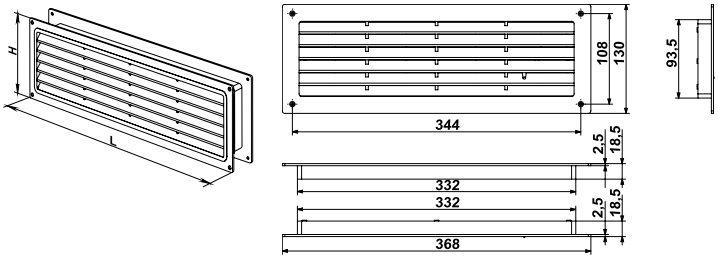

MV 450
Series



Application

- Mounting in door leaves of bathrooms, kitchens, etc.
- Suitable for installation into window sills for correct warm air distribution from radiators.
- Used to arrange correct air circulation in premises.

Design

- Made of high quality plastic.
- Available in various colour modifications.
- Fixing with screws directly to a door leaf or to window sills .
- Modifications with a protecting insect screen or a movable flap for air flow regulation are available.

Colour modifications



Modifications

MV 450 – basic modification



- Mounting in door leaves of bathrooms, kitchens, etc.
- Minimum door leaf thickness is 32 mm.
- Required cutout area in door leaf for **MV 450** model is 95x432 mm.
- **MV 450 s** – model with a protecting insect screen.

MV 450 R – model with air flow regulator **(R)**



- Mounting in door leaves of bathrooms, kitchens, etc.
- Minimum door leaf thickness is 32 mm.
- Required cutout area in door leaf for **MV 450 R** model is 95x432 mm.
- **MV 450 Rs** – model with a movable flap and a protecting insect screen.

Overall dimensions

Model	Dimensions [mm]		Air pass, [m²]
	H	L	
MV 450	124	462	0.019
MV 450 R	124	462	0.015

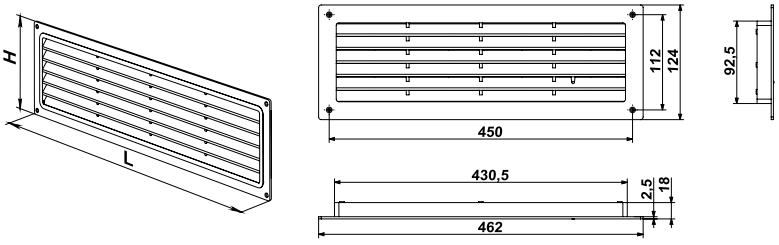

MV 450/2
Series



Application

- Mounting in door leaves of bathrooms, kitchens, etc.
- Used to arrange correct air circulation in premises.

Design

- The grille consists of two parts.
- Made of high quality plastic.
- Available in various colour modifications.
- Fixing with screws directly to a door leaf.
- Modifications with an insect screen or a movable flap for air flow regulation are available.

Colour modifications



Modifications

MV 450/2 – double grille models



- Mounting in door leaves of bathrooms, kitchens, etc.
- Minimum door leaf thickness is 32 mm.
- Required cutout area in door leaf for **MV 420/2** model is 95x432 mm.
- **MV 450/2s** – model with a protecting insect screen.

MV 450 R/2 – double models with air flow regulator **(R)**



- Mounting in door leaves of bathrooms, kitchens, etc.
- Minimum door leaf thickness is 32 mm.
- Required cutout area in door leaf for **MV 450 R/2** model is 95x432 mm.
- **MV 450 R/2s** – models with a protecting insect screen.

Overall dimensions

Model	Dimensions [mm]		Air pass, [m²]
	H	L	
MV 450/2	124	462	0.019
MV 450 R/2	124	462	0.015

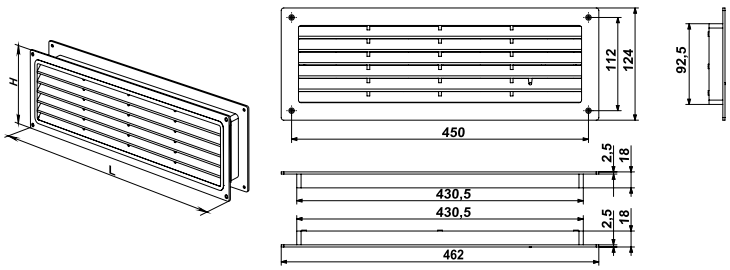

MV 380
Series



Application

- Mounting in door leaves of bathrooms, kitchens, etc.
- Suitable for installation into window sills for correct warm air distribution from radiators.
- Used to arrange correct air circulation in premises.

Design

- Made of high quality plastic.
- Available in various colour modifications.
- Fixing with screws directly to a door leaf or to window sills.
- Modifications with a protecting insect screen or a movable flap for air flow regulation are available.

Colour modifications



Modifications

- **MV 380 s** – model with a protecting insect screen.

Overall dimensions

Model	Dimensions [mm]		Air pass, [m²]
	H	L	
MV 380	104	382	0.0078

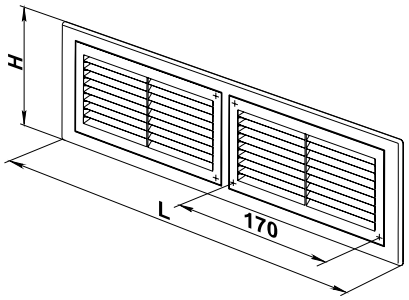

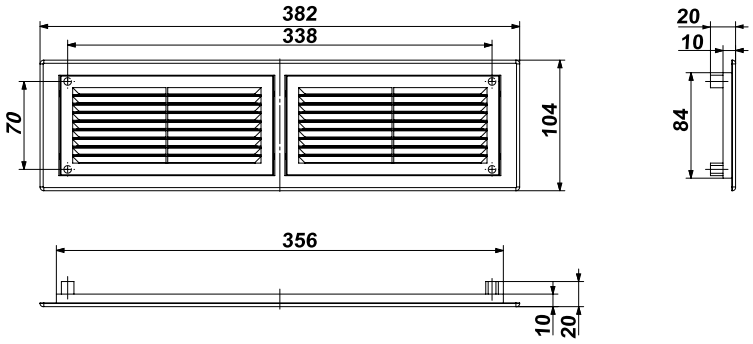







MV 380/2
Series



Application

- Mounting in door leaves of bathrooms, kitchens, etc.
- Used to arrange correct air circulation in premises.

Design

- Two-section grille.
- Made of high quality plastic.
- Available in various colour modifications.
- The mating grille parts are connected by slots and fixed with screws.
- Minimum door leaf thickness is 29 mm.
- Required cutout area in door leaf is 86x358 mm.
- Modifications with a protecting insect screen are available.

Colour modifications



Modifications

- **MV 380/2 s** – model with a protecting insect screen.

Overall dimensions

Model	Dimensions [mm]		Air pass, [m²]
	H	L	
MV 380/2	104	382	0.0078

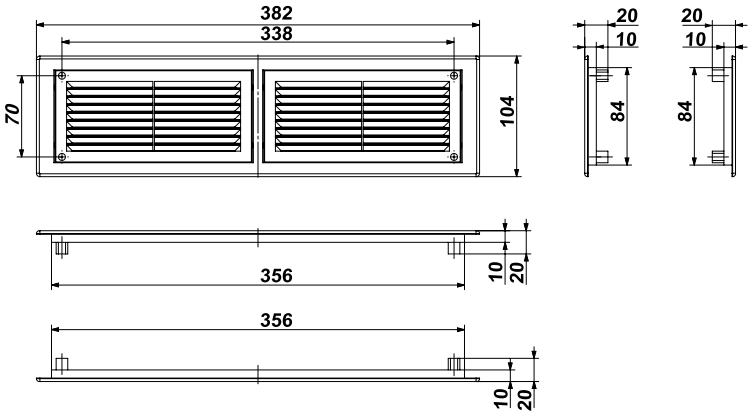

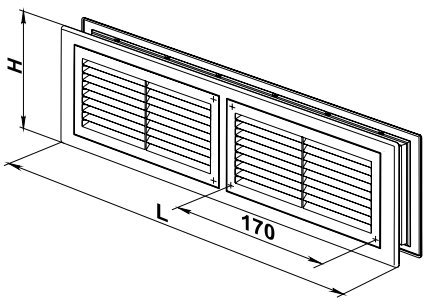







MV 430/2
Series



Application

- Mounting in door leaves of bathrooms, kitchens, etc.
- Used to arrange correct air circulation in premises.

Design

- The grille consists of two parts.
- Made of high quality plastic.
- Available in various colour modifications.
- The mating grille parts are connected by slots and fixed with screws.
- Required cutout area in door leaf for is 80x434 mm.
- Minimum door leaf thickness is 30 mm.
- Modifications with a protecting insect screen are available.

Colour modifications



Modifications

- **MV 430/2 s** – model with a protecting insect screen.

Overall dimensions

Model	Dimensions [mm]		Air pass, [m²]
	H	L	
MV 430/2	91	453	0.0152

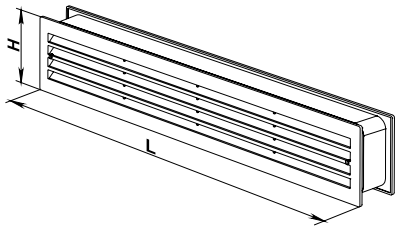

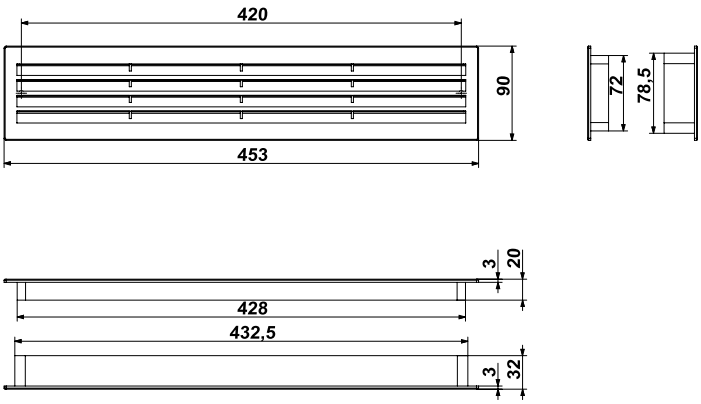



MV 440/2
Series



Application

- Mounting in door leaves of bathrooms, kitchens, etc.
- Used to arrange correct air circulation in premises.

Design

- The grille consists of two parts.
- Made of high quality white plastic.
- Available in various colour modifications.
- The mating grille parts are connected by slots and fixed with screws.
- Minimum door leaf thickness is 32 mm.
- Required cutout area in door leaf is 99x435 mm.
- Modifications with a protecting insect screen are available.

Colour modifications



Modifications

- **MV 440/2 s** – model with a protecting insect screen.

Overall dimensions

Model	Dimensions [mm]		Air pass, [m²]
	H	L	
MV 440/2	120	460	0.0152

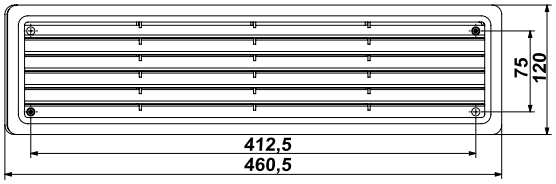

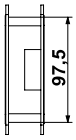

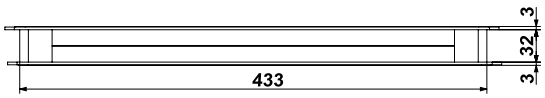

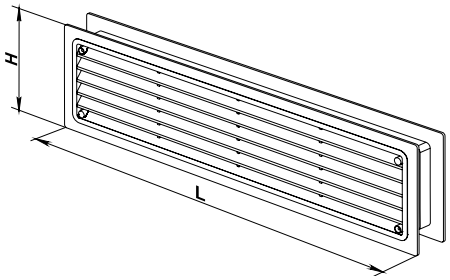



MV 240x60
Series

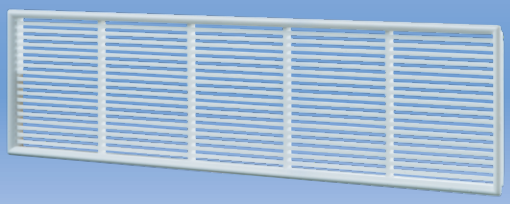

Application

- Mounting in door leaves of bathrooms, kitchens, etc.
- It is also designed for mounting in various pieces of furniture in order to ventilate them.
- Suitable for installation into windowsills for correct warm air distribution from radiators.

Design

- Made of high quality plastic.
- Available in various colour modifications.
- Fixing to surfaces with glue (not included in the delivery set).

Colour modifications

white brown

Overall dimensions

Model	Dimensions [mm]					
	h	h1	a	a1	b	c
MV 240x60	64	60	242	238	8	6

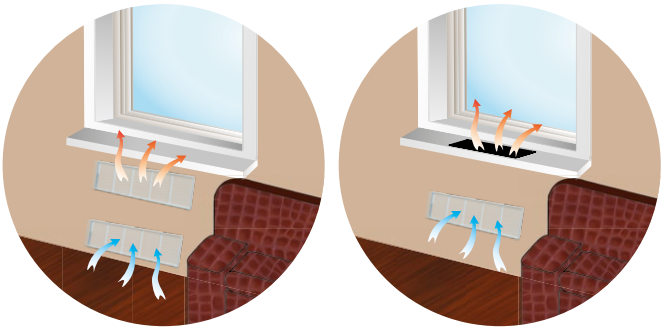

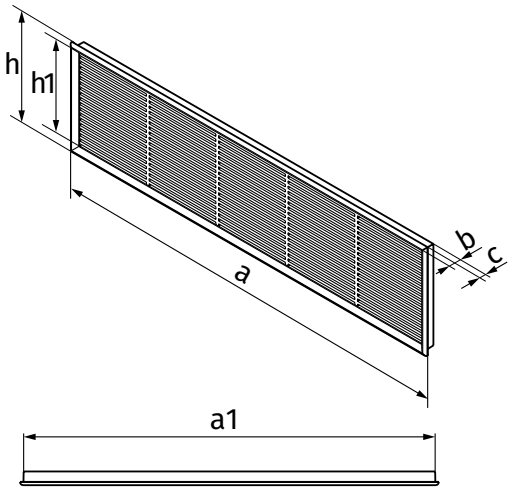

SUPPLY AND EXHAUST AIR DISK VALVES













Supply and exhaust plastic air disk valves
A…VR Series
page 270



Supply and exhaust plastic air disk valves
A…VRF Series
page 272



Supply plastic air disk valves
A…PR Series
page 274



Supply plastic air disk valves
A…PRF Series
page 276



Supply metal air disk valves
AM…PRF Series
page 278



Supply and exhaust metal air disk valves
AM…VRF Series
page 280



Supply and exhaust metal air disk valves
AM...VRF N Series
page 282



Supply and exhaust plastic diffusers
MV…PF Series
page 283



Supply and exhaust plastic diffusers with light
FL 100 Series
page 284



Supply and exhaust plastic diffusers with light
FL-2 100 Series
page 286

A...VR
Series



Application

- For supply and exhaust ventilation, air conditioning and heating.
- Mounting in false ceilings or walls.
- Used to arrange correct air circulation in premises.

Design

- Made of high quality plastic (ABS plastic or polystyrene).
- Special aerodynamic disk valve design ensures uniform air distribution.
- Smooth air pass regulation due to rotation of central part of the damper.
- Easy mounting with fixing lugs.
- The internal part has a sealing ring for more tight fit.

Grille modifications

A 80 VR, A 100 VR, A 125 VR, A 150 VR, A 200 R – basic modifications



- Equipped with fixing lugs for easy connection to Ø 80/100/125/150/200 mm round air ducts.
- Modification may include **F 80 – F 200** flange (available upon separate order).



A 200 VR – two-element model



- Equipped with fixing lugs for easy connection to Ø 200 mm round air ducts.
- Two regulating elements for more perfect air flow distribution.
- Modification may include **F 200** flange (available upon separate order).



Overall dimensions

Model	Dimensions [mm]								Air pass, [m²]	Fig. no.
	D	D1	D2	D3	H max	H1	H2	Damper normal pitch, mm		
A 80 VR	80	64	90	132	50	34	16	0...8	0...0.002	1
A 100 VR	100	84	90	148	65	44	26	0...20	0...0.006	1
A 125 VR	125	105	110	166	70	40	20	0...22	0...0.008	1
A 150 VR	150	125	128	200	80	50	30	0...23	0...0.009	1
A 200 R	200	177.6	183	246	80	53	33	0...16	0...0.009	1
A 200 VR	200	177.6	128	246	80	53	33	0...19	0.001...0.008	2

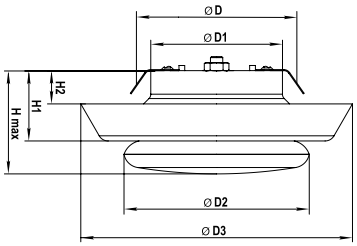

Fig. 1

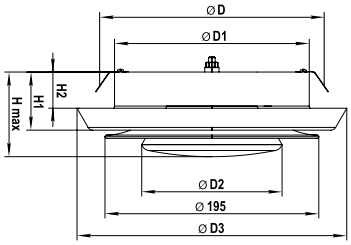

Fig. 2

Technical parameters

A 80 VR

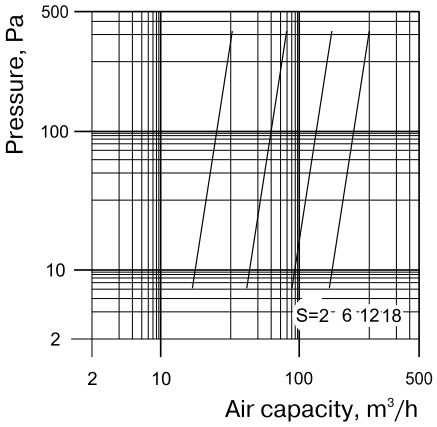

A 100 VR

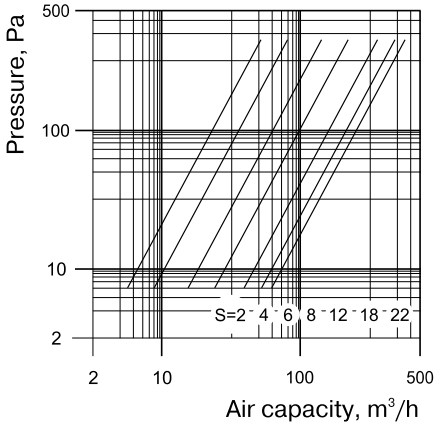

A 125 VR

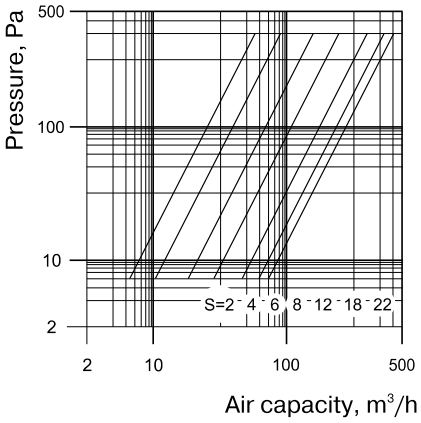

A 150 VR

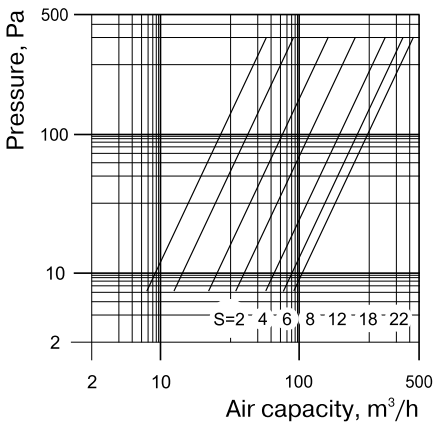

A 200 R

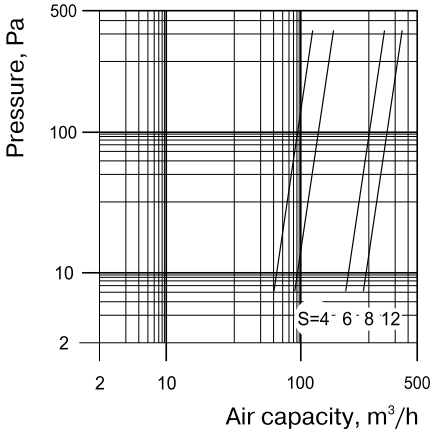

A 200 VR

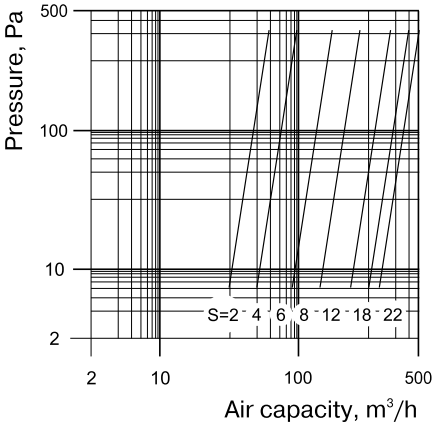

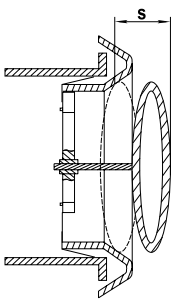

Fig. 3

The internal part of the air disk valve is pulled out to ensure the required clearance S (mm) (fig. 3) to provide required air flow according to the diagram.

A...VRF
Series



Application

- For supply and exhaust ventilation, air conditioning and heating.
- Mounting in false ceilings or walls.
- Used to arrange correct air circulation in premises.

Design

- Made of high quality plastic (ABS plastic or polystyrene).
- Special aerodynamic disk valve design ensures uniform air distribution.
- Smooth air pass regulation due to rotation of central part of the damper.
- Easy installation with fixing lugs and a mounting flange with a lock ring.
- The internal part has a sealing ring for more tight fit.

Grille modifications

A 80 VRF, A 100 VRF, A 125 VRF, A 150 VRF, A 200 RF – models with a mounting flange



- Equipped with a mounting flange and a lock ring for easy connection to round Ø 80/100/125 /150/200 mm air ducts.
- Mounting flange is fixed to false ceiling with screws.
- Lock ring provides easy fixing of the flexible air duct on a mounting flange.



A 200 VRF – double model with Ø 200 mm mounting flange



- Two regulating elements for more perfect air flow distribution.
- Equipped with a mounting flange and a lock ring for easy connection to round Ø 200 mm air ducts.
- Mounting flange is fixed to false ceiling with screws.
- Lock ring provides easy fixing of the flexible air duct on a mounting flange.



A 200/150 VRF – two-element model with a mounting flange



- Two regulating elements for more perfect air flow distribution.
- Equipped with a mounting reducing flange and a lock ring for easy connection to round Ø 150 mm air ducts.
- Mounting flange is fixed to false ceiling with screws.
- Lock ring provides easy fixing of the flexible air duct on a mounting flange.



Overall dimensions

Model	Dimensions [mm]					Air pass, [m²]	Damper normal pitch, mm	Fig. no.
	D	D1	D2	H	H1			
A 80 VRF	80	90	132	58	18	0...0.002	0...8	1
A 100 VRF	100	90	148	58	28	0...0.006	0...20	1
A 125 VRF	125	110	166	58	20	0...0.008	0...22	1
A 150 VRF	150	128	200	58	20	0...0.009	0...23	1
A 200 RF	200	183	246	58	20	0...0.009	0...16	1
A 200 VRF	200	128	246	58	20	0.001...0.008	0...19	2
A 200/150 VRF	150	128	246	82	20	0.001...0.008	0...19	3

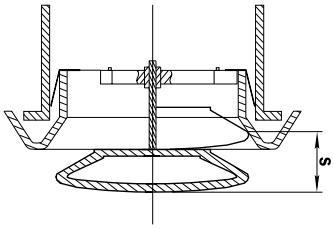

Fig. 4

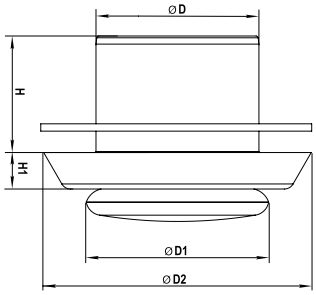

Fig. 1

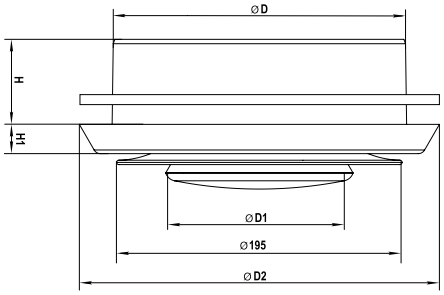

Fig. 2

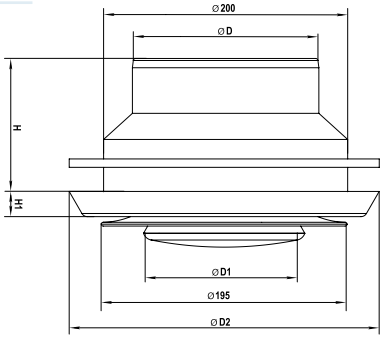

Fig. 3

Technical parameters

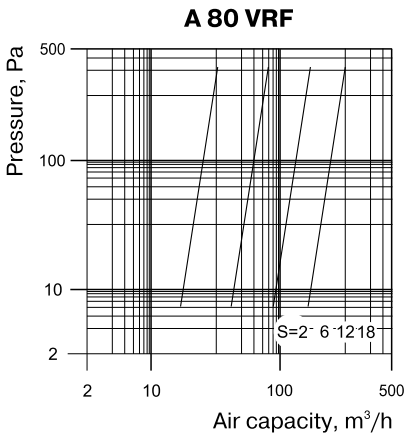

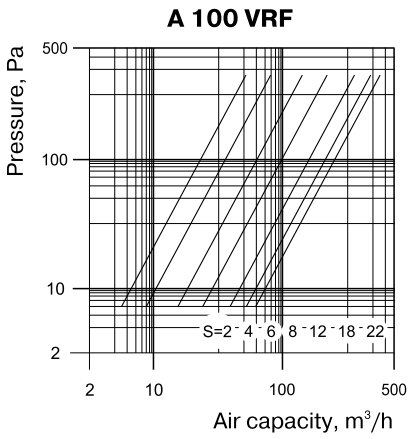

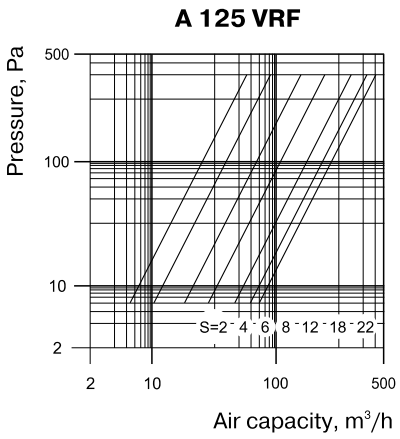

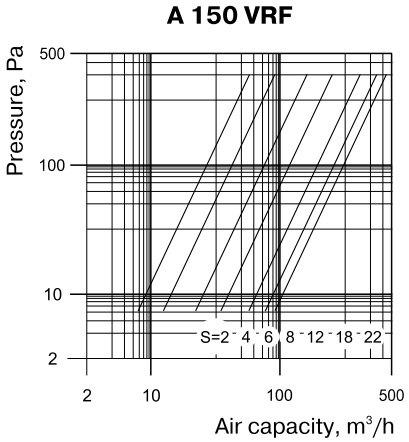

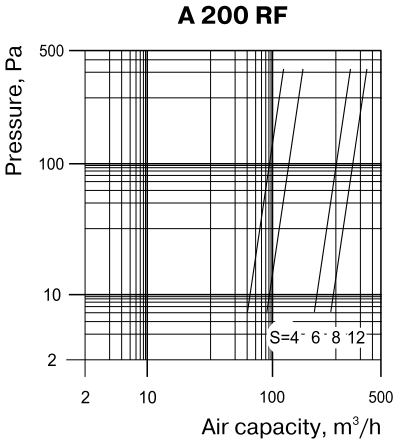

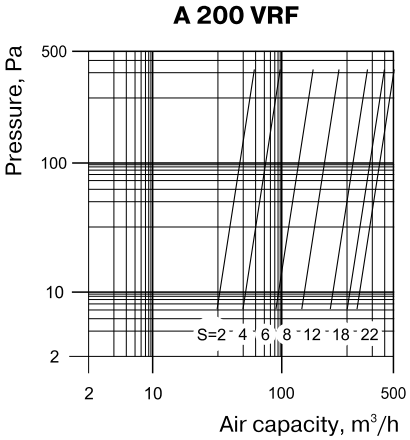

The internal part of the air disk valve is pulled out to ensure the required clearance S mm (fig. 4) to provide required air flow according to the diagram.

A...PR
Series



Application

- For supply ventilation, air conditioning and heating.
- Designed for wall mounting or installation into false ceiling.
- Used to arrange correct air supply and circulation in premises.

Design

- Made of high quality plastic (ABS plastic or polystyrene).
- Special aerodynamic disk valve design ensures uniform air distribution.
- Smooth air pass regulation due to rotation of central part of the damper.
- Easy mounting with fixing lugs.
- The internal part has a sealing ring for more tight fit.

Grille modifications

A 150 PR – basic modification



- Equipped with fixing lugs for easy connection with Ø 150 mm round air ducts.
- Modification may include **F 150** flange (available upon separate order).



A 200 PR – two-element models



- Equipped with fixing lugs for easy connection with Ø 200 mm round air ducts.
- Two regulating elements for more perfect air flow distribution.
- Modification may include **F 200** flange (available upon separate order).



Technical parameters

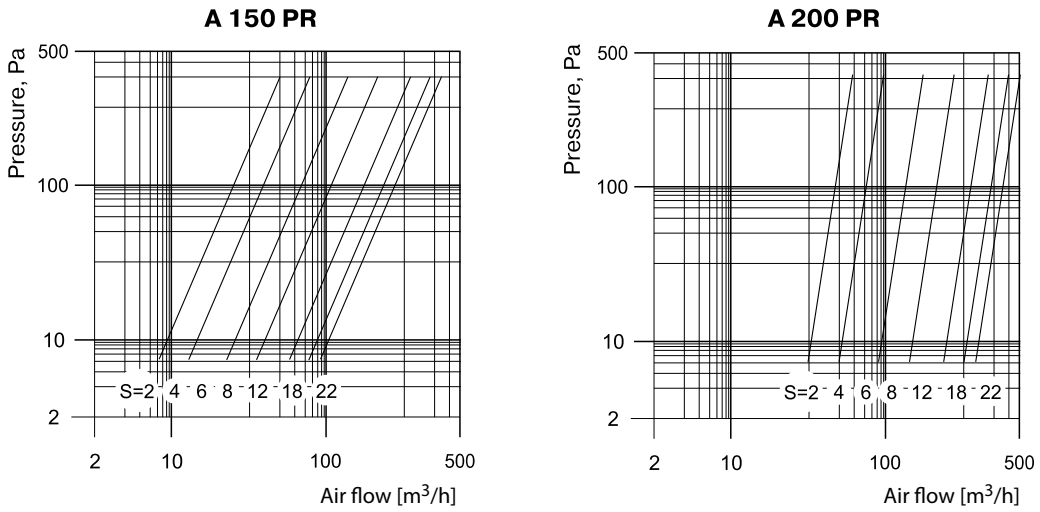

The internal part of the air disk valve is pulled out to ensure the required clearance S (mm) to provide required air flow according to the diagram.

Overall dimensions

Model	Dimensions [mm]							Air pass, [m²]	Damper normal pitch, [mm]	Fig. no.
	D	D1	D2	D3	H max	H1	H2			
A 150 PR	150	125	155	200	80.5	50	30	0...0.011	0...21	1
A 200 PR	200	177.6	155	246	80.5	53	33	0...0.012	0...21	2

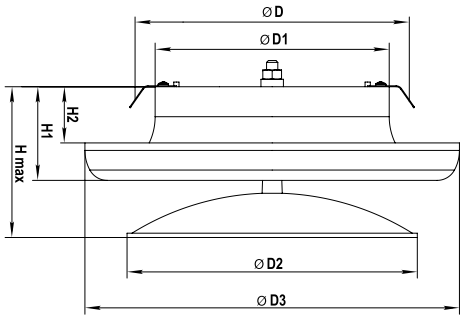

Fig. 1

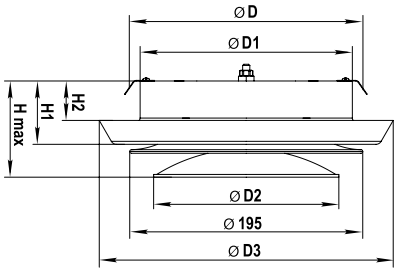

Fig. 2

A...PRF
Series



Application

- For supply ventilation, air conditioning and heating.
- Designed for wall mounting or installation into false ceiling.
- Used to arrange correct air supply and circulation in premises.

Design

- Made of high quality plastic (ABS plastic or polystyrene).
- Special aerodynamic disk valve design ensures uniform air distribution.
- Smooth air pass regulation due to rotation of central part of the damper.
- Easy mounting with fixing lugs.
- The internal part has a sealing ring for more tight fit.

Grille modifications

A 150 PRF – models with a mounting flange



- Equipped with a mounting flange and a lock ring for easy connection to round Ø 150 mm air ducts.
- Mounting flange is fixed to false ceiling with screws.
- Lock ring provides easy fixing of the flexible air duct on a mounting flange.



A 200 PRF – models with a mounting flange



- Equipped with a mounting flange and lock ring for easy connection to round Ø 200 mm air ducts.
- Two regulating elements for more perfect air flow distribution.
- Mounting flange is fixed to false ceiling with screws.
- Lock ring provides easy fixing of the flexible air duct on a mounting flange.



Technical parameters

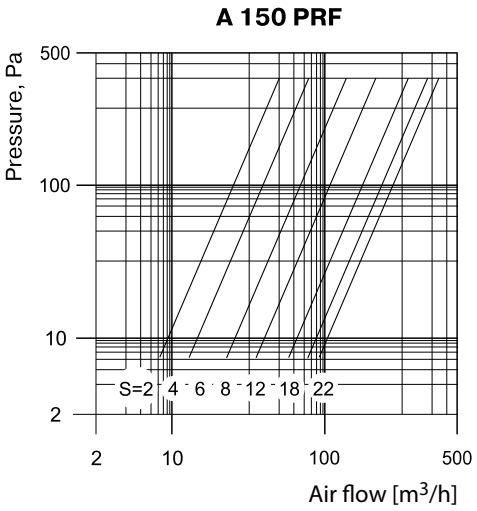

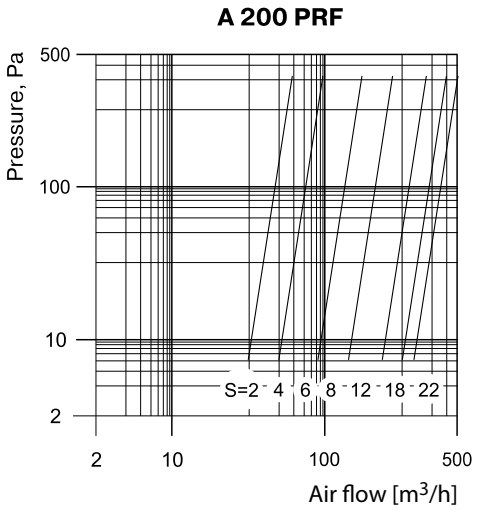

The internal part of the air disk valve is pulled out to ensure the required clearance S (mm) to provide required air flow according to the diagram.

Overall dimensions

Model	Dimensions [mm]						Damper normal pitch, [mm]	Air pass, [m²]	Fig. no.
	D	D1	D2	H max	H1	H2			
A 150 PRF	150	155	200	80.5	78	58	0...21	0...0.011	1
A 200 PRF	200	155	246	80.5	78	58	0...22	0...0.012	2

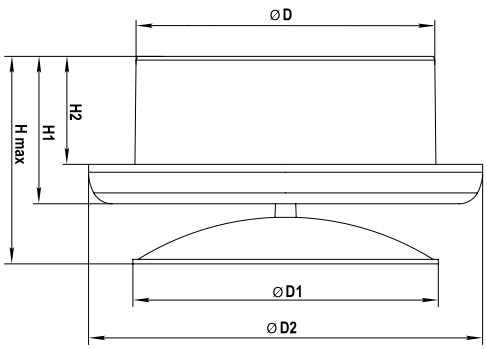

Fig. 1

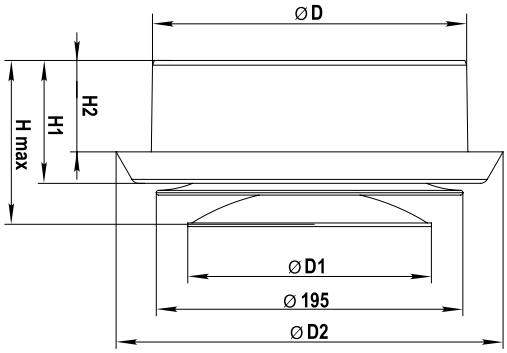

Fig. 2

AM...PRF
Series



Application

- For supply ventilation, air conditioning and heating.
- Designed for wall mounting or installation into false ceiling.
- Used to arrange correct air supply circulation in premises.

Design

- Made of polymer-coated steel.
- Special aerodynamic disk valve design ensures uniform air distribution.
- Smooth air pass regulation due to rotation of central part of the damper.
- Equipped with a mounting flange for easy connection to round Ø 100-200 mm air ducts.
- Mounting flange is fixed to false ceiling with screws.
- The internal part has a sealing ring for more tight fit.



Overall dimensions

Model	Dimensions [mm]			
	D	D1	D2	D3
AM 100 PRF	99	125	88	138
AM 125 PRF	124	150	112	167
AM 150 PRF	149	175	144	199
AM 200 PRF	199	225	200	249

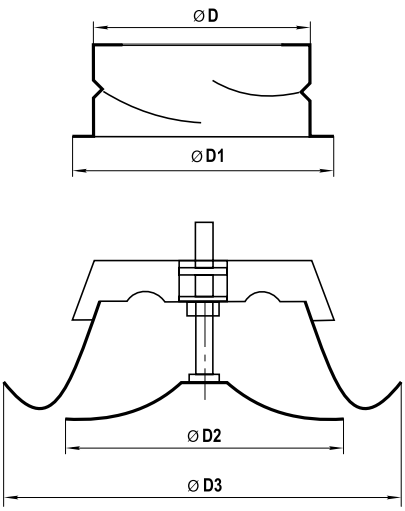

Technical parameters

AM 100 PRF

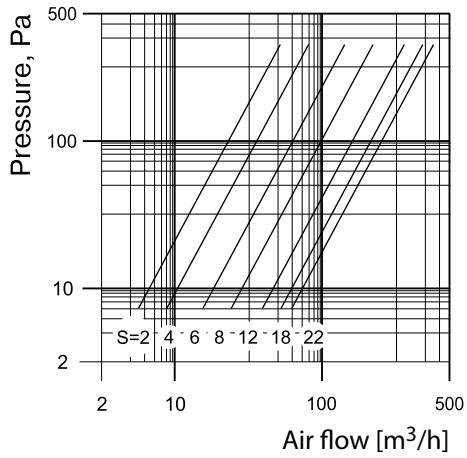

AM 125 PRF

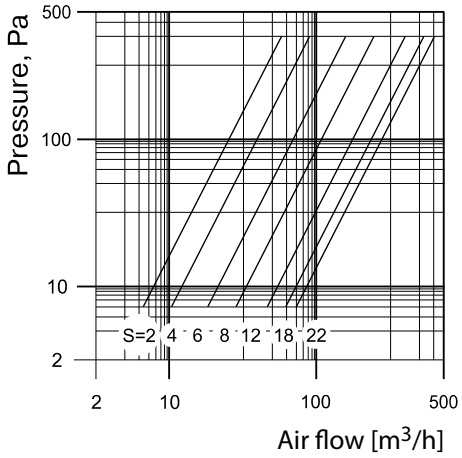

AM 150 PRF

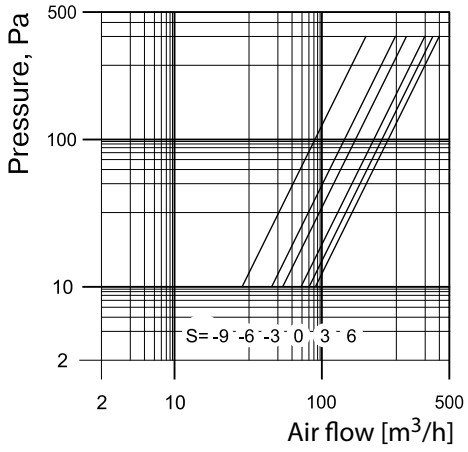

AM 200 PRF

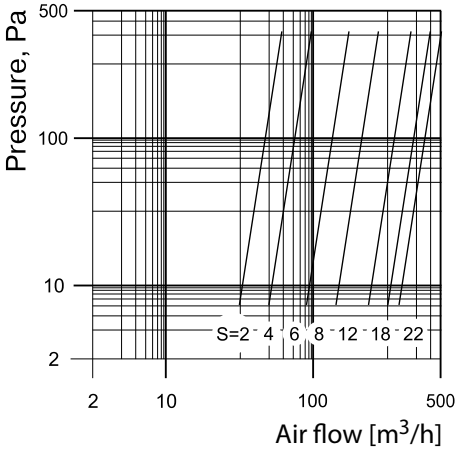

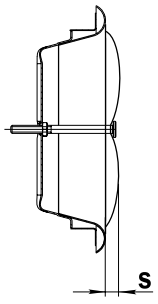

The internal part of the air disk valve is pulled out to ensure the required clearance S (mm) to provide required air flow according to the diagram.

AM...VRF
Series



Application

- For supply and exhaust ventilation, air conditioning and heating.
- Mounting in false ceilings or walls.
- Used to arrange correct air circulation in premises.

Design

- Made of polymer-coated steel.
- Special aerodynamic disk valve design ensures uniform air distribution.
- Smooth air pass regulation due to rotation of central part of the damper.
- Equipped with a mounting flange for easy connection to round Ø 100-200 mm air ducts.
- Mounting flange is fixed to false ceiling with screws.
- The internal part has a sealing ring for more tight fit.



Overall dimensions

Model	Dimensions [mm]			
	D	D1	D2	D3
AM 100 VRF	99	123	75	128
AM 125 VRF	124	152	100	154
AM 150 VRF	149	173	128	184
AM 200 VRF	199	225	178	235

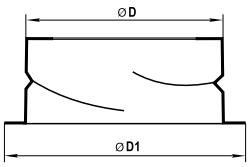

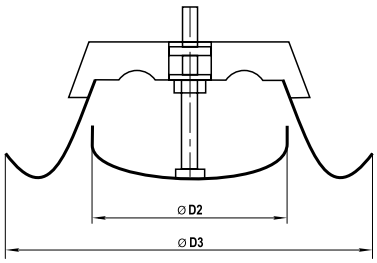

Technical parameters

AM 100 VRF

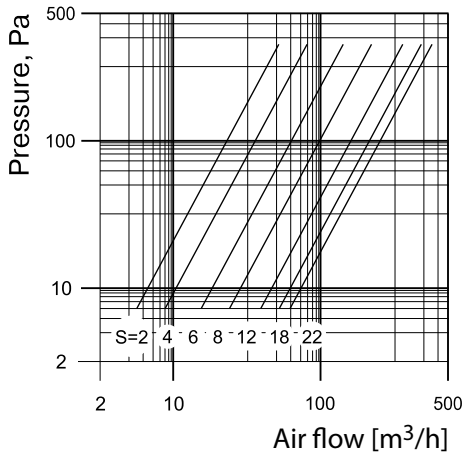

AM 125 VRF

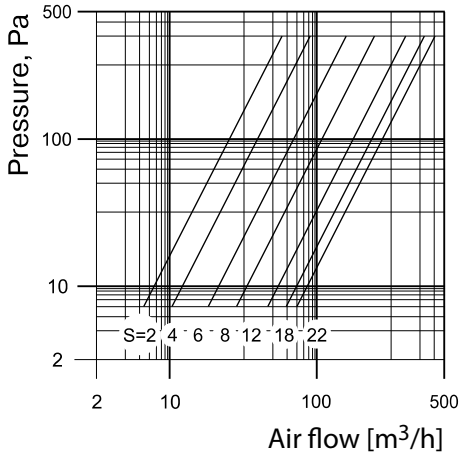

AM 150 VRF

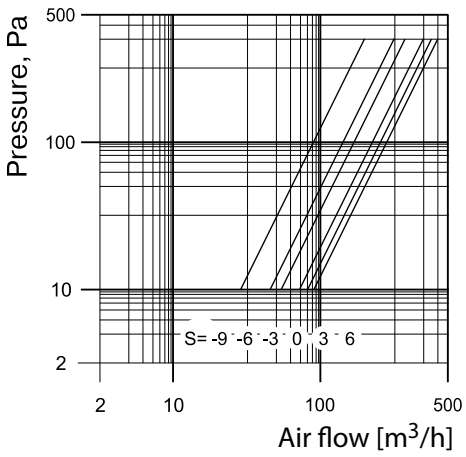

AM 200 VRF

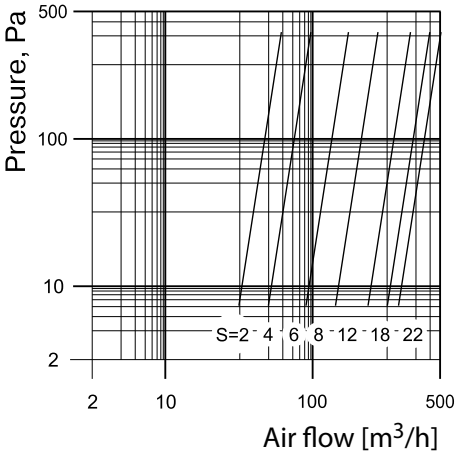

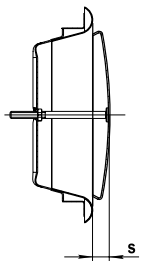

The internal part of the air disk valve is pulled out to ensure the required clearance S (mm) to provide required air flow according to the diagram.

AM...VRF N
Series



Application

- For supply and exhaust ventilation, air conditioning and heating.
- Mounting in false ceilings or walls.
- Used to arrange correct air circulation in premises.

Design

- Made of stainless steel.
- Special aerodynamic shape enables uniform air distribution.
- Smooth air flow control due to the central valve rotation.
- Equipped with a round Ø 100, 125 or 150 mm spigot for connection to air ducts.
- Easy mounting with fixing lugs or screws.



Overall dimensions

Model	Dimensions [mm]			Air pass, [m²]
	D	D1	L	
AM 100 VRF N	97	118	52	0.0032
AM 125 VRF N	120	141	52	0.0057
AM 150 VRF N	145	162	62	0.0090
AM 200 VRF N	195	214	73	0.0132

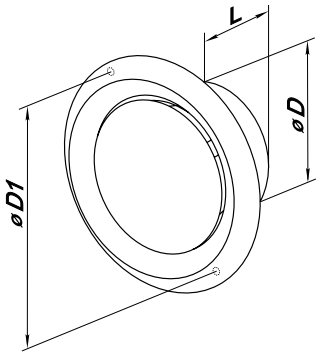

MV...PF
Series



Application

- For supply ventilation, air conditioning and heating.
- Designed for wall mounting or installation into false ceiling.
- Used to arrange correct air circulation in premises.

Design

- Made of high quality plastic (ABS plastic or polystyrene).
- Special aerodynamic disk valve design ensures uniform air distribution.
- Easy mounting with a mounting flange and a lock ring.
- The internal part has a sealing ring for more tight fit.
- Models with a built-in insect screen.

Diffuser modifications

MV 80 PF – MV 315 PF – basic modifications



- Equipped with mounting flanges with a lock ring for easy connection to round Ø 80-315 mm air ducts.
- **MV 80 PFs – MV 315 PFs** – models with a protecting insect screen.



MV 200/150 PF – model with Ø 150 mm reducing flange



- **MV 200/150 PF** – model equipped with a reducing flange for connection to Ø 150 mm air duct.
- **MV 200/150 PFs** – model with a protecting insect screen.



Overall dimensions

Model	Dimensions [mm]				Air pass, [m²]
	D	D1	H	H1	
MV 80 PF	80	123	70	12.5	0.004
MV 100 PF	100	141	71	12.5	0.006
MV 125 PF	125	166	72	14	0.010
MV 150 PF	150	188	72	15	0.014
MV 200 PF	200	240	72	14.5	0.025
MV 200/150 PF	150	240	99	14.5	0.025
MV 250 PF	250	294	78	20.5	0.039
MV 315 PF	315	371	82.5	25	0.062

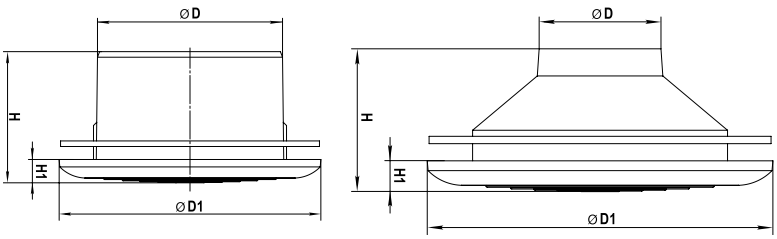

FL 100
Series

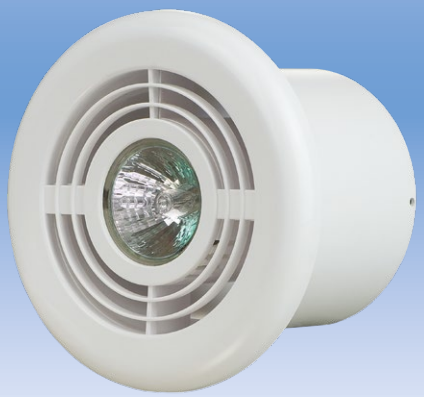

Application

- For supply and exhaust ventilation and air conditioning systems.
- For synchronous ventilation and backlighting of premises.
- Designed for a wall or suspended ceiling mounting.
- The best solution for use in exhaust systems of premises with high humidity, such as bathrooms and WCs, due to safe voltage 12 V.

Design

- Made of high quality plastic.
- The diffuser is supplied with a LED lamp with power demand from 1 to 7 W and light temperature from 3000 K (white warm) to 7000 K (white cold).
- Special aerodynamic shape ensures uniform air distribution.
- Easy mounting with a mounting flange and screws.
- External removable grille for technical maintenance and cleaning.
- Removable front panels are available in 3 colours: white, chrome and gold.
- IP rating is IPX4.

Colour modifications



white
FL 100 LED



chrome
FL 100 LED chrome



gold
FL 100 LED gold

Diffuser modifications

A model with a LED lamp 12 V/50 Hz: **FL 100 LED 3K (12 V/50 Hz)**



- A LED lamp (3 W).
- Safe lamp voltage: 12 V/50 Hz.
- Lamp cap: G5.3.
- Supplied with a terminal box.
- Available for order with lamps:
  3 W 3000 K – FL 100 LED 3K (12 V/50 Hz)
  3 W 7000 K – FL 100 LED 7K (12 V/50 Hz)
  4 W 7000 K – FL 100 LED4 7K (12 V/50 Hz)
  5 W 3000 K – FL 100 LED5 3K (12 V/50 Hz)
  5 W 7000 K – FL 100 LED5 7K (12 V/50 Hz)

A model with a LED lamp 12 V/50 Hz and a transformer unit 220-240/12 V: **FL-T 100 LED 3K**



- A LED lamp (3 W).
- The delivery set includes a 220-240/12 power unit for LED lamps.
- Safe lamp voltage: 12 V.
- White warm lightning colour.
- Lamp cap: G5.3.
- Supplied with a terminal box.
- Available for order with lamps:
  3 W 3000 K – FL-T 100 LED 3K
  3 W 7000 K – FL-T 100 LED 7K
  4 W 7000 K – FL-T 100 LED4 7K
  5 W 3000 K – FL-T 100 LED5 3K
  5 W 7000 K – FL-T 100 LED5 7K

A model with a LED lamp 220-240 V/50 Hz: **FL 100 LED 3K (220-240 V/50 V)**



- A LED lamp (3 W).
- Lamp supply voltage: 220-240 V/50 Hz.
- White warm lightning colour.
- Lamp cap: GU10.
- Supplied with a terminal box.

Overall dimensions

Model	Dimensions [mm]				Free area [m²]
	D	D1	L	L1	
FL 100	141	99.4	87.5	15	0.00302

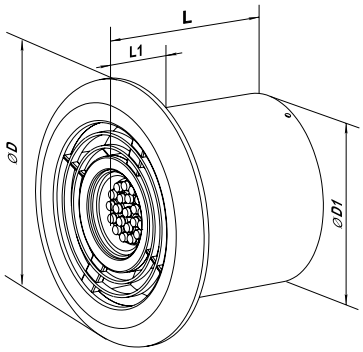

FL2-100
Series



Application

- For supply and exhaust ventilation and air conditioning systems.
- For synchronous ventilation and backlighting of premises.
- Designed for a wall or suspended ceiling mounting.
- The best solution for use in exhaust systems of premises with high humidity, such as bathrooms and WCs.

Design

- Made of high quality plastic.
- The diffuser is supplied with a LED lamp with power demand from 3 to 7 W and light temperature from 3000 K (white warm) to 7000 K (white cold).
- Special aerodynamic shape ensures uniform air distribution.
- Easy mounting with a mounting flange and screws.
- External removable grille for technical maintenance and cleaning.
- IP rating is IPX4.

Diffuser modifications

A model with a LED lamp 12 V/50 Hz FL2 100 LED 3K (12 V/50 Hz)

- A LED lamp (3 W).
- The delivery set includes a 100-240/12 V power unit for LED lamps.
- White warm lightning colour – 3000 K.
- Lamp cap: G5.3.
- Supplied with a terminal box.

The following modifications are available for order

Model	Lamp wattage, W	Light temperature, K	Power unit	Diffuser supply voltage, V/50 Hz
FL2 100 LED 3K (12 V/50 Hz)	3	3000	No	12
FL2 100 LED 7K (12 V/50 Hz)	3	7000	No	12
FL2 100 LED4 7K (12 V/50 Hz)	4	7000	No	12
FL2 100 LED4,6 4K (12 V/50 Hz)	4.6	4000	No	12
FL2 100 LED5 3K (12 V/50 Hz)	5	3000	No	12
FL2 100 LED5 7K (12 V/50 Hz)	5	7000	No	12

A model with a LED lamp and a transformer unit FL2-T 100 LED 3K

- A LED lamp (3 W).
- The delivery set includes a 100-240/12 V power unit for LED lamps.
- Safe lamp voltage: 12 V.
- White warm lightning colour – 3000 K.
- Lamp cap: G5.3.
- Supplied with a terminal box.

The following modifications are available for order

Model	Lamp wattage, W	Light temperature, K	Power unit	Diffuser supply voltage, V/50 Hz
FL2-T 100 LED 3K	3	3000	Yes	220-240
FL2-T 100 LED 7K	3	7000	Yes	220-240
FL2-T 100 LED4 7K	4	7000	Yes	220-240
FL2-T 100 LED4,6 4K	4.6	4000	Yes	220-240
FL2-T 100 LED5 3K	5	3000	Yes	220-240
FL2-T 100 LED5 7K	5	7000	Yes	220-240
FL2 100 LED 3K (220-240 V/50 Hz)	3	3000	No	220-240

Overall dimensions

Model	Dimensions [mm]				Free area [m²]
	D	D1	L	L1	
FL2-100	140	97	73.2	13.2	0.00302

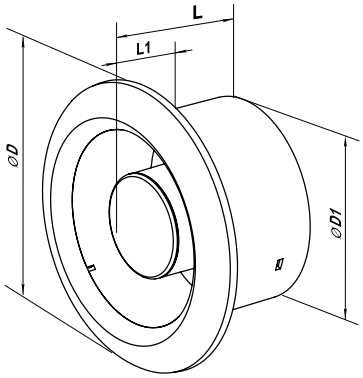

Additional equipment



chrome
FL2-100 chrome

SUPPLY AND EXHAUST METAL GRILLES









Supply and exhaust single-row metal grilles
MVM Series
MVMP Series
page 292



Supply and exhaust multiple-row metal grilles
MVMP Series
page 294



Supply and exhaust slot metal grilles
MVMP Series
page 296



Supply and exhaust single-row metal edge-raised grilles
MVMPO Series
page 297



Supply and exhaust multiple-row metal edge-raised grilles
MVMPO Series
page 298



Supply and exhaust metal slot edge-raised grilles
MVMPO Series
page 300



Supply and exhaust metal regulated grilles
MVMPO...R Series
page 301



Supply and exhaust regulated slot metal grilles

MVMPO...Rr Series
MVMPO...R Series

page 302



Supply and exhaust metal door grilles

MVM Series

page 303



Supply and exhaust metal door grilles

MVMP Series

page 304



Supply and exhaust metal door grilles

MVMA Series

page 305



Supply and exhaust metal grille

MVM-50 S A Series

page 306



Supply and exhaust metal grille

MVM...bV A Series

page 307



Supply and exhaust metal grille

MVM...bV N Series

page 308



Supply and exhaust metal grille

MVM...b N Series

page 309



Supply and exhaust metal hoods

MVM... bVs N / bV N Series

page 310



Exhaust gravity metal grille

MVM...VJ N Series

page 312



Exhaust metal hoods

MVM...V N Series

page 313



Supply and exhaust metal grille

MVM...bVL A Series

page 314



Supply and exhaust metal grille

MVM...VR N Series

page 315



Supply and exhaust metal grille

MVMP...R N / R A Series

page 316



Supply and exhaust metal grille

MVMO...b Series

page 318



Supply and exhaust metal grille

MVMO...bV Series

page 319



Supply and exhaust metal grille

MVMO…bS K1 Series

page 321

MVM
Series



Application

- Decoration of exhaust vents of public, residential and industrial ventilation systems.
- For supply ventilation and air conditioning.
- Used for correct air flow distribution in premises.
- Internal or external wall and ceiling mounting.

Design

- Made of steel, galvanized steel or aluminium and are suitable for colourful polymer painting.
- Screw fixing.
- Quality materials and zinc-phosphate treatment ensure coating integrity and provide reliable corrosion protection.
- Modifications with a protecting insect screen are available.

Modifications

- **MVM …** – basic steel models with white polymer coating.
- **MVM … s** – steel models with white polymer coating and a protecting insect screen.
- **MVM … A** – aluminium grille models with white polymer coating.
- **MVM … s A** – aluminium models with white polymer coating and protecting insect screen.
- **MVM … A** (**no**/**p**) – aluminium grille models.
- **MVM … s A** (**no**/**p**) – aluminium models with a protecting insect screen.
- **MVM … Zn** – galvanized steel grille models.
- **MVM … s Zn** – galvanized steel models with a protecting insect screen.
- **MVM … «colour code»** – colourful polymer painted models.

Colour modifications

white	brown	blue	beige	grey	black
RAL 9016	RAL 8017	RAL 5005	RAL 1015	RAL 7001	RAL 9005

Overall dimensions

Model	Dimensions [mm]			Air pass, [m²]
	▫L	▫h	A	
MVM 125	125	111	0.8	0.0035
MVM 150	150	136	0.8	0.0060
MVM 200	200	182	0.8	0.0117
MVM 250	250	234	0.8	0.0166
MVM 300	300	284	0.8	0.0249

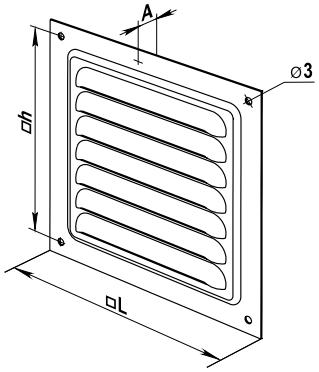

MVMP
Series



Application

- Decoration of exhaust vents of public, residential and industrial ventilation systems.
- For ventilation, air conditioning and heating.
- Used for correct air flow distribution in premises.
- Internal or external wall and ceiling mounting.

Design

- Made of steel, galvanized steel or aluminium and are suitable for colourful polymer painting.
- Screw fixing.
- Quality materials and zinc-phosphate treatment ensure coating integrity and provide reliable corrosion protection.
- Modifications with a protecting insect screen are available.

Modifications

- **MVMP ...** – basic steel models with white polymer coating.
- **MVMP ...s** – steel models with white polymer coating and a protecting insect screen.
- **MVMP ... A** – aluminium grille models with white polymer coating.
- **MVMP ... s A** – aluminium models with white polymer coating and protecting insect screen.
- **MVMP ... A** (**no**/**p**) – aluminium grille models.
- **MVMP ... s A** (**no**/**p**) – aluminium models with a protecting insect screen.
- **MVMP ...Zn** – galvanized steel grille models.
- **MVMP ... s Zn** – galvanized steel models with a protecting insect screen.
- **MVMP ... «colour code»** – colourful polymer painted models.

Colour modifications

white
RAL 9016

brown
RAL 8017

blue
RAL 5005

beige
RAL 1015

grey
RAL 7001

black
RAL 9005

Overall dimensions

Model	Dimensions [mm]					Air pass, [m²]
	L	H	l	h	A	
MVMP 70	70	70	56	56	0.8	0.0009
MVMP 70x140	70	140	56	126	0.8	0.0018
MVMP 100	100	100	86	86	0.8	0.0018
MVMP 100x200	100	200	86	186	0.8	0.0050
MVMP 100x300	100	300	86	288	0.8	0.0081
MVMP 125	125	125	111	111	0.8	0.0028
MVMP 130x90	130	90	116	76	0.8	0.0019
MVMP 130x170	130	170	116	156	0.8	0.0045
MVMP 140	140	140	126	126	0.8	0.0036
MVMP 150	150	150	136	136	0.8	0.0036
MVMP 150x200	150	200	136	186	0.8	0.0054
MVMP 150x210	150	210	136	196	0.8	0.0054
MVMP 150x215	150	215	136	201	0.8	0.0059
MVMP 150x250	150	250	136	236	0.8	0.0069
MVMP 150x300	150	300	136	286	0.8	0.0081
MVMP 150x350	150	350	136	336	0.8	0.0096
MVMP 155	155	155	141	141	0.8	0.0044
MVMP 170	170	170	156	156	0.8	0.0053
MVMP 175	175	175	161	161	0.8	0.0045
MVMP 175x250	175	250	161	236	0.8	0.0068
MVMP 180x90	180	90	166	76	0.8	0.0030
MVMP 180x250	180	250	166	236	0.8	0.0083
MVMP 190x170	190	170	176	156	0.8	0.0059

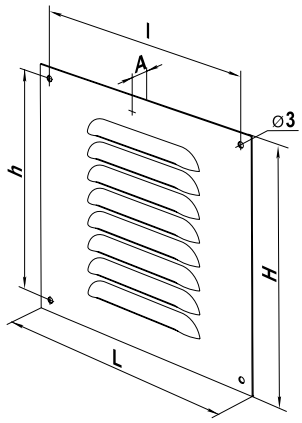

MVMP
Series



Application

- Decoration of exhaust vents of public, residential and industrial ventilation systems.
- For ventilation, air conditioning and heating.
- Used for correct air flow distribution in premises.
- Internal or external wall and ceiling mounting.

Design

- Made of polymer-coated, galvanized steel or aluminium.
- Screw fixing.
- Quality materials and zinc-phosphate treatment ensure coating integrity and provide reliable corrosion protection.
- Modifications with a protecting insect screen are available.

Modifications

- **MVMP …** – basic steel models with white polymer coating.
- **MVMP … s** – steel models with white polymer coating and a protecting insect screen.
- **MVMP … A** – aluminium grille models with white polymer coating.
- **MVMP … s A** – aluminium models with white polymer coating and protecting insect screen.
- **MVMP … A** (**no**/**p**) – aluminium grille models.
- **MVMP … s A** (**no**/**p**) – aluminium models with a protecting insect screen.
- **MVMP … Zn** – galvanized steel grille models.
- **MVMP … s Zn** – galvanized steel models with a protecting insect screen.
- **MVMP … «colour code»** – colourful polymer painted models.

Colour modifications

white RAL 9016	brown RAL 8017	blue RAL 5005	beige RAL 1015	grey RAL 7001	black RAL 9005

Overall dimensions

Model	Dimensions [mm]					Air pass, [m²]	Number of rows
	L	H	l	h	A		
MVMP 195/2	195	195	181	181	0.8	0.0070	2
MVMP 195x245/2	195	245	181	231	0.8	0.0088	2
MVMP 200x100/2	200	100	186	186	0.8	0.0036	2
MVMP 200/2	200	200	186	186	0.8	0.0099	2
MVMP 200x250/2	200	250	186	238	0.8	0.0093	2
MVMP 200x300/2	200	300	186	286	0.8	0.0162	2
MVMP 200x350/2	200	350	186	336	0.8	0.0129	2
MVMP 200x405/2	200	405	186	391	0.8	0.0149	2
MVMP 215x150/2	215	150	201	136	0.8	0.0059	2
MVMP 240/2	240	240	226	226	0.8	0.0126	2
MVMP 240x140/2	240	140	226	126	0.8	0.0063	2
MVMP 240x190/2	240	190	226	176	0.8	0.0099	2
MVMP 245x195/2	245	195	231	181	0.8	0.0088	2
MVMP 250/2	250	250	236	236	0.8	0.0135	2
MVMP 250x80/2	250	80	236	66	0.8	0.0037	2
MVMP 250x110/2	250	110	236	96	0.8	0.0051	2
MVMP 250x140/2	250	140	236	126	0.8	0.0064	2
MVMP 250x150/2	250	150	236	136	0.8	0.0069	2
MVMP 250x170/2	250	170	236	156	0.8	0.0078	2
MVMP 250x200/2	250	200	236	186	0.8	0.0092	2
MVMP 250x300/2	250	300	236	286	0.8	0.0171	2
MVMP 250x350/2	250	350	236	336	0.8	0.0161	2
MVMP 250x400/2	250	400	236	386	0.8	0.0184	2
MVMP 250x450/2	250	450	236	436	0.8	0.0207	2
MVMP 250x500/2	250	500	236	486	0.8	0.0230	2

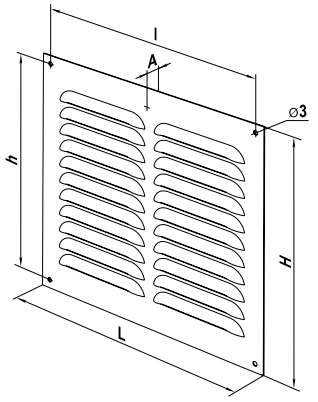

Model	Dimensions [mm]					Air pass, [m²]	Number of rows
	L	H	l	h	A		
MVMP 300x100/3	300	100	286	86	0.8	0.0054	3
MVMP 300x210/3	300	210	286	196	0.8	0.0162	3
MVMP 300x250/3	300	250	286	236	0.8	0.0189	3
MVMP 300x290/3	300	290	286	276	0.8	0.0230	3
MVMP 300/3	300	300	286	286	0.8	0.0243	3
MVMP 305x150/3	305	150	291	136	0.8	0.0084	3
MVMP 305x200/3	305	200	291	186	0.8	0.0112	3
MVMP 305x250/3	305	250	291	236	0.8	0.0140	3
MVMP 305x300/3	305	300	291	286	0.8	0.0168	3
MVMP 305x350/3	305	350	291	336	0.8	0.0196	3
MVMP 305x400/3	305	400	291	386	0.8	0.0224	3
MVMP 305x450/3	305	450	291	436	0.8	0.0252	3
MVMP 305x500/3	305	500	291	486	0.8	0.0280	3
MVMP 350x150/3	350	150	336	136	0.8	0.0096	3
MVMP 350x200/3	350	200	336	186	0.8	0.0129	3
MVMP 350x250/3	350	250	336	236	0.8	0.0161	3
MVMP 350x300/3	350	300	336	286	0.8	0.0193	3
MVMP 350/3	350	350	336	336	0.8	0.0225	3
MVMP 350x400/3	350	400	336	386	0.8	0.0257	3
MVMP 350x450/3	350	450	336	436	0.8	0.0289	3
MVMP 350x500/3	350	500	336	486	0.8	0.0321	3
MVMP 360x140/3	360	140	346	126	0.8	0.0093	3
MVMP 360x180/3	360	180	346	166	0.8	0.0119	3

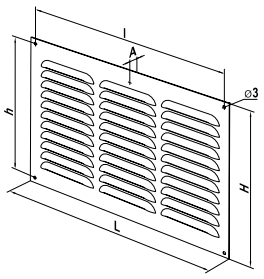

Model	Dimensions [mm]					Air pass, [m²]	Number of rows
	L	H	l	h	A		
MVMP 400x200/4	400	200	386	186	0.8	0.0147	4
MVMP 400x250/4	400	250	436	236	0.8	0.0184	4
MVMP 400x300/4	400	300	386	286	0.8	0.0324	4
MVMP 400x350/4	400	350	386	336	0.8	0.0257	4
MVMP 400/4	400	400	386	386	0.8	0.0294	4
MVMP 400x450/4	400	450	386	436	0.8	0.0331	4
MVMP 400x500/4	400	500	386	486	0.8	0.0367	4
MVMP 450x250/4	450	250	436	236	0.8	0.0207	4
MVMP 450x300/4	450	300	436	286	0.8	0.0248	4
MVMP 450x350/4	450	350	436	336	0.8	0.0289	4
MVMP 450x400/4	450	400	436	386	0.8	0.0331	4
MVMP 450/4	450	450	436	436	0.8	0.0372	4
MVMP 450x500/4	450	500	436	486	0.8	0.0413	4

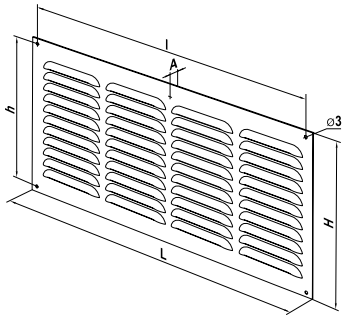

Model	Dimensions [mm]					Air pass, [m²]	Number of rows
	L	H	l	h	A		
MVMP 500x250/5	500	250	486	236	0.8	0.0236	5
MVMP 500x300/5	500	300	486	286	0.8	0.0276	5
MVMP 500x350/5	500	350	486	336	0.8	0.0321	5
MVMP 500x400/5	500	400	486	386	0.8	0.0367	5
MVMP 500x450/5	500	450	486	436	0.8	0.0413	5
MVMP 500/5	500	500	486	486	0.8	0.0459	5

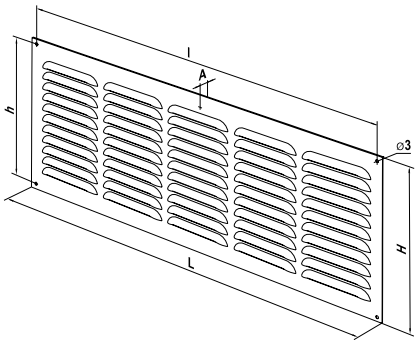

MVMP
Series

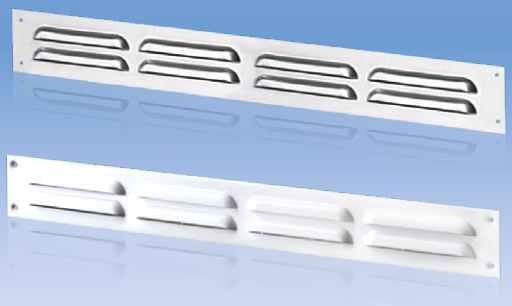

Application

- Decoration of exhaust vents of public, residential and industrial ventilation systems.
- For ventilation, air conditioning and heating.
- Used for correct air flow distribution in premises.
- Internal or external wall and ceiling mounting.

Design

- Made of steel, galvanized steel or aluminium and are suitable for colourful polymer painting.
- Screw fixing.
- Quality materials and zinc-phosphate treatment ensure coating integrity and provide reliable corrosion protection.
- Modifications with a protecting insect screen are available.

Modifications

- **MVMP …** – basic steel models with white polymer coating.
- **MVMP … s** – steel models with white polymer coating and a protecting insect screen.
- **MVMP … A** – aluminium grille models with white polymer coating.
- **MVMP … s A** – aluminium models with white polymer coating and protecting insect screen.
- **MVMP … A** (**no**/**p**) – aluminium grille models.
- **MVMP … s A** (**no**/**p**) – aluminium models with a protecting insect screen.
- **MVMP … Zn** – galvanized steel grille models.
- **MVMP … s Zn** – galvanized steel models with a protecting insect screen.
- **MVMP … «colour code»** – colourful polymer painted models.

Colour modifications

white RAL 9016	brown RAL 8017	blue RAL 5005	beige RAL 1015	grey RAL 7001	black RAL 9005

Overall dimensions

Model	Dimensions [mm]					Air pass, [m²]	Number of sections
	L	H	l	h	A		
MVMP 305x40/3	305	40	291	26	0.8	0.0022	3
MVMP 305x90/3	305	90	291	76	0.8	0.0050	3
MVMP 305x100/3	305	100	291	86	0.8	0.0056	3
MVMP 370x40/3	370	40	356	26	0.8	0.0027	3
MVMP 400x40/4	400	40	386	26	0.8	0.0029	4
MVMP 475x85/4	475	85	461	71	0.8	0.0074	4
MVMP 495x63/4	495	63	481	49	0.8	0.0057	4
MVMP 500x40/5	500	40	486	26	0.8	0.0037	5
MVMP 500x60/5	500	60	486	46	0.8	0.0055	5
MVMP 500x90/5	500	90	486	76	0.8	0.0083	5
MVMP 650x70/7	650	70	636	56	0.8	0.0084	7
MVMP 650x100/7	650	100	636	86	0.8	0.0119	7

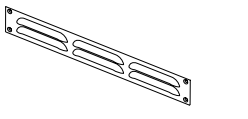

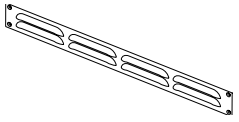

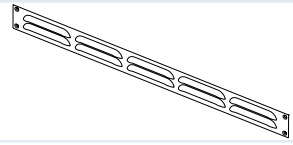

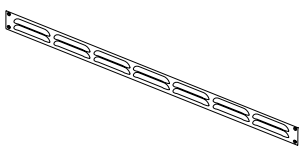

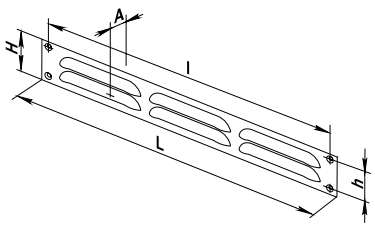

MVMPO
Series



Application

- Decoration of exhaust vents of public, residential and industrial ventilation systems.
- For ventilation, air conditioning and heating.
- Used for correct air flow distribution in premises.
- Internal or external wall and ceiling mounting.

Design

- Made of steel, galvanized steel or aluminium and are suitable for colourful polymer painting.
- Edge-raised grille design.
- Screw fixing.
- Quality materials and zinc-phosphate treatment ensure coating integrity and provide reliable corrosion protection.
- Modifications with a protecting insect screen are available.

Modifications

- **MVMPO …** – basic steel models with white polymer coating.
- **MVMPO … s** – steel models with white polymer coating and a protecting insect screen.
- **MVMPO … A** – aluminium grille models with white polymer coating.
- **MVMPO … s A** – aluminium models with white polymer coating and protecting insect screen.
- **MVMPO … A** (**no**/**p**) – aluminium grille models.
- **MVMPO … s A** (**no**/**p**) – aluminium models with a protecting insect screen.
- **MVMPO …Zn** – galvanized steel grille models.
- **MVMPO … s Zn** – galvanized steel models with a protecting insect screen.
- **MVMPO … «colour code»** – colourful polymer painted models.

Colour modifications

white	brown	blue	beige	grey	black
RAL 9016	RAL 8017	RAL 5005	RAL 1015	RAL 7001	RAL 9005

Overall dimensions

Model	Dimensions [mm]					Air pass, [m²]
	L	H	l	h	A	
MVMPO 70x140	70	140	56	126	5.5	0.0018
MVMPO 100	100	100	86	86	5.5	0.0018
MVMPO 100x200	100	200	86	186	5.5	0.0050
MVMPO 100x300	100	302	86	288	5.5	0.0086
MVMPO 125	125	125	111	111	5.5	0.0033
MVMPO 130x170	130	170	116	156	5.5	0.0045
MVMPO 130x90	130	90	116	76	5.5	0.0018
MVMPO 140	140	140	126	126	5.5	0.0036
MVMPO 140x180	140	180	126	166	5.5	0.0045
MVMPO 140x240	140	240	126	226	5.5	0.0063
MVMPO 150	150	150	136	136	5.5	0.0036
MVMPO 150x210	150	210	136	196	5.5	0.0054
MVMPO 150x215	150	215	136	201	5.5	0.0059
MVMPO 155	155	155	141	141	5.5	0.0041

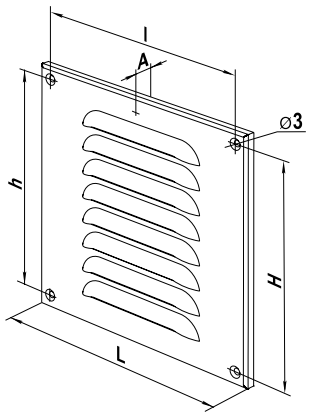

MVMPO
Series



Application

- Decoration of exhaust vents of public, residential and industrial ventilation systems.
- For ventilation, air conditioning and heating.
- Used for correct air flow distribution in premises.
- Internal or external wall and ceiling mounting.

Design

- Made of steel, galvanized steel or aluminium and are suitable for colourful polymer painting.
- Edge-raised grille design.
- Screw fixing.
- Quality materials and zinc-phosphate treatment ensure coating integrity and provide reliable corrosion protection.
- Modifications with a protecting insect screen are available.

Modifications

- **MVMPO …** – basic steel models with white polymer coating.
- **MVMPO … A** – aluminium grille models with white polymer coating.
- **MVMPO … s A** – aluminium models with white polymer coating and protecting insect screen.
- **MVMPO … A** (**no**/**p**) – aluminium grille models.
- **MVMPO … s A** (**no**/**p**) – aluminium models with a protecting insect screen.
- **MVMPO … Zn** – galvanized steel grille models.
- **MVMPO … s** – steel models with white polymer coating and a protecting insect screen.
- **MVMPO … s Zn** – galvanized steel models with a protecting insect screen.
- **MVMPO «colour code»** – colourful polymer painted models.

Colour modifications

white RAL 9016	brown RAL 8017	blue RAL 5005	beige RAL 1015	grey RAL 7001	black RAL 9005

Overall dimensions

Model	Dimensions [mm]					Air pass, [m²]	Number of rows
	L	H	l	h	A		
MVMPO 150x250/2	150	250	136	236	5.5	0.0068	2
MVMPO 150x350/2	150	350	136	336	5.5	0.0104	2
MVMPO 180x250/2	180	250	166	236	5.5	0.0068	2
MVMPO 195x245/2	195	245	181	231	5.5	0.0135	2
MVMPO 200/2	200	200	186	186	5.5	0.0099	2
MVMPO 200x100/2	200	100	186	86	5.5	0.0036	2
MVMPO 200x250/2	200	252	186	238	5.5	0.0135	2
MVMPO 200x300/2	200	300	186	286	5.5	0.0162	2
MVMPO 200x350/2	200	350	186	336	5.5	0.0199	2
MVMPO 200x405/2	200	405	186	391	5.5	0.0235	2
MVMPO 215x150/2	215	150	201	136	5.5	0.0072	2
MVMPO 225x150/2	225	150	211	136	5.5	0.0072	2
MVMPO 225/2	225	225	211	211	5.5	0.0117	2
MVMPO 240/2	240	240	226	226	5.5	0.0126	2
MVMPO 240x165/2	240	165	226	151	5.5	0.0081	2
MVMPO 240x195/2	240	195	231	181	5.5	0.0099	2
MVMPO 250/2	250	250	236	236	5.5	0.0135	2
MVMPO 250x110/2	250	110	236	96	5.5	0.0045	2
MVMPO 250x140/2	250	140	236	126	5.5	0.0072	2
MVMPO 250x150/2	250	150	236	136	5.5	0.0072	2
MVMPO 250x170/2	250	170	236	156	5.5	0.0090	2
MVMPO 250x200/2	250	200	236	186	5.5	0.0108	2
MVMPO 250x300/2	250	300	236	286	5.5	0.0162	2
MVMPO 250x350/2	250	350	236	336	5.5	0.0208	2
MVMPO 250x400/2	250	400	236	386	5.5	0.0235	2
MVMPO 250x450/2	250	450	236	436	5.5	0.0271	2
MVMPO 250x500/2	250	500	236	486	5.5	0.0298	2

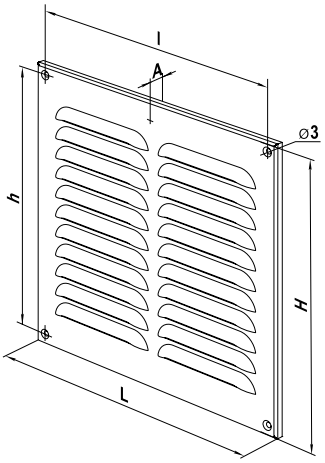

Model	Dimensions [mm]					Air pass, [m²]	Number of rows
	L	H	l	h	A		
MVMPO 300/3	300	300	286	286	5.5	0.0243	3
MVMPO 305x100/3	305	100	291	86	5.5	0.0068	3
MVMPO 305x150/3	305	150	291	136	5.5	0.0108	3
MVMPO 305x350/3	305	350	291	336	5.5	0.0311	3
MVMPO 305x400/3	305	400	291	386	5.5	0.0352	3
MVMPO 305x450/3	305	450	291	436	5.5	0.0406	3
MVMPO 305x500/3	305	500	291	486	5.5	0.0447	3
MVMPO 350x200/3	350	200	336	186	5.5	0.0162	3
MVMPO 350x250/3	350	250	336	236	5.5	0.0203	3
MVMPO 350x300/3	350	300	336	286	5.5	0.0257	3
MVMPO 350/3	350	350	336	336	5.5	0.0311	3
MVMPO 350x400/3	350	400	336	386	5.5	0.0352	3
MVMPO 350x450/3	350	450	336	436	5.5	0.0406	3
MVMPO 350x500/3	350	500	336	486	5.5	0.0447	3
MVMPO 360x140/3	360	140	346	126	5.5	0.0108	3
MVMPO 360x180/3	360	180	346	166	5.5	0.0135	3

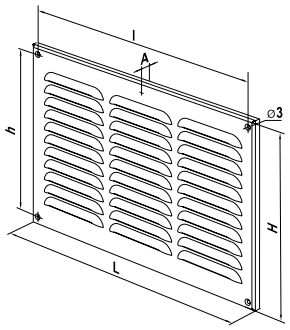

Model	Dimensions [mm]					Air pass, [m²]	Number of rows
	L	H	l	h	A		
MVMPO 400/4	400	400	386	386	5.5	0.0270	4
MVMPO 400x200/4	400	200	386	186	5.5	0.0217	4
MVMPO 400x250/4	400	250	386	236	5.5	0.0468	4
MVMPO 400x300/4	400	300	386	286	5.5	0.0325	4
MVMPO 400x350/4	400	350	386	336	5.5	0.0415	4
MVMPO 400x450/4	400	450	386	436	5.5	0.0541	4
MVMPO 400x500/4	400	500	386	486	5.5	0.0596	4
MVMPO 450x250/4	450	250	436	236	5.5	0.0271	4
MVMPO 450x300/4	450	300	436	286	5.5	0.0343	4
MVMPO 450x350/4	450	350	436	336	5.5	0.0415	4
MVMPO 450x400/4	450	400	436	386	5.5	0.0469	4
MVMPO 450/4	450	450	436	436	5.5	0.0541	4
MVMPO 450x500/4	450	500	436	486	5.5	0.0596	4

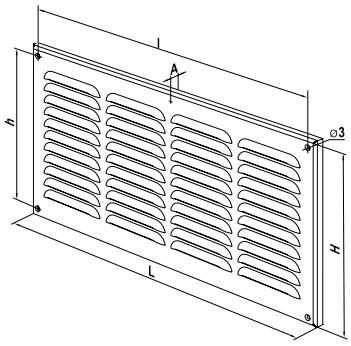

Model	Dimensions [mm]					Air pass, [m²]	Number of rows
	L	H	l	h	A		
MVMPO 500x250/5	500	250	486	236	5.5	0.0338	5
MVMPO 500x300/5	500	300	486	286	5.5	0.0429	5
MVMPO 500x350/5	500	350	486	336	5.5	0.0519	5
MVMPO 500x400/5	500	400	486	386	5.5	0.0587	5
MVMPO 500x450/5	500	450	486	436	5.5	0.0677	5

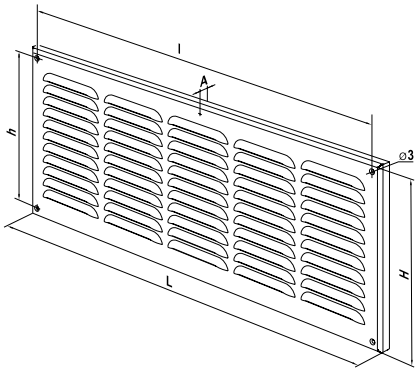

MVMPO
Series

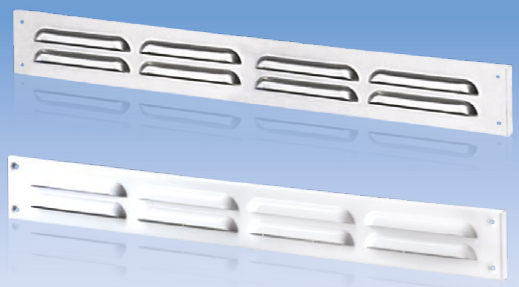

Application

- Decoration of exhaust vents of public, residential and industrial ventilation systems.
- For ventilation, air conditioning and heating.
- Used for correct air flow distribution in premises.
- Internal or external wall and ceiling mounting.

Design

- Made of steel, galvanized steel or aluminium and are suitable for colourful polymer painting.
- Edge-raised grille design.
- Screw fixing.
- Quality materials and zinc-phosphate treatment ensure coating integrity and provide reliable corrosion protection.
- Models with insect screen are available.

Modifications

- **MVMPO …** – basic steel models with white polymer coating.
- **MVMPO … s** – steel models with white polymer coating and a protecting insect screen.
- **MVMPO … A** – aluminium grille models with white polymer coating.
- **MVMPO … s A** – aluminium models with white polymer coating and protecting insect screen.
- **MVMPO … A** (**no**/**p**) – aluminium grille models.
- **MVMPO … s A** (**no**/**p**) – aluminium models with a protecting insect screen.
- **MVMPO … Zn** – galvanized steel grille models.
- **MVMPO … s Zn** – galvanized steel models with a protecting insect screen.
- **MVMPO … «colour code»** – colourful polymer painted models.

Colour modifications

white RAL 9016	brown RAL 8017	blue RAL 5005	beige RAL 1015	grey RAL 7001	black RAL 9005

Overall dimensions

Model	Dimensions [mm]					Air pass, [m²]	Number of sections
	L	H	l	h	A		
MVMPO 225x75/2	225	75	211	61	5.5	0.0027	2
MVMPO 250x80/2	250	80	236	66	5.5	0.0027	2
MVMPO 300x75/3	300	75	286	61	5.5	0.0041	3
MVMPO 305x40/3	305	40	291	26	5.5	0.0014	3
MVMPO 305x90/3	305	90	291	76	5.5	0.0054	3
MVMPO 370x40/3	370	43	352	22	5.5	0.0027	3
MVMPO 380x40/4	380	43	366	29	5.5	0.0054	4
MVMPO 400x40/4	400	40	386	26	5.5	0.0018	4
MVMPO 400x80/4	400	80	386	66	5.5	0.0072	4
MVMPO 475x85/5	475	85	461	71	5.5	0.0068	5
MVMPO 500x40/5	500	40	488	22	5.5	0.0045	5
MVMPO 500x60/5	500	60	486	46	5.5	0.0045	5
MVMPO 500x90/5	500	90	486	76	5.5	0.0090	5
MVMPO 650x60/6	650	60	636	46	5.5	0.0063	6
MVMPO 650x65/6	650	65	632	47	5.5	0.0081	6
MVMPO 650x70/6	650	70	636	56	5.5	0.0081	6
MVMPO 650x100/6	650	100	636	86	5.5	0.0108	6

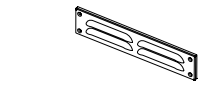

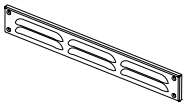

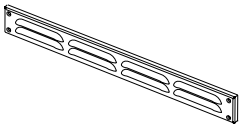

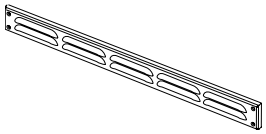

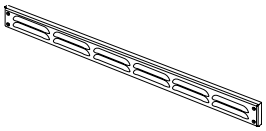

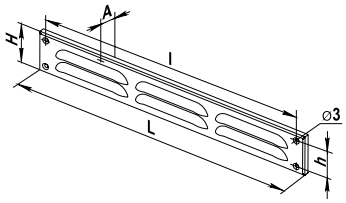

MVMPO...R
Series



Application

- Decoration of exhaust vents of public, residential and industrial ventilation systems.
- For ventilation, air conditioning and heating.
- Used for correct air flow distribution in premises.
- Internal or external wall and ceiling mounting.

Design

- Made of steel or aluminium and are suitable for colourful polymer painting.
- Quality materials and zinc-phosphate treatment ensure coating integrity and provide reliable corrosion protection.
- Edge-raised grille design.
- Equipped with a movable flap for air flow regulation.
- Screw fixing.

Modifications

- **MVMPO … R** – basic steel models with white polymer coating.
- **MVMPO…R A** – aluminium grille models with white polymer coating.
- **MVMPO…R A** (**no**/**p**) – aluminium grille models.
- **MVMPO …R «colour code»** – colourful polymer painted models.

Colour modifications

white	brown	blue	beige	grey	black
RAL 9016	RAL 8017	RAL 5005	RAL 1015	RAL 7001	RAL 9005

Overall dimensions

Model	Dimensions [mm]					Air pass, [m²]
	L	H	l	h	A	
MVMPO 155 R	155	155	132	132	9	0.0047
MVMPO 150x200 R	150	200	132	182	9	0.0067
MVMPO 160 R	160	160	137	137	9	0.0051
MVMPO 200x150 R	200	150	182	132	9	0.0061
MVMPO 200 R	200	200	182	182	9	0.0099
MVMPO 200x250 R	200	250	182	232	9	0.0135
MVMPO 200x300 R	200	300	182	282	9	0.0162
MVMPO 250x200 R	250	200	232	182	9	0.0108
MVMPO 250x300 R	250	300	232	282	9	0.0171
MVMPO 300x200 R	300	200	282	182	9	0.0172
MVMPO 300x250 R	300	250	282	232	9	0.0204

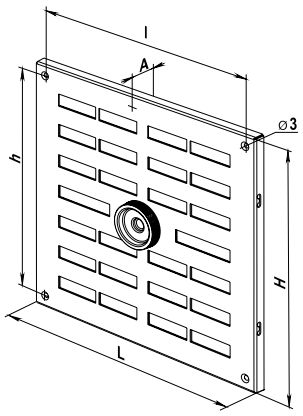

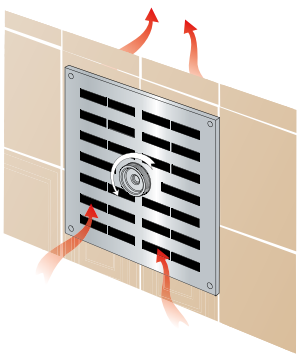

open

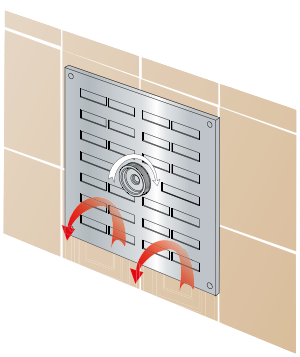

closed

MVMPO...Rr Series

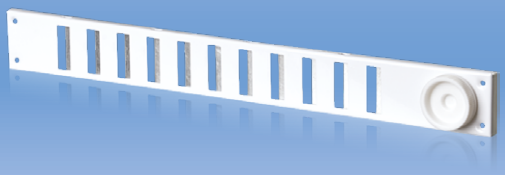

MVMPO...R Series



Application

- Decoration of exhaust vents of public, residential and industrial ventilation systems.
- For ventilation, air conditioning and heating.
- Used for correct air flow distribution in premises.
- Internal or external wall and ceiling mounting.

Design

- Made of steel or aluminium and are suitable for colourful polymer painting.
- Quality materials and zinc-phosphate treatment ensure coating integrity and provide reliable corrosion protection.
- Edge-raised grille design.
- Equipped with a movable flap for air flow regulation.
- Regulation with a wheel (MVMPO…Rs) or a tilt wand (MVMPO…R).
- Screw fixing.

Modifications

- **MVMPO…R / MVMPO…Rr** – basic steel models with white polymer coating.
- **MVMPO…R A / MVMPO…Rr A** – aluminium grilles with white polymer coating.
- **MVMPO...R A (no/p) / MVMPO...Rr A (no/p)** is made of Aluminium.
- **MVMPO…R «colour code» / MVMPO…Rr «colour code»** – colourful grilles with polymer coating.

Colour modifications



white RAL 9016 | brown RAL 8017 | blue RAL 5005 | beige RAL 1015 | grey RAL 7001 | black RAL 9005

Overall dimensions

Model	Dimensions [mm]					Air pass, [m²]
	L	H	l	h	A	
MVMPO 370x40 Rr	370	40	356	29	9	0.0033
MVMPO 380x40 Rr	380	43	366	29	9	0.0035
MVMPO 495x65 Rr	495	65	477	47	9	0.0072
MVMPO 500x40 Rr	500	40	482	29	9	0.0054
MVMPO 500x90 Rr	500	90	482	72	9	0.0090
MVMPO 650x60 Rr	650	60	632	42	9	0.0063
MVMPO 650x65 Rr	650	65	632	44	9	0.0110

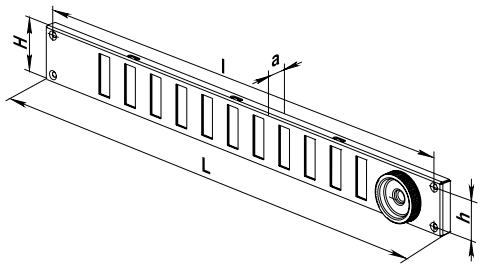

Overall dimensions

Model	Dimensions [mm]					Air pass, [m²]
	L	H	l	h	A	
MVMPO 380x40 R	380	43	366	29	9	0.0035

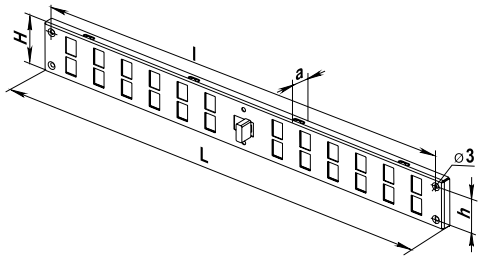

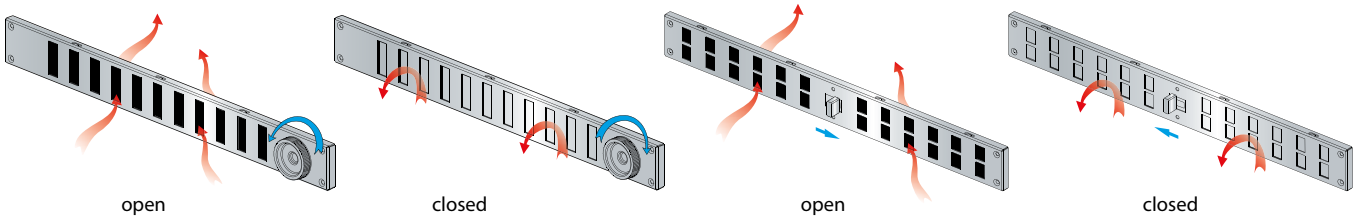

MVM
Series

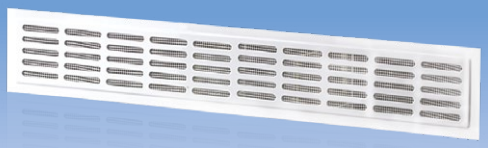

Application

- Mounting in door leaves of bathrooms, kitchens, etc.
- Suitable for installation into window sills for correct warm air distribution from radiators.
- Used to arrange correct air circulation in premises.

Design

- Made of polymer-coated or galvanized steel and are suitable for painting in various colours.
- Quality materials and zinc-phosphate treatment ensure coating integrity and provide reliable corrosion protection.
- Screw or lug fixing.
- Modifications with a protecting insect screen are available.
- Various decorative ornaments.
- Minimum door leaf thickness for grilles with fixing lugs is 30 mm.

Modifications

- **MVM...** – basic steel models with white polymer coating and screw fixing.
- **MVM...s** – steel grilles with white polymer coating and a protecting insect screen.
- **MVM...K** – steel grilles with white polymer coating and fixing lugs.
- **MVM...s K** – steel models with white polymer coating, fixing lugs and a protecting insect screen.
- **MVM...Zn** – galvanized steel models with screw fixing.
- **MVM...s Zn** – galvanized steel models with screw fixing and a protecting insect screen.
- **MVM...K Zn** – galvanized steel models with fixing lugs.
- **MVM...s K Zn** – galvanized steel models with fixing lugs and a protecting insect screen.
- **MVM... «colour code»** – colourful polymer painted models.

Colour modifications

white RAL 9016	brown RAL 8017	blue RAL 5005	beige RAL 1015	grey RAL 7001	black RAL 9005

Overall dimensions

Model	Dimensions [mm]					Number of sections	Air pass, [m²]
	L	H	l	h	A		
MVM 250x80/5-3	250	80	236	66	11.5	5	0.0055
MVM 475x80/10-3	475	80	461	71	11.5	10	0.0103

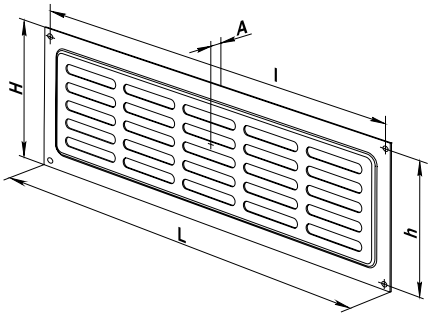

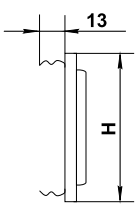

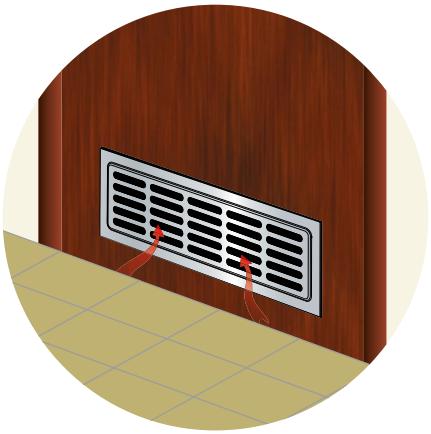

MVMP
Series

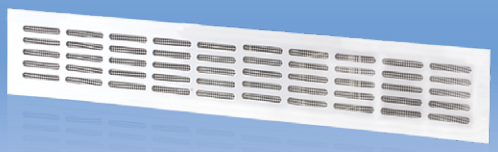

Application

- Mounting in door leaves of bathrooms, kitchens, etc.
- Suitable for installation into window sills for correct warm air distribution from radiators.
- Used to arrange correct air circulation in premises.

Design

- Made of polymer-coated or galvanized steel and are suitable for painting in various colours.
- Quality materials and zinc-phosphate treatment ensure coating integrity and provide reliable corrosion protection.
- Screw fixing.
- Modifications with an insect screen are available.
- Various decorative ornaments.
- Minimum door leaf thickness for grilles with fixing lugs is 30 mm.

Grille modifications

- **MVMP...** – basic steel models with white polymer coating and screw fixing.
- **MVMP...s** – steel grilles with white polymer coating equipped with a protecting insect screen.
- **MVMP...Zn** – galvanized steel grilles with screw fixing.
- **MVMP...s Zn** – galvanized steel grilles with screw fixing and a protecting insect screen.
- **MVMP...«colour code»** – colourful polymer painted models.

Colour modifications

white	brown	blue	beige	grey	black
RAL 9016	RAL 8017	RAL 5005	RAL 1015	RAL 7001	RAL 9005

Decorative ornament types

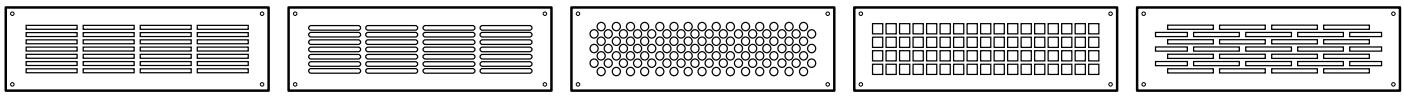

MVMP...-2 **MVMP...-3** **MVMP...-4** **MVMP...-5** **MVMP...-6**

Overall dimensions

Model	Dimensions [mm]					Number of sections	Air pass, [m²]
	L	H	l	h	A		
MVMP 250x80	250	80	236	66	0.8	5	0.0055
MVMP 350x80	350	80	338	68	0.8	6	0.0067
MVMP 430x80	430	80	418	68	0.8	7	0.0083
MVMP 450x80	450	80	438	68	0.8	8	0.0094
MVMP 475*80	475	80	461	71	0.8	10	0.0110

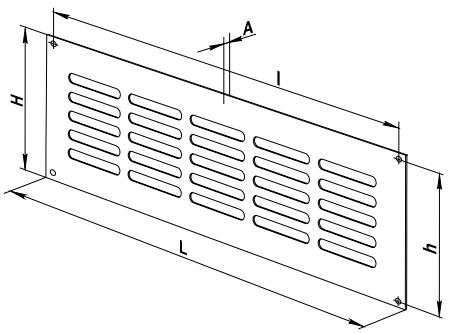

MVMA
Series

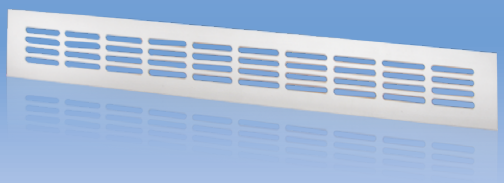

Application

- Mounting in door leaves of bathrooms, kitchens, etc.
- Suitable for installation into window sills for correct warm air distribution from radiators.
- Used to arrange correct air circulation in premises.

Design

- Made of polymer-coated or galvanized steel and are suitable for painting in various colours.
- Fixing with lugs.
- Modifications with a protecting insect screen are available.
- Minimum door leaf thickness is 32 mm.

Grille modifications

- **MVMA…An** – grilles from anodized aluminium
- **MVMA…«colour code»** – colourful polymer painted models.
- **MVMA…s** – models from aluminium with a protecting insect screen.
- **MVMA…s An** – models from anodized aluminium and a protecting insect screen.

Colour modifications



Overall dimensions

Model	Dimensions [mm]		Air pass, [m²]
	L	H	
MVMA 400x60	400	60	0.0062
MVMA 400x80	475	80	0.0093
MVMA 400x100	400	100	0.0120
MVMA 480x80	480	80	0.0120
MVMA 500x60	500	60	0.0078
MVMA 500x80	500	80	0.0120
MVMA 500x100	500	100	0.0156
MVMA 600x60	600	60	0.0093
MVMA 600x80	600	80	0.0140
MVMA 600x100	600	100	0.0186
MVMA 800x60	800	60	0.0120
MVMA 800x80	800	80	0.0186
MVMA 800x100	800	100	0.0248
MVMA 1000x60	1000	60	0.0160
MVMA 1000x80	1000	80	0.0256
MVMA 1000x100	1000	100	0.0326

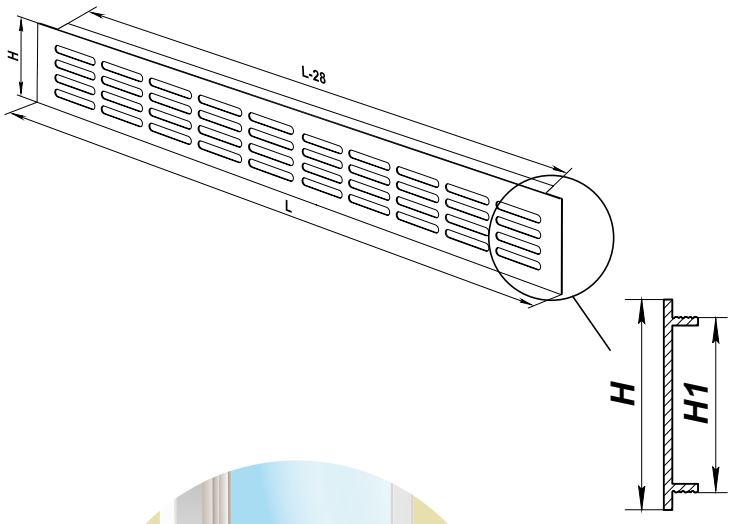

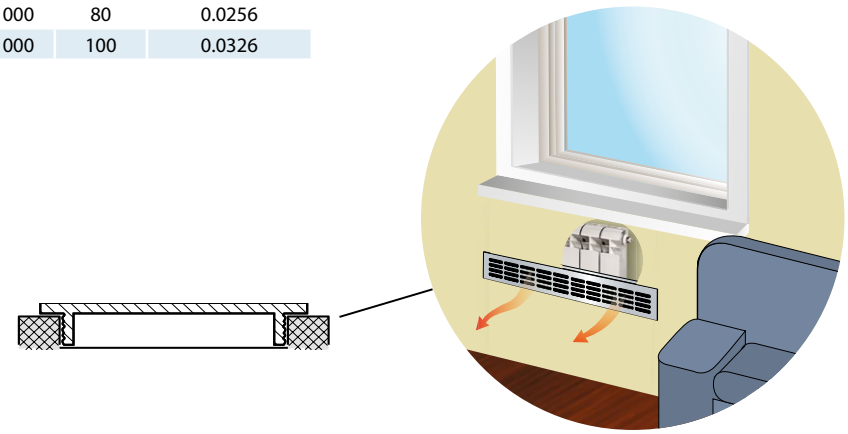

MVM-50 S A
Series



Application

- For installation in doors of bathrooms, toilets, kitchens, etc.
- It can also be installed in various pieces of furniture to ventilate them.

Design

- Made of polymer coated extruded aluminum.
- White RAL 9016.
- Fastening to surfaces using screws (not included in the delivery set).

Overall dimensions

Model	Dimensions [mm]		
	D	D1	a
MVM-50 S A	50	41	5



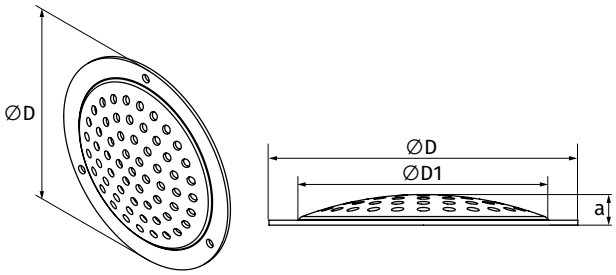

MVM...bV A Series



Application

- Decoration of supply and exhaust vents of public, residential and industrial ventilation systems.
- Applicable for HVAC systems.
- Used for correct air flow distribution in premises.

Design

- Made of aluminium.
- Mounting with fixing lugs.
- Equipped with a round Ø 100 mm spigot for connection to air ducts.



Overall dimensions

Model	Dimensions [mm]		Air pass, [m²]
	D	L	
MVM 101 bV A	101	24	0.0024

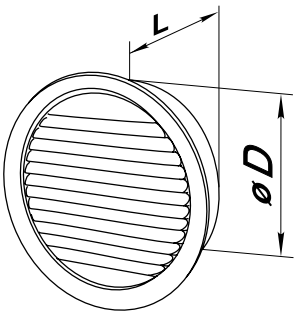

MVM...bV N
Series



Application

- Decoration of supply and exhaust vents of public, residential and industrial ventilation systems.
- Applicable for HVAC systems.
- Used for correct air flow distribution in premises.

Design

- Made of stainless steel.
- Insect screen included.
- Mounting with fixing lugs.
- Equipped with a round Ø 100, 125, 150, 200 mm spigot for connection to air ducts.



Overall dimensions

Model	Dimensions [mm]			Air pass, [m²]
	D	D1	L	
MVM 100 bV N	96	150	134	0.0048
MVM 125 bV N	119	184	165	0.0082
MVM 150 bV N	143	205	190	0.0126

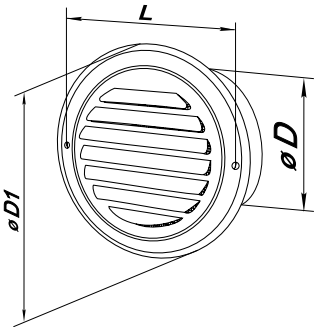

MVM...b N Series



Application

- Decoration of supply and exhaust vents of public, residential and industrial ventilation systems.
- Applicable for HVAC systems.
- Used for correct air flow distribution in premises.

Design

- Made of stamped stainless steel.
- Rubber seals for tight contact to the wall.
- Fixing with screws.

Overall dimensions

Model	Dimensions [mm]			Air pass, [m²]
	D	D1	L	
MVM 100 b N	95	133	22	0.0057
MVM 125 b N	122	165	24	0.0093
MVM 150 b N	144	190	26	0.0138

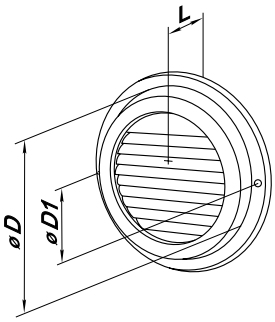

MVM...bVs N
Series



Application

- Decoration of supply and exhaust vents of public, residential and industrial ventilation systems.

Design

- Made of stainless steel.
- Insect screen included.
- Rubber seals for tight contact to the wall.
- Fitted with a round Ø 100, 125, 150, 160 or 200 mm spigot for connection to the air ducts.
- Fixation to the wall with screws.

Overall dimensions

Model	Dimensions [mm]			Air pass, [m²]
	D	D1	L	
MVM 102 bVs N	97	133	52	0.0048
MVM 122 bVs N	120	165	52	0.0082
MVM 152 bVs N	145	192	62	0.0126
MVM 162 bVs N	155	192	62	0.0135
MVM 202 bVs N	195	253	73	0.0178

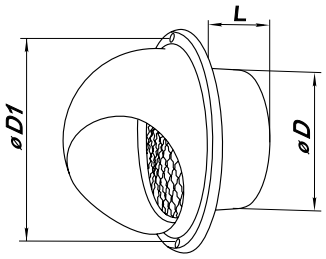

MVM...bV N
Series



Application

- Decoration of supply and exhaust vents of public, residential and industrial ventilation systems.
- Applicable for HVAC systems.

Design

- Made of stainless steel.
- Directing vanes and an insect screen included.
- Rubber seals for tight contact to the wall.
- Equipped with a round Ø 100, 125 or 150 mm spigot for connection to air ducts.
- Fixing with screws.



Overall dimensions

Model	Dimensions [mm]			Air pass, [m²]
	D	D1	L	
MVM 102 bV N	97	133	52	0.0048
MVM 122 bV N	120	165	52	0.0082
MVM 152 bV N	145	192	62	0.0126
MVM 202 bV N	195	253	62	0.0178

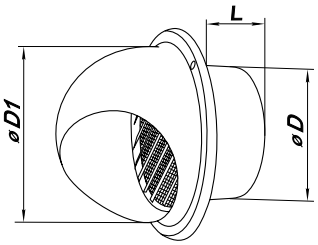

MVM...VJ N
Series



Application

- Decoration of exhaust vents of public, residential and industrial ventilation systems.
- Applicable for exhaust HVAC systems.

Design

- Made of stainless steel.
- Fixing with screws.
- Rubber seals for tight contact to the wall.



Overall dimensions

Model	Dimensions [mm]			Air pass, [m²]
	D	□H	L	
MVM 100 VJ N	97	137 x 137	52	0.0070
MVM 125 VJ N	120	167 x 167	52	0.0112
MVM 150 VJ N	145	167 x 167	62	0.0164

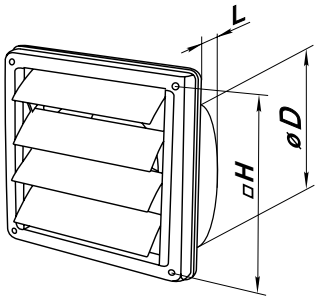

MVM...V N
Series

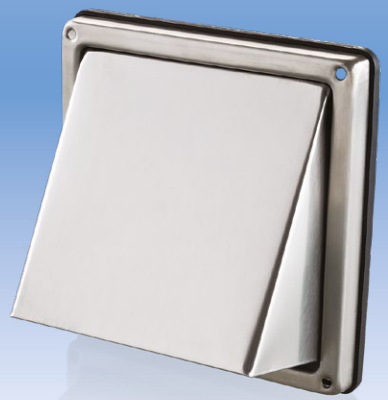

Application

- Decoration of exhaust vents of public, residential and industrial ventilation systems.

Design

- Made of stainless steel.
- Back valve included.
- Rubber seals for tight contact to the wall.
- Equipped with a round Ø 100, 125 or 150 mm spigot for connection to air ducts.
- Fixing with screws.



Overall dimensions

Model	Dimensions [mm]			Air pass, [m²]
	D	□H	L	
MVM 102 V N	97	137 x 137	52	0.0071
MVM 122 V N	120	167 x 167	52	0.0113
MVM 152 V N	145	167 x 167	62	0.0165

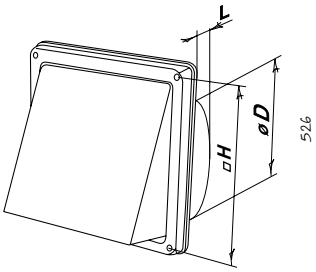

MVM...bVL A
Series



Application

- Decoration of supply and exhaust vents of public, residential and industrial ventilation systems.
- Applicable for HVAC systems.
- Used for correct air flow distribution in premises.

Design

- Made of cast aluminium.
- Equipped with a round Ø 100, 125 or 150 mm spigot for connection to air ducts.
- Insect screen included.
- Rubber seals for tight contact to the wall.
- Fixing with screws.



Overall dimensions

Model	Dimensions [mm]			Air pass, [m²]
	D	D1	L	
MVM 100 bVL A	97	140	52	0.0045
MVM 125 bVL A	120	178	52	0.0067
MVM 150 bVL A	145	178	62	0.0115

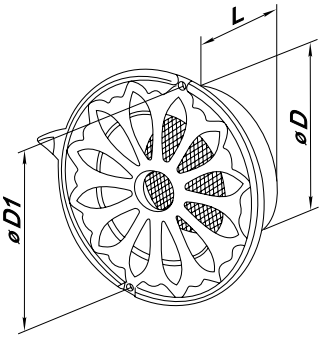

MVM...VR N
Series



Application

- Decoration of supply and exhaust vents of public, residential and industrial ventilation systems.
- Applicable for HVAC systems.
- Used for correct air flow distribution in premises.

Design

- Made of stainless steel.
- Mounting to rectangular 55x110 and 60x204 mm air ducts with fixing lugs.



Overall dimensions

Model	Dimensions [mm]		Air pass, [m²]
	H x B	L	
MVM 110*54 VR N	110x54	25	0.0028
MVM 205*61 VR N	205x61	30	0.0042

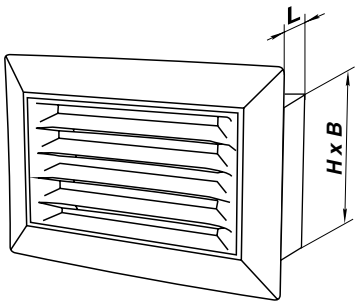

MVMP...R N
Series

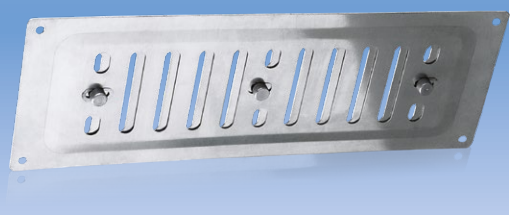

Application

- Decoration of supply and exhaust vents of public, residential and industrial ventilation systems.
- Applicable for HVAC systems.
- Used for correct air flow distribution in premises.

Design

- Made of stainless steel.
- Movable flap for air flow control.
- Fixing with screws.



Overall dimensions

Model	Dimensions [mm]				Air pass, [m²]
	B1	H1	B	H	
MVMP 260*90 R N	225	75	260	90	0.0036
MVMP 260*165 R N	225	150	260	165	0.0085
MVMP 260*240 R N	225	225	260	240	0.0127

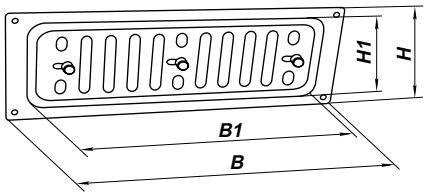

MVMP...R A
Series

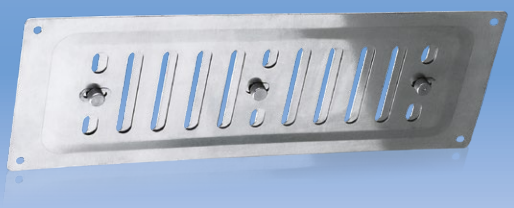

Application

- Decoration of supply and exhaust vents of public, residential and industrial ventilation systems.
- Applicable for HVAC systems.
- Used for correct air flow distribution in premises.

Design

- Made of aluminium.
- Movable flap for air flow control.
- Fixing with screws.



Overall dimensions

Model	Dimensions [mm]				Air pass, [m²]
	B1	H1	B	H	
MVMP 260*90 R A	225	75	260	90	0.0036
MVMP 260*165 R A	225	150	260	165	0.0085
MVMP 260*240 R A	225	225	260	240	0.0127

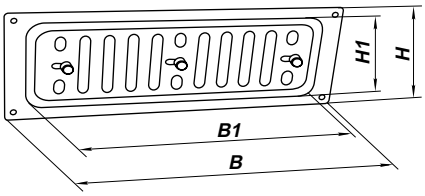

MVMO1…b
Series



Application

- Decoration of exhaust vents of public, residential and industrial ventilation systems.
- For ventilation, air conditioning and heating.
- Used for correct air flow distribution in premises.
- Internal or external wall and ceiling mounting.

Design

- Made of steel, galvanized steel, stainless steel or aluminium and are suitable for colourful polymer painting.
- Screw fixing.
- Quality materials and zinc-phosphate treatment ensure coating integrity and provide reliable corrosion protection.
- Equipped with a protecting insect screen.

Modifications

- **MVMO1…bs** – basic white polymer coated grilles.
- **MVMO1…bs A** – aluminium white polymer coated grilles with a protecting insect screen.
- **MVMO1…bs An** – grilles made of anodized brushed aluminium with a protecting insect screen.
- **MVMO1…bs Ap** – grilles made of polished aluminium with a protecting insect screen.
- **MVMO1…bs N** – grilles made of stainless steel with a protecting insect screen.
- **MVMO1…bs Zn** – grilles made of galvanized steel with a protecting insect screen.
- **MVMO1…bs "colour code"** – colourful polymer painted models.

Colour modifications

white	brown	blue	beige	grey	black
RAL 9016	RAL 8017	RAL 5005	RAL 1015	RAL 7001	RAL 9005

Overall dimensions

Model	Dimensions [mm]				Free area [m²]
	D	B	B1	L	
MVMO1 100 bs	142	1.3	8.4	114	0.0051

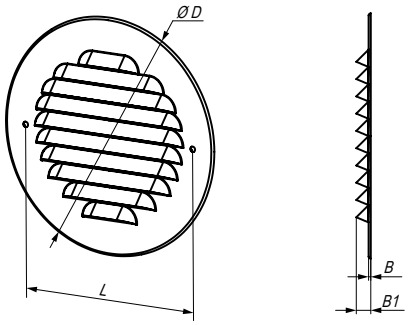



MVMO1…bs / MVMO1…bs A



MVMO1…bs Zn



MVMO1…bs An



MVMO1…bs Ap / MVMO1…bs N

MVMO...bV
Series



Application

- Decoration of exhaust vents of public, residential and industrial ventilation systems.
- For ventilation, air conditioning and heating.
- Used for correct air flow distribution in premises.
- Internal or external wall and ceiling mounting.

Design

- Made of steel, galvanized steel, stainless steel or aluminium and are suitable for colourful polymer painting.
- Edge-raised grille design.
- Quality materials and zinc-phosphate treatment ensure coating integrity and provide reliable corrosion protection.
- Modifications with a protecting insect screen.

Colour modifications

white	brown	blue	beige	grey	black
RAL 9016	RAL 8017	RAL 5005	RAL 1015	RAL 7001	RAL 9005

Modifications

Round grille with a flange (**bV**): **MVMO...bV**



- Equipped with a flange for connection to round air ducts.
- **MVMO...bV** – steel grilles with white polymer coating.
- **MVMO...bV A** – aluminium grilles with white polymer coating.
- **MVMO...bVs An** – grilles made of anodized brushed aluminium with a protecting insect screen.
- **MVMO...bVs Ap** – grilles made of polished aluminium with a protecting insect screen.
- **MVMO...bVs N** – grilles made of stainless steel with a protecting insect screen.
- **MVMO...bVs Zn** – grilles made of galvanized steel with a protecting insect screen.
- **MVMO ... bV "colour code"** – colourful polymer painted models.



Round grille with a flange and a lip seal (**bV1**): **MVMO...bV1**



- Equipped with a flange for connection to round air ducts.
- **MVMO...bV1** – steel grilles with white polymer coating.
- **MVMO...bV1 A** – grilles made of white polymer coated aluminium.
- **MVMO...bV1s An** – grilles made of anodized brushed aluminium with a protecting insect screen.
- **MVMO...bV1s Ap** – grilles made of polished aluminium with a protecting insect screen.
- **MVMO...bV1s N** – grilles made of stainless steel with a protecting insect screen.
- **MVMO...bV1s Zn** – grilles made of galvanizes steel with a protecting insect screen.
- **MVMO...bV1 "colour code"** – colourful polymer painted models.



Round grille with a flange and springs (**bV K**): **MVMO...bV K**



- Equipped with a flange for connection to round air ducts.
- **MVMO…bV K** – steel white polymer coated grilles.
- **MVMO…bV K A** – aluminium white polymer coated grilles.
- **MVMO…bVs K An** – grilles made of anodized brushed aluminium with a protecting insect screen.
- **MVMO…bVs K Ap** – grilles made of polished aluminium with a protecting insect screen.
- **MVMO…bVs K N** – grilles made of stainless steel with a protecting insect screen.
- **MVMO…bVs K Zn** – grilles made of galvanized steel with a protecting insect screen.
- **MVMO…bV K "colour code"** – colourful polymer painted models.



Overall dimensions

Model	Dimensions [mm]			Free area [m²]	Fig. no.
	D	D1	L		
MVMO 100 bV					1, 2
MVMO 100 bV1	99	129	48	0.0051	1, 3
MVMO 100 bV K					1, 4
MVMO 125 bV					1, 2
MVMO 125 bV1	124	154.5	48	0.0083	1, 3
MVMO 125 bV K					1, 4
MVMO 150 bV					1, 2
MVMO 150 bV1	149	179.5	48	0.0118	1, 3
MVMO 150 bV K					1, 4
MVMO 160 bV					1, 2
MVMO 160 bV1	159	189.5	48	0.0138	1, 3
MVMO 160 bV K					1, 4
MVMO 200 bV					1, 2
MVMO 200 bV1	198	229	48	0.0214	1, 3
MVMO 200 bV K					1, 4

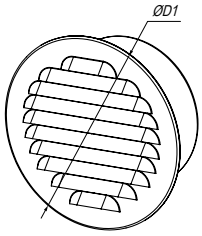

Fig. 1

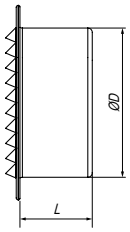

Fig. 2

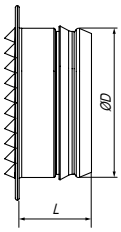

Fig. 3

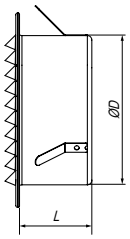

Fig. 4



Polymer coated steel / polymer coated aluminium



Galvanized steel



Anodized brushed aluminum



Polished aluminum / stainless steel

MVMO…bS K1
Series



Application

- Decoration of exhaust vents of public, residential and industrial ventilation systems.
- For ventilation, air conditioning and heating.
- Used for correct air flow distribution in premises.
- Internal/external wall and ceiling mounting.

Design

- Made of steel, galvanized steel, stainless steel or aluminium and are suitable for colourful polymer painting.
- Equipped with a spacer mechanism for mounting in a round ventilation hole without additional fastening elements.
- Quality materials and zinc-phosphate treatment ensure coating integrity and provide reliable corrosion protection.
- Modifications with a protecting insect screen.

Modifications

- Equipped with a plastic spreader gearing to mount in a round air vent.
- **MVMO…bs K1** – steel grilles with white polymer coating with a protecting insect screen and plastic spreader gearing.
- **MVMO…bs K1 A** – grilles made of white polymer coated aluminium.
- **MVMO…bs K1 An** – grilles made of anodized brushed aluminium with a protecting insect screen and plastic spreader gearing.
- **MVMO…bs K1 Ap** – grilles made of polished aluminium with a protecting insect screen and plastic spreader gearing.
- **MVMO…bs K1 Zn** – grilles made of galvanizes steel with a protecting insect screen and plastic spreader gearing.
- **MVMO…bs** „colour code" – colourful polymer painted models.

Overall dimensions

Model	Dimensions [mm]		Free area [m²]
	D	L	
100 MVMO bs K1	129	114	0.0051
125 MVMO bs K1	155	139	0.0083
150 MVMO bs K1	180	164	0.0118
160 MVMO bs K1	190	174	0.0133
200 MVMO bs K1	229	211	0.0206

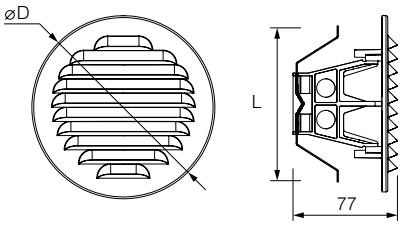

Spacer mechanism for mounting

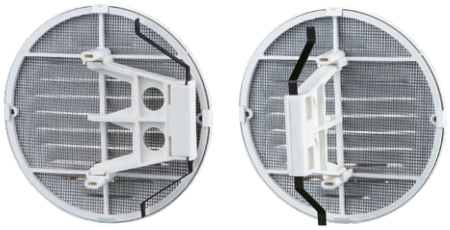

Colour modifications





Steel grilles with white polymer coating

Grilles made of white polymer coated aluminium

Grilles made of anodized brushed aluminium

Grilles made of polished aluminium

Grilles made of galvanizes steel

FLEXIBLE AIR DUCTS FOR VENTILATION AND AIR CONDITIONING



Non-insulated air ducts
Polyvent 605 series
Aluminium foil

page 332



Non-insulated air ducts
Polyvent N series
metalized foil

page 333



Insulated air ducts
Isovent N
metalized foil

page 334



Non-insulated air ducts
Polyvent 660 series
polyvinylchloride [65 µm]

page 335

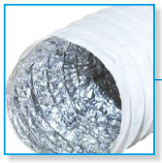

Non-insulated air ducts
Polyvent 665 Comby series
Aluminium foil and PVC

page 336

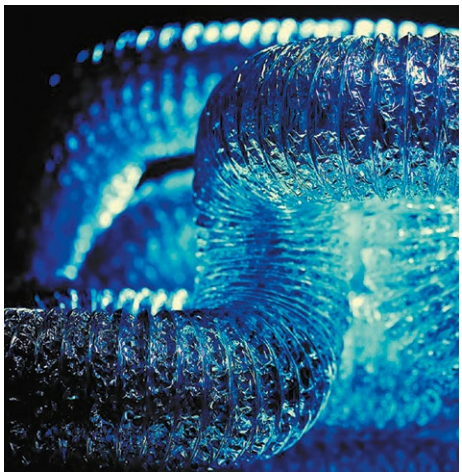



What is a flexible air duct?

Flexible air ducts, Polyvent and Isovent series are the air ducts with a frame made of spiral wire reinforcement with elastic covering. Semi-flexible air ducts Aluvent and Thermovent are the spirally wound air ducts made of durable and less elastic materials.
The flexible and semi-flexible air duct design allows easy transportation to the site in compressed condition whereas during mounting the air ducts is stretched up to required length.



Due to many advantages flexible and semi-flexible air ducts gain more and more popularity.

Basic advantages:

- Compact transportation;
- Low cost and easy weight of the system;
- Less time for mounting of the system;
- Quick system geometry amendment whenever required;
- Easy to use for dismantling, service and repair works;
- Cost reduction for the project.

Air duct application

Flexible and semi-flexible air ducts are used for transportation of air masses in ventilation, air heating and conditioning systems and for the technological purposes as air supply to industrial units, technological waste aspiration and transportation of granular and granulated materials in pneumatic systems, etc.
The air ducts are installed in ventilation systems and vents of high-rise buildings, cottages and residential houses.
In commercial and industrial objects the air duct are used for air conditioning systems, air supply and exhaust systems, air heating systems.
A wide range of the VENTS air ducts offers the best suitable air duct type not only for ventilation, air conditioning and air heating systems but for specially designed industrial application:

- **Chemistry:** aggressive media transportation.
- **Pharmaceutics:** technological processes including pneumatic transportation.
- **Food and beverage:** transportation of food products and waste within permissible limits.
- **Car service centres, filling stations, oil refineries:** gas mixture exhaust.
- **Woodwork:** transportation of saw-dust and woodwork waste.
- **Glass industry:** aspiration of dust, glass and ceramic particles.

Use Tables 1, 2 and 3 to select air duct type.

VENTS air duct design

The Polyvent and Isovent air ducts' frame is made of high-carbon steel spiral wire with 0.8-2 mm diameter that is covered by a film of various materials.
The spiral wire must have corrosion-resistant material and be thoroughly checked to ensure its durability and defeat resistance.
The distance between spiral turns is selected to ensure the air duct flexibility, to preserve its shape, comply with aerodynamic characteristics and to bear the construction load.
The Polyvent series air ducts are available in round and rectangular modifications and manifold standard sizes to meet all the mounting requirements.
The Aluvent and Thermovent air ducts are the spirally wound air ducts with a specially designed tight locks that provide impervious seam and complete air tightness.
The covering materials are selected to suit required applications and differ in thickness, durability and chemical composition. So the required air duct type is determined by a specific environment and purpose.

Environmental protection

VENTS Company keeps a watchful eye on the ecological compatibility of the production process and applied materials. The use of the up-to-date technologies allows the VENTS air ducts comply with the highest ecology standards and be classified as non-toxic. These air ducts produce no harmful substances emission and not harmful.

Fire resistance

Polyvent 605, Isovent 605, Polyvent 665 COMBY, Aluvent, Thermovent are used for objects with special fire-resistance requirements to air ducts.
Flexible air ducts Polyvent 605, Isovent 605, Polyvent 665 COMBY have M0 and M1 fire protection class according to European fire standards.
The air ducts are available on two modifications: M0 for short-time resistance up to +250°C for and M1 for short-time resistance up to +150°C.
Semi-flexible air ducts have higher fire resistance rating: Aluvent series up to +250°C, Isovent series up to +800°C.

Sound- and thermal insulation

Isovent series insulated air ducts are the flexible air ducts covered with mineral wool and outer sleeve. Such design meets the strictest sound- and thermal insulation requirements and prevents condensate generation, minimizes heat and cold losses, decreases noise level.
Mineral wool layer with 25 mm thickness is used for high operating conditions. This material is environmentally safe and has perfect insulating characteristics.

Depending on required insulation type the air ducts are available in two insulation modifications:

- ISO – thermal insulation;
- SONO – sound-insulation.

Table 1. Air ducts characteristics

Series	Material	Temperature mode, °C	Aspiration of chemical vapours and aggressive substances	Aspiration of abrasive and powdered particles	Application
Polyvent 605	Flexible non-insulated aluminium foil air ducts with steel wire frame	-30 ... +250 (for M0) -30 ... +150 (for M1)	+	-	Residential and industrial ventilation, air conditioning and heating systems, peripheral sections of large central utility systems with the maximum pressure 3000 Pa and special fire-resistance requirements to air ducts (M0 or M1 models).
Isovent 605	Flexible aluminium foil heat-insulated air ducts ISO – thermal insulation; SONO – sound-insulation.	-30 ... +250 (for M0) -30 ... +150 (for M1)	+	-	Residential and industrial ventilation, air conditioning and heating systems, peripheral sections of large central utility systems with the maximum pressure 3000 Pa and special fire-resistance requirements to air ducts (M0 or M1 models). Especially suitable for applications with requirements to thermal insulation (Iso series) or sound insulation (Sono series) to prevent condensate generation, heat and cold losses and noise level decrease.
Polyvent N	Flexible non-insulated air ducts with steel wire frame covered with metalized polyester film (45 µm)	-30...+120	+	-	Residential and industrial ventilation, heating and air conditioning systems with no special requirements to the combustibility and temperature resistance, in heat accumulation units and peripheral sections of large central utility systems with the maximum pressure 3000 Pa.
Isovent N	Flexible insulated air ducts with steel wire frame covered with metalized polyester film (45 µm) ISO – thermal insulation; SONO – sound-insulation.	-30...+120	+	-	Residential and industrial ventilation, air conditioning and heating systems with special flammability and temperature resisting requirements, in particular for applications with the need of heat insulation combined with flexible air ducts to prevent condensate generation and heat and cold losses as well as in peripheral sections of large central utility systems with the maximum pressure 3000 Pa.
Polyvent 660	Flexible PVC film non-insulated air ducts with steel wire frame (65 µm)	-18...+70	-	-	Residential and commercial ventilation systems.
Polyvent 661	Flexible PVC film non-insulated air ducts with steel wire frame (110 µm)	-18...+70	-	-	Residential and commercial ventilation systems.
Polyvent 606	Flexible non-insulated PVC film air ducts with steel wire frame (250 µm)	-18...+90	-	+	Residential, commercial and industrial ventilation and air conditioning systems operating in heavy-duty mode for humid air removal, removal of smoke, post-welding gases, powdered solid particles, waste chips, fibres, vapours, soot and low-abrasive materials.
Polyvent 607	Flexible non-insulated PVC film air ducts with steel wire frame (700 µm)	-18...+90	+	+	Industrial ventilation systems operating in heavy-duty mode for humid air removal, removal of smoke, post-welding gases, powdered solid particles, waste chips, fibres, vapours, soot and abrasive materials.

Table 1 (continued)

Series	Material	Temperature mode, °C	Aspiration of chemical vapours and aggressive substances	Aspiration of abrasive and powdered particles	Application
Polyvent 600	Flexible non-insulated air ducts with steel wire frame made of PVC-coated polyester fabric (250 µm)	-21...+110	+	+	Industrial ventilation systems operating in heavy-duty mode, incl. agricultural and pharmaceutical applications for aspiration of granulated material, removal of chemical vapours, smoke, postwelding gases, powdered solid particles, waste chips, fibres, vapours, soot and low-abrasive dust and in environment with special temperature resistance requirements (up to +110 °C).
Polyvent 601	Flexible non-insulated air ducts with steel wire frame made of PVC-coated polyester fabric (250 µm)	-21...+110	+	+	Industrial ventilation systems operating in heavy-duty mode, incl. agricultural and pharmaceutical applications for aspiration of granular and granulated material, removal of chemical vapours, smoke, postwelding gases, powdered solid particles, waste chips, fibres, vapours, soot and low-abrasive dust and in environment with special temperature resistance requirements (up to +110 °C).
Polyvent 620	Flexible polyurethane non-insulated air ducts with steel wire frame (250 µm)	-21...+110	+	+	Industrial ventilation systems, the ideal solution for application in woodwork and timber industry, car service and fuel stations, oil refineries. Used for removal of gas mixture with high abrasive dust content. Suitable for outside installation.
Polyvent 621	Flexible polyurethane non-insulated air ducts with steel wire frame (450 µm)	-21...+110	+	+	Industrial ventilation systems, the ideal solution for application in woodwork and timber industry, car service and fuel stations, oil refineries. Used for removal of gas mixture with high abrasive dust content. Suitable for outside installation.
Polyvent 665 Comby	Flexible non-insulated air ducts with steel wire frame covered with aluminium foil and polyether	-30 ... +250 (for M0) -30 ... +150 (for M1)	+	-	Residential ventilation and air conditioning systems of living quarters, administrative and public premises.
Polyvent 615	Flexible polyurethane non-insulated air ducts with steel wire frame (150 µm)	-18...+70	-	-	Residential ventilation systems. Recommended for ventilation of child care centres, educational and medial facilities, spa resorts.

Series	Material	Temperature mode, °C	Aspiration of chemical vapours and aggressive substances	Aspiration of abrasive and powdered particles	Application
Aluvent	Semi-flexible aluminium air ducts (50 µm, 80 µm, 100 µm)	-30…+ 250	+	+	Residential and industrial ventilation, air conditioning and heating systems with the maximum pressure 10 000 Pa.
Thermovent	Semi-flexible galvanized or stainless steel air ducts (80 µm, 100 µm)	-30…+700	+	+	Residential and industrial ventilation, air conditioning and heating systems with the maximum pressure 10 000 Pa for hot air removal from boiler houses and smoke exhaust systems.
Thermovent Aero	Stainless steel air ducts with high temperature resistance (100 µm)	-30…+800	+	+	Residential and industrial ventilation, air conditioning and heating systems with the maximum pressure 10 000 Pa for hot air removal from boiler houses and smoke exhaust systems.
Thermovent Flex	Semi-flexible corrugated stainless steel air ducts with high temperature resistance (100 µm)	-30…+800	+	+	Residential and industrial ventilation, air conditioning and heating systems with the maximum pressure 10 000 Pa for hot air removal from boiler houses and smoke exhaust systems.
Thermovent Aero Flex	Double-layer stainless steel air ducts with smooth internal surface and corrugated external layer	-30…+800	+	+	Residential and industrial ventilation, air conditioning and heating systems with the maximum pressure 10 000 Pa for hot air removal from boiler houses and smoke exhaust systems.

Table 2. Chemical resistance of flexible and semi–flexible Aluvent air ducts

Air duct type	615, 6150	660, 661, 602, 607	606, 6061	600, 601	620, 6201, 621	Aluvent
DDT-kerosene	X	A	A	A	A	A
Skydrol-oil for hydraulic systems	X	0	0	0	0	0
Nitric acid 10 %	A	A	A	A	A	A
Amyl alcohol	A	A	A	A	A	A
Ammonium hydrate	A	A	A	A	A	A
Acetylene	0	0	0	0	0	A
Acetone	A	X	X	X	0	A
Benzene	X	X	X	X	0	B
Potassium bicarbonate	A	A	A	A	A	A
Butyl alcohol	X	A	A	A	A	A
Butyl ether	0	A	A	A	A	0
Vinyl chloride (monomer)	X	X	X	X	0	0
Glycerine	A	C	C	C	C	A
Tannic acid	A	A	A	A	A	A
Potassium carbonate	A	A	A	A	A	X
Sodium carbonate	A	A	A	A	A	A
Xylene	X	X	0	0	0	A
Hydraulic oil	0	0	0	0	C	0
Methyl alcohol	A	A	A	A	A	A
Formic acid	B	0	0	0	C	B
Nitrobenzene	X	X	X	X	0	A
Ozone	X	A	A	A	A	B
Hydrogen peroxide	B	A	A	A	A	A
Perchloroethylene	X	0	0	0	0	B
Sodium chloride	A	A	A	A	A	B
Natural gas dry	A	A	A	A	A	B
Propane (gas)	A	A	A	A	A	A
Sulphuric acid 10 %	A	A	A	A	A	B
Hydrogen sulfide, wet	A	0	0	0	0	A
Hydrogen sulfide, dry	A	0	0	0	0	A
Esters (non-flammable)	0	0	0	0	0	0
Hydrochloric acid 15 %	A	A	A	A	A	0
Spirits	0	C	C	C	B	0
Toluene	X	X	X	X	0	A
Jet oil JP-1	X	A	A	A	A	0
Trichloroethylene (tri)	X	0	0	0	0	C

Heavy-flammable	N	N	J	J	J	J
Carbon monoxide	A	0	0	0	0	A
Carbon dioxide	A	A	A	A	A	A
Carbonic acid	A	A	A	A	A	A
Pheron 12	0	B	B	B	B	0
Ammonium phosphate	0	A	A	A	A	B
Sodium phosphate	A	A	A	A	A	A
Phosphoric acid 50 %	A	A	A	A	A	B
Chlorine dry	X	0	0	0	0	B
Potassium chlorate	A	A	A	A	0	A
Aluminium chloride	A	A	A	A	A	B
Ammonium chloride	A	A	A	A	A	A
Ferric chloride	A	0	0	0	0	X
Antimonous chloride 50 %	A	0	0	0	0	B
Zinc chloride	A	A	A	A	A	C
Ethylic alcohol	A	A	A	A	A	0

A – High resistance
B – Medium resistance
C – Relative resistance
X – No resistance
0 – No data
J – Heavy flammable (Yes)
N – Not flammable (No)

Table 3. Chemical resistance of semi–flexible Thermovent air ducts

Air duct type	
Thermovent, Thermovent Aero, Thermovent Flex, Thermovent Aero Flex	
Ammonium hydroxide	Resistant
Nitric acid	Up to 30 %, 100°C
Barium chloride, dehydrate	Up to 20 %, 100° C
Isopropyl alcohol	Resistant
Hydrochloric acid	Up to 1 %, 50°C
Potassium chromate	Resistant
Potassium bichromate	Resistant
Potassium hydroxide	Up to 50 %, 20°C
Fuel oil	Resistant
Caustic soda	Up to 40 %, 90°C
Sulphuric acid	Up to 3 %, 50°C
Toluene	Resistant

Air duct mounting

Correct air duct connection is of significant importance to ensure reliable operation and aerodynamic characteristics of mounted air ducts.
Flexible air ducts are connected to basic ventilation system components by various fittings or connected directly to final components as ventilation grilles, disk valves and fans.
A wide range of VENTS fittings is designed to consider variety of manifold air duct connections and facilitate mounting works a lot.

Tools and materials for air duct mounting

- Construction meter
- Marker
- Cutting knife
- Flat-nose pliers or cutting pliers
- Gloves (for work with insulated air ducts)
- Cross-point screwdriver for clamp fixing
- Mounting tape
- Fixing clamps

General rules

- Mounted air duct must be stretched to the maximum to avoid pressure loss
- Air duct must not be deflected and sagged.
- Keep bend radius as large as possible because the minimum air bend increases pressure drop. To level up this effect the bend radius must be equal to the double air duct diameter.
- Provide grounding during mounting operations as static electricity can be accumulated during transportation of air containing organic solvents along the air ducts.
- Air flow in the air duct must have spiral motion.
- Use metal connectors or reducers in case of layout through wall constructions.
- Take precautions not to deform or damage air duct during mounting.

Warning! To avoid deformation stretch Aluvent air ducts gradually from the middle to the ends.



Air duct cutting

- Calculate the air duct length in such a way as to omit any sagging as mounted.
- Stretch the air duct to its maximum.
- Measure the required length and mark it.
- For non-insulated air ducts: cut air duct along a spiral turn with a sharp knife or scissors and cut the wire with cutting pliers.
- For insulated air ducts: first cut the outer sleeve with scissors. Use gloves for that.

Connection to final component

- Connect the air duct to the ventilation grille flange or fan branch pipe with respect to the spiral air motion.
- Fix it with clamps. Use respective diameter clamps. Make sure that the air duct is not deformed in the attaching points.

Mounting with fittings

- Connect the air duct to a fitting by spiral turns, the branch pipe length for connection to the air duct must be at least 50 mm. Seal the joint with a mounting tape if required.
- Fix it with a fixing clamp.

Mounting of non-insulated air ducts

- Cover the branch pipe with the air duct at least by 50 mm by spiral turnings over the air duct. Seal the joint with a mounting tape if required.
- Fix the air duct with a fixing clamp.



Mounting of insulated air duct

① Cover the branch pipe with the air duct at least by 50 mm by spiral turnings over the air duct.
② Pull off the insulation material. Seal the joint with a mounting tape if required.
③ Fix the air duct with a fixing clamp.
④ Pull away the insulation material.
- Fix the outer shell with a mounting tape by wrapping it twice around the air duct.

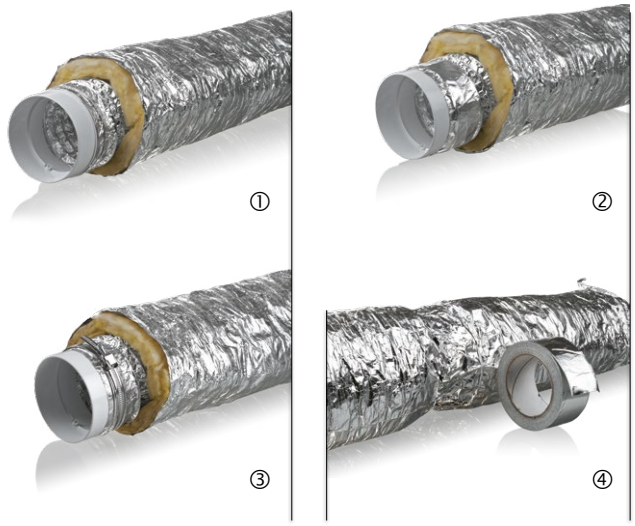

Suspension points

- Maximum sagging of the air duct between two suspension points must not exceed 50 mm/m (fig. 1 a).
- Distance between two suspension points ranges between 1.5 to 3 m depending on the air duct type (fig. 1 b).
- Effective span distance for the flexible air duct must be 1 meter (fig. 1 b).
- In case of vertical air duct layout the distance between the fixing clamps shall be from 1 m to 1.8 m (fig. 1 d).

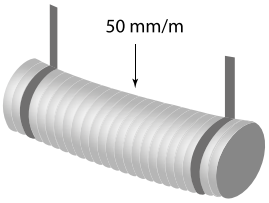

fig. 1 a

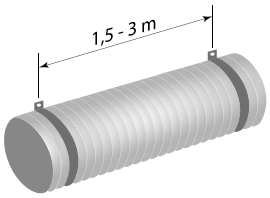

fig. 1 b

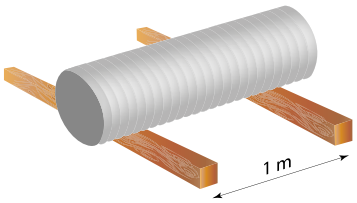

fig. 1 c

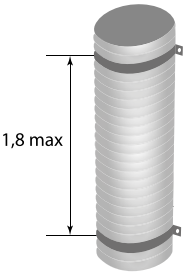

fig. 1 d

Air duct application and use recommendations

- Flexible air ducts are not recommended for use in vertical shafts above 2 floors high.
- In case of application of the flexible air duct in high temperature operating conditions make sure that the air duct temperature resistance is suitable for the specific operating conditions.
- During installation in fireproof constructions of the floors/ceilings the air ducts must comply with fire safety requirements.
- Flexible air ducts are not suitable for routing through the floor or below ground. Contact with ground is not allowed.
- Use only specially designed air ducts for external mounting.
- Air ducts must be mounted far away enough from the places with excessive heat generation.
- Application scope of flexible air ducts can be limited by national norms and standards. Read information on air duct application and technical data before using the air ducts!

Polyvent 605 series



605 M0
605 M1



6051 M0
6051 M1

Flexible non-insulated aluminium foil air ducts with steel wire frame

Description

- Flexible air duct from aluminium foil laminated with polyether.
- Spiral frame from high-carbon steel wire.

Features

- Pollution-free, no harmful substances emission during operation.
- No chlorine and cadmium content.
- high elasticity and temperature resistance: short-time resistance up to +250°C for M0, shorttome resistance up to +150°C for M1.
- High rupture and mechanical resisting features.

Recommended application

- Applied in residential and industrial ventilation, air conditioning and heating systems, peripheral sections of large central utility systems with the maximum pressure 3000 Pa and special fire-resistance requirements to air ducts (M0 or M1 models).
- Recommended for ventilation of child care centres, educational and medial facilities, spa resorts.

Technical data

Item	605 M0, 605 M1	6051 M0, 6051 M1
Range of sizes [mm]	Ø 102; 127; 152; 182; 203; 254; 315	110x54; 60x204
Air duct base	Aluminium foil laminated with polyester film	
Air duct wire	steel spring, 0.8-1.5 mm thick	
Safety class	incombustible (for M0 model), self-extinguishing (for M1 model)	
Operating temperature range [°C]	-30 ... +250 (for M0 model), -30 ... +150 (for M1 model)	
Standard length [m]	10	
Available lengths (cutting) [m]	1; 1.5; 2.5; 3; 6	7.6; 10
Air speed [m/s]	30	
Maximum operating pressure [Pa]	3000	

Colour range



Aluminium
(_)

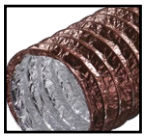

Brown
(B)

Packing



Cardboard box



Unit coloured packing

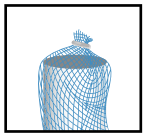

Net

Order code

Polyvent | Series | type | / | Ø | / | length | – | colour

- Series: 605, 6051
- type: M0, M1
- length: 1; 1.5; 2.5; 3; 6; 7.6; 10
- colour: _ – Aluminium; B – brown

Accessories

Diffusers and air disk valves



Grilles and hoods



Backdraft dampers



Fittings



Clamps



Polyvent N
series



Flexible non-insulated air ducts with steel wire frame covered with metalized polyester film

Description

- Flexible air duct from metalized polyester film.
- Spiral frame from high-carbon steel wire.

Features

- Pollution-free flexible non-insulated air duct. No harmful substances emission during operation.
- high elasticity and temperature resistance: short-time resistance up to +120°C.

Recommended application

- Applied in residential and industrial ventilation, heating and air conditioning systems with no special requirements to the combustibility and temperature resistance, in heat accumulation units and peripheral sections of large central utility systems with the maximum pressure 3000 Pa.
- Recommended for ventilation of child care centres, educational and medial facilities, spa resorts.

Technical data

Item	Polyvent N
Range of sizes [mm]	Ø 82; 102; 127; 152; 182; 203; 254; 315; ...630
Air duct base	metalized polyester film (45 µm)
Air duct wire	steel spring, 0.8-1.5 mm thick
Operating temperature range [°C]	-30...+120
Standard length [m]	1; 1.5; 3; 7.6
Available lengths (cutting) [m]	1; 1.5; 3; 7.6
Air speed [m/s]	30
Maximum operating pressure [Pa]	3000

Colour range



Aluminium
(_)

Packing



Cardboard box



Unit coloured packing

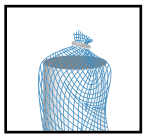

Net

Order code

Polyvent N Ø / length

Accessories

Diffusers and air disk valves



Grilles and hoods



Backdraft dampers



Fittings



Clamps



Isovent N
series



Flexible insulated air ducts with steel wire frame covered with metalized polyester film

Description

- Flexible insulated air duct from metalized polyether film.
- Spiral frame from high-carbon steel wire.

Features

- Pollution-free flexible air duct insulated with mineral wool layer.
- No harmful products emission during operation.
- No chlorine and cadmium content.
- High elasticity and temperature resistance: short-time resistance up to +120°C.

Recommended application

- Applied in residential and industrial ventilation, air conditioning and heating systems with special flammability and temperature resisting requirements, in particular for application with the need of heat insulation combined with flexible air ducts to prevent condensate generation and heat and cold losses as well as in peripheral sections of large central utility systems with the maximum pressure 3000 Pa.
- Recommended for ventilation of child care centres, educational and medial facilities, spa resorts.

Technical data

Item	Isovent N
Range of sizes [mm]	Ø 82; 102; 127; 152; 162; 182; 203; 254; 315; ...630
Air duct base	metalized polyester film (45 µm)
Air duct wire	steel spring, 0.8-1.5 mm thick
Insulation	Mineral wool, 25 mm
Outer sleeve	metalized polyester film (45 µm)
Operating temperature range [°C]	-30...+120
Standard length [m]	7.6
Available lengths (cutting) [m]	7.6
Air speed [m/s]	30
Maximum operating pressure [Pa]	3000

Colour range



Aluminium
(_)

Packing



Cardboard box

Order code

Isovent N Ø / length

Accessories

Diffusers and air disk valves



Grilles and hoods



Backdraft dampers



Fittings



Clamps



Polyvent 660 series





Flexible PVC film
non-insulated air ducts
with steel wire frame (65 µm)

Description

- Flexible PVC air duct with spiral high-carbon steel wire frame.

Features

- High compression ratio.
- Heavy-flammable, flame-retarding, self-extinguishing.

Recommended application

- Applied in residential and commercial ventilation systems.
- The ideal solution for ventilation of living quarters and office premises.

Technical data

Item	660	6601
Range of sizes [mm]	Ø 82; 102; 127; 152	110x55; 60x204
Air duct base	PVC film (65 µm)	
Air duct wire	steel spring, 0.8 mm thick	
Operating temperature range [°C]	-18...+70	
Standard length [m]	1; 1.5; 3; 6	1; 1.5; 3; 6
Available lengths (cutting) [m]	1; 1.5; 2.5; 3; 6; 15 (only for Ø 82/102/127)	1; 1.5; 3; 6
Air speed [m/s]	30	
Maximum operating pressure [Pa]	3000	

Colour range



White
(_)

Packing



Cardboard box



Unit coloured packing

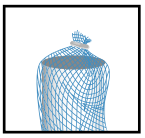

Net

Order code

Polyvent | **type** | **size** | / | **length**

660
6601

Accessories

Diffusers and air disk valves



Grilles and hoods



Backdraft dampers



Fittings



Clamps



Polyvent 665-Comby series



Flexible non-insulated air ducts with steel wire frame covered with aluminium foil and polyether

Description

- Flexible heavy-duty air duct from multilayer aluminium foil, polyether and PVC with high-carbon steel wire frame.

Features

Versus PVC foil air ducts:

- High temperature resistance;
- non-flammable internal layer, fire safety class M0 (up to 250 °C) or M1 (up to 150 °C).

Versus aluminium foil air ducts:

- High rupture resistance;
- better protection against outside mechanical impact;
- airtight, expansion- and deformation resisting.

Recommended application

- Applied in residential ventilation and air conditioning systems of living quarters, administrative and public premises.

Technical data

Item	Polyvent 665-Comby
Range of sizes [mm]	Ø 102.127; 152;
Air duct, internal layer	Aluminium foil laminated with polyester film incombustible (for M0 model), self-extinguishing (for M1 model)
Air duct, external layer	PVC
Air duct wire	steel spring, 0.8-2 mm thick
Operating temperature range [°C]	-30 ... +250 (for M0), -30 ... +150 (for M1)
Standard length [m]	1; 1.5; 2; 2.5; 3; 6; 10
Available lengths (cutting) [m]	1; 1.5; 2; 2.5; 3; 6; 10
Air speed [m/s]	30
Maximum operating pressure [Pa]	3000

Colour range



White (_)

Packing



Cardboard box



Unit coloured packing

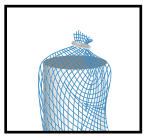

Net

Order code

Polyvent 665 – Comby | fire safety class | Ø | / | length

fire safety class: M0, M1

Accessories

Diffusers and air disk valves



Grilles and hoods



Backdraft dampers



Fittings



Clamps



Pressure loss diagram per 1 m stretched air duct

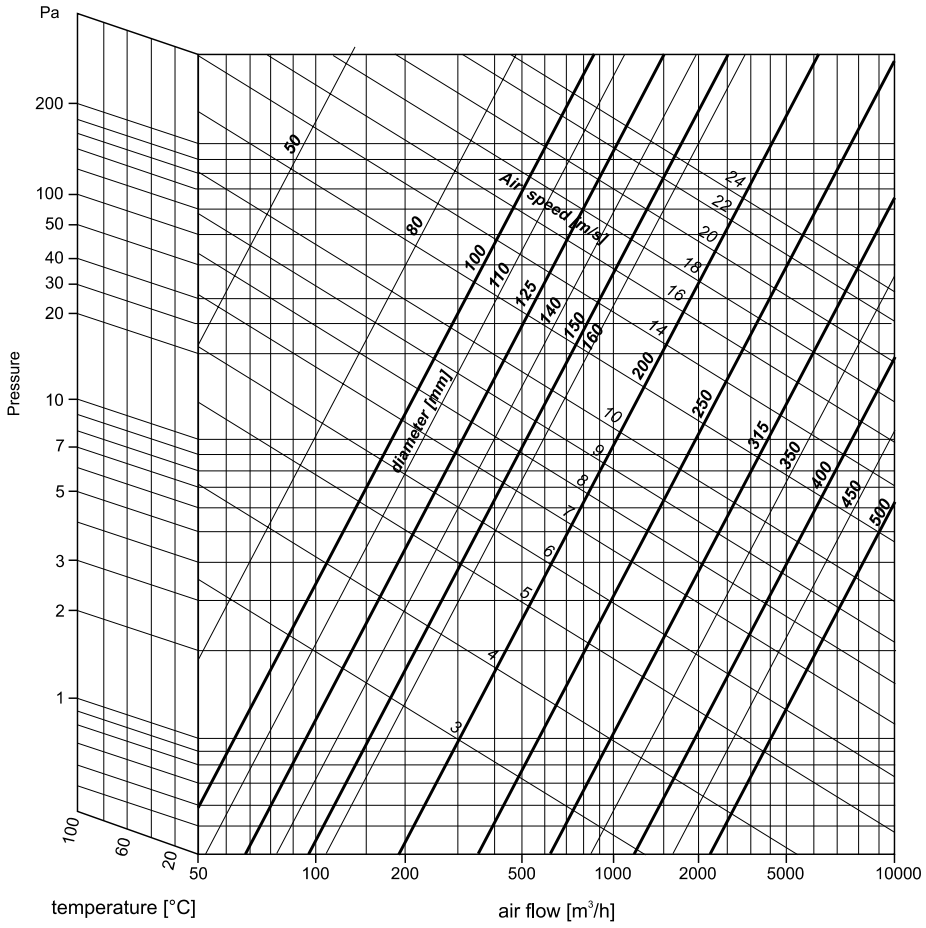

Calculation example

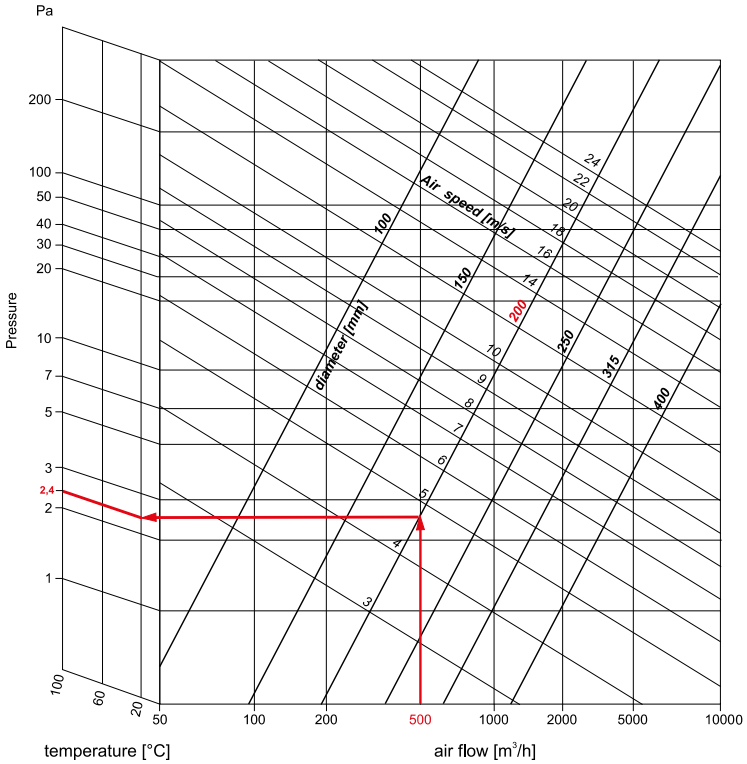

- Select a curve that matches the air duct diameter [mm], 200 mm in this case.
- Find the intersection point of this line with the vertical line of the required air flow in m³/h, 500 m³/h in this case.
- The horizontal line that shows the pressure loss in Pa per 1 m straight air duct crosses this intersection point.
- Multiply pressure loss value (2.4 Pa/m at 20°C) by total air duct length to get the total pressure loss value. To calculate pressure loss in case of bends consider each bend as extra air duct meter.

AIR DUCTS FOR VENTILATION, HEATING AND AIR CONDITIONING

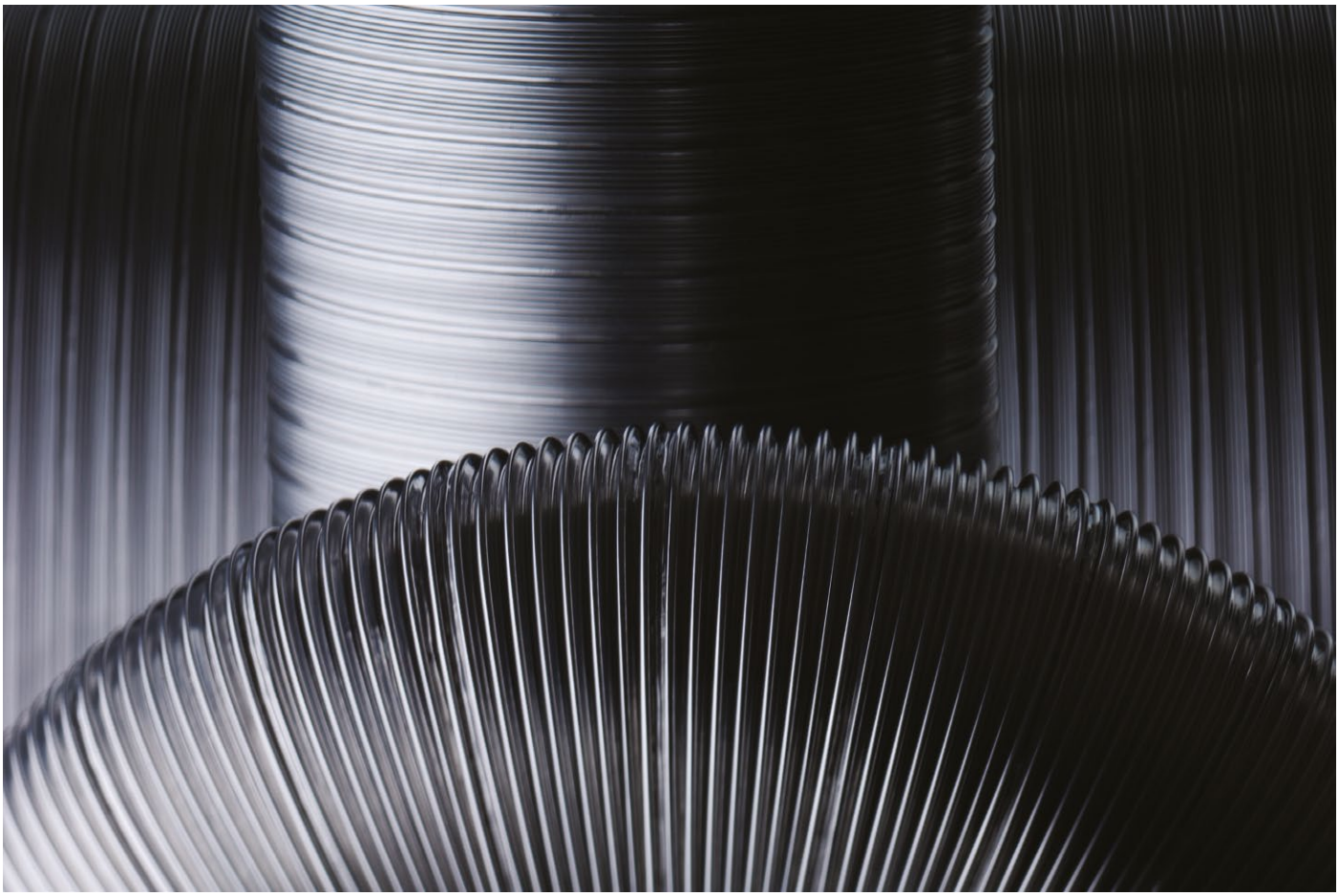

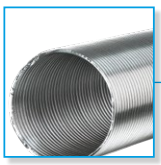

Non-insulated air ducts Aluvent series

Aluminium foil

page 340

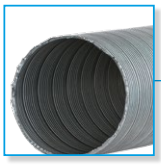

Non-insulated air ducts Thermovent series

galvanized and stainless steel

page 341

Aluvent
series

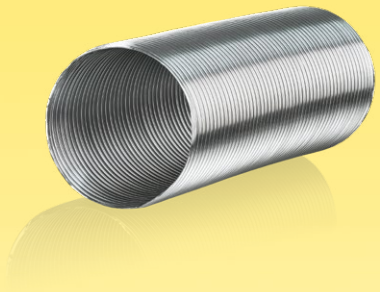

Semi-flexible aluminium air ducts

Description

- Flexible spiral seam aluminium band air ducts with high aerodynamic and strength characteristics.

Features

- Made of incombustible, corrosion-resisting aluminium band.
- Specially designed high-quality locks ensure high seam tightness and total air tightness of the ducts.
- Low dynamic losses.
- Low weight, high elasticity and easy mounting.

Recommended application

- Applied in residential and industrial ventilation, air conditioning and heating systems with the maximum pressure 10 000 Pa.
- For supply and exhaust ventilation.

Technical data

Item	Aluvent M	Aluvent N	Aluvent S	Aluvent D
Diameter range [mm]	80/100/110/120/125/130/140/150/160/180/200/250/315			
Material	Aluminium			
Number of layers	1	1	1	2
Total thickness [µm]	50	80	100	2x50
Operating temperature range [°C]	-30…+ 250			
Maximum air speed [m/s]	30			
Maximum operating pressure [Pa]	8 000	10 000	10 000	10 000
Minimum bend radius [mm]	0.7xD	0.73xD	0.76xD	0.85xD
Length [m]	1; 2; 2.5; 3; 6			

Packing



Thermal packing



Polyethylene bag



Cardboard box

Order code

Aluvent | **type** | Ø | / | **length**

M
N
S
D

Accessories

Diffusers and air disk valves



Grilles and hoods



Backdraft dampers



Fittings



Clamps



Thermovent series

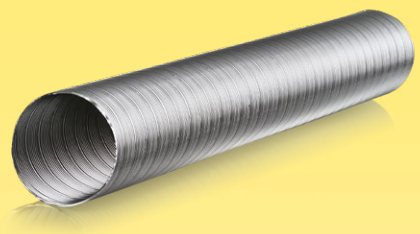

Semi-flexible galvanized or stainless steel air ducts

Description

- Semi-flexible stainless or galvanized steel spiral seam air ducts with high aerodynamic and strength characteristics.

Features

- Made of incombustible, corrosion-resisting stainless steel or galvanized steel band.
- Increased thermal resistance (up to 700°C).
- Superdense high-quality triple locks ensure high seam tightness and total air tightness of the ducts.
- Low dynamic losses.
- Low weight and easy mounting.

Recommended application

- Applied in residential and industrial ventilation, air conditioning and heating systems with the maximum pressure 10 000 Pa.
- For supply and exhaust ventilation.
- Applied in the systems of hot air removal from boiler houses and smoke exhaust systems.

Technical data

Item	Thermovent N
Diameter range [mm]	80/100/110/120/125/130/140/150/160/180/200/250/315
Material	Stainless steel
Number of layers	1
Total thickness [µm]	80
Operating temperature range [°C]	-30…+700
Maximum air speed [m/s]	30
Maximum operating pressure [Pa]	10 000
Minimum bend radius [mm]	3xD
Length [m]	1; 2; 3; 6

Packing



Cardboard box

Order code

Thermovent | type | Ø | / | length | material

type: N, S

material: _ – by default (Stainless steel), Zn – galvanized steel

Accessories

Diffusers and air disk valves



Grilles and hoods



Backdraft dampers



Fittings



Clamps



Pressure loss diagram per 1 m stretched air duct

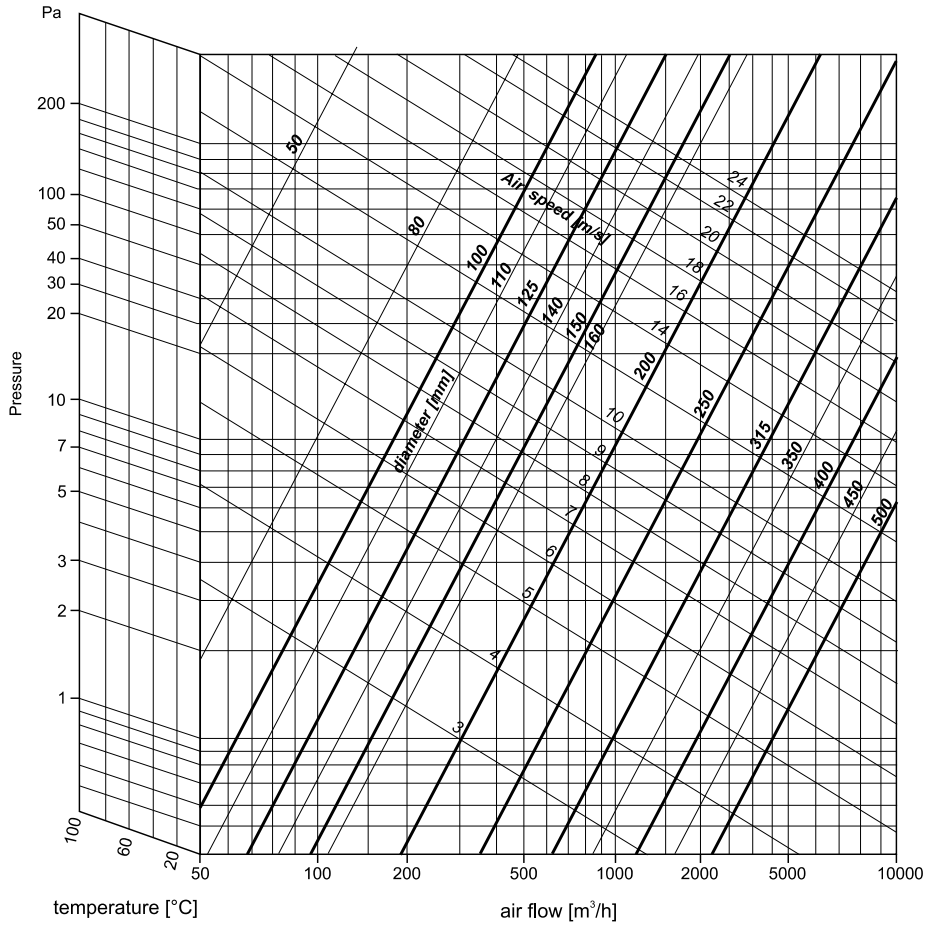

Calculation example

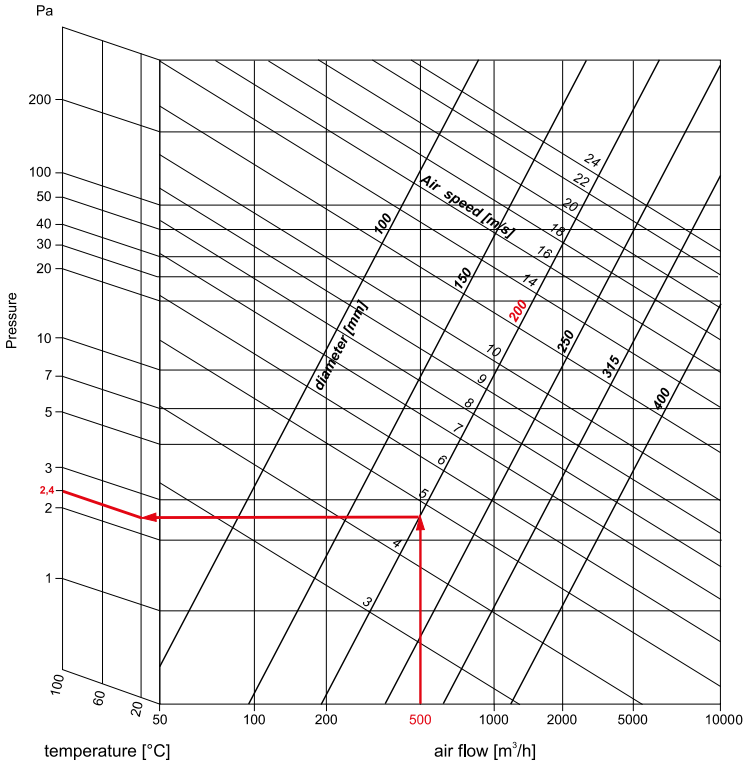

- Select a curve that matches the air duct diameter [mm], 200 mm in this case.
- Find the intersection point of this line with the vertical line of the required air flow in m³/h, 500 m³/h in this case.
- The horizontal line that shows the pressure loss in Pa per 1 m straight air duct crosses this intersection point.
- Multiply pressure loss value (2.4 Pa/m at 20°C) by total air duct length to get the total pressure loss value. To calculate pressure loss in case of bends consider each bend as extra air duct meter.

FITTINGS



Cross Tee
KM Series
with polymeric coating
page 346



Cross Tee
KM...Zn Series
galvanized steel
page 346



T-joint
TM Series
with polymeric coating
page 347



T-joint
TM...Zn Series
galvanized steel
page 347



Y-shaped T-joint
TMY Series
with polymeric coating
page 348



Y-shaped T-joint
TMY...Zn Series
galvanized steel
page 348



Reducer
RM Series
with polymeric coating
page 349



Reducer
RM...Zn Series
galvanized steel
page 349



Flange
FM Series
with polymeric coating
page 350



Flange
FM...Zn Series
galvanized steel
page 350



Reducer
FMK Series
with polymeric coating
page 351



Reducer
FMK...Zn Series
galvanized steel
page 351

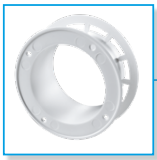

Flange
F Series
with polymeric coating
page 352



Flange
FK Series
galvanized steel
page 352



Reducer
PM series
with polymeric coating
page 353



Reducer
PM...Zn series
galvanized steel
page 353



Mounting kit
NM Isovent Series
page 354



Clamps
page 356



Mounting tapes
page 358

KM
Series



KM…Zn
Series



Application

- For branch connections of the air ducts used in residential, public and industrial ventilation systems.
- For connection of various air ducts and their integration into complex ventilation systems.

Design

- Made of special steel with polymeric coating (**KM** series) or galvanized steel (**KM…Zn** series).
- The cross tee is designed for connection of 4 air ducts of the same diameter at 90° angle.
- The cross tee model **KM 125/160** is equipped with two Ø 125 mm and two Ø 160 mm flanges.
- Ventilation system components are fixed by clamps or any other fixing devices.

Overall dimensions

Model		Dimensions [mm]		
		D1	D2	B
KM 80	KM 80 Zn	80	80	170
KM 100	KM 100 Zn	100	100	190
KM 110	KM 110 Zn	110	110	200
KM 120	KM 120 Zn	120	120	210
KM 125	KM 125 Zn	125	125	215
KM 125/160	KM 125/160 Zn	125	160	215
KM 130	KM 130 Zn	130	130	220
KM 140	KM 140 Zn	140	140	230
KM 150	KM 150 Zn	150	150	240
KM 160	KM 160 Zn	160	160	250
KM 180	KM 180 Zn	180	180	260
KM 200	KM 200 Zn	200	200	300
KM 250	KM 250 Zn	250	250	350
KM 315	KM 315 Zn	315	315	415

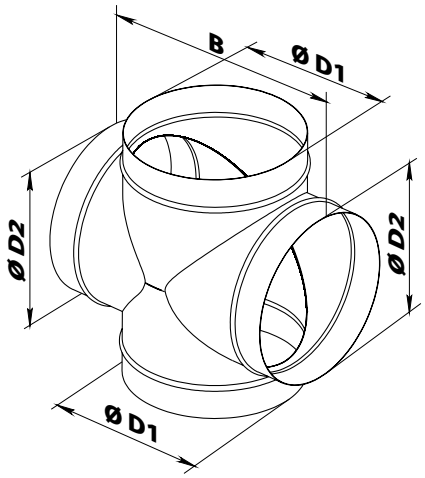

Accessories



TM
Series



TM…Zn
Series



Application

- For branch connections of the air ducts used in residential, public and industrial ventilation systems.
- For connection of various air ducts and their integration into complex ventilation systems.

Design

- Made of special steel with polymeric coating (**TM** series) or galvanized steel (**TM…Zn** series).
- The T-joint is designed for connection of 3 air ducts at 90° angle.
- The **TM 125/160** T-joint model is equipped with two â 125 mm flanges and one â 160 mm flange.
- Ventilation system components are fixed by clamps or any other fixing devices.

Overall dimensions

Model		Dimensions [mm]		
		D1	D2	B
TM 80	TM 80 Zn	80	80	170
TM 100	TM 100 Zn	100	100	190
TM 110	TM 110 Zn	110	110	200
TM 120	TM 120 Zn	120	120	210
TM 125	TM 125 Zn	125	125	215
TM 125/160	TM 125/160 Zn	125	160	215
TM 130	TM 130 Zn	130	130	220
TM 140	TM 140 Zn	140	140	230
TM 150	TM 150 Zn	150	150	240
TM 160	TM 160 Zn	160	160	250
TM 180	TM 180 Zn	180	180	260
TM 200	TM 200 Zn	200	200	300
TM 250	TM 250 Zn	250	250	350
TM 315	TM 315 Zn	315	315	415

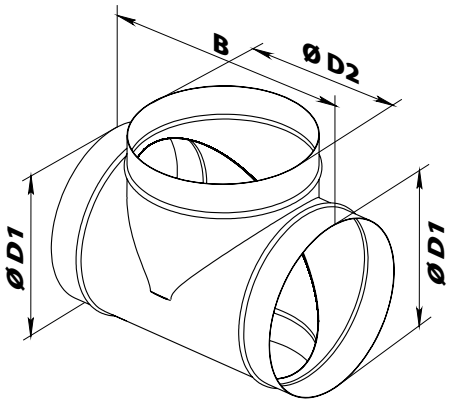

Accessories



TMY
Series



TMY...Zn
Series



Application

- For branch connections of the air ducts used in residential, public and industrial ventilation systems.
- For connection of various air ducts and their integration into complex ventilation systems.

Design

- Made of special steel with polymeric coating (**TMY** series) or galvanized steel (**TMY...Zn** series).
- The T-joint is designed for connection of 3 air ducts with the same diameter at 120° angle.
- Ventilation system components are fixed by clamps or any other fixing devices.

Overall dimensions

Model		Dimensions [mm]	
		D	B
TMY 80	TMY 80 Zn	80	170
TMY 100	TMY 100 Zn	100	190
TMY 110	TMY 110 Zn	110	200
TMY 120	TMY 120 Zn	120	210
TMY 125	TMY 125 Zn	125	215
TMY 130	TMY 130 Zn	130	220
TMY 140	TMY 140 Zn	140	230
TMY 150	TMY 150 Zn	150	240
TMY 160	TMY 160 Zn	160	250
TMY 180	TMY 180 Zn	180	260
TMY 200	TMY 200 Zn	200	300
TMY 250	TMY 250 Zn	250	350
TMY 315	TMY 315 Zn	315	415

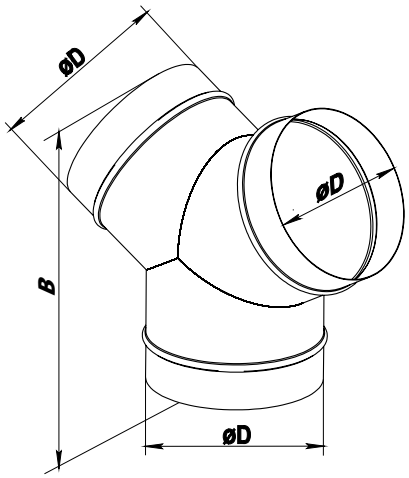

Accessories

Diffusers and air disk valves



Grilles and hoods



Backdraft dampers



Clamps



Air ducts



Mounting tapes

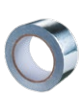

RM
Series



RM...Zn
Series



Application

- For branch connections of the air ducts used in residential, public and industrial ventilation systems.
- For connection of various air ducts and their integration into complex ventilation systems.
- For connection of two various air duct diameters.

Design

- Made of special steel with polymeric coating (**RM** series) or galvanized steel (**RM...Zn** series).
- The reducer is designed for connection of two air ducts with various diameters.
- Ventilation system components are fixed by clamps or any other fixing devices.

Overall dimensions

Model		Dimensions [mm]		
		D	D1	L
RM 80/100	RM 80/100 Zn	80	100	115
RM 100/125	RM 100/125 Zn	100	125	125
RM 100/120	RM 100/120 Zn	100	120	125
RM 125/150	RM 125/150 Zn	125	150	125
RM 125/160	RM 125/160 Zn	125	160	144
RM 150/160	RM 150/160 Zn	150	160	172
RM 150/200	RM 150/200 Zn	150	200	172
RM 160/200	RM 160/200 Zn	160	200	154
RM 200/250	RM 200/250 Zn	200	250	172
RM 250/315	RM 250/315 Zn	250	315	195

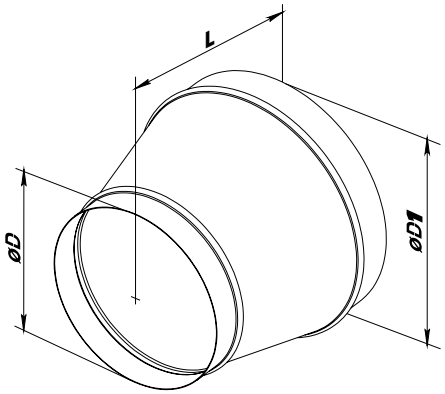

Accessories

Diffusers and air disk valves



Grilles and hoods



Backdraft dampers



Clamps



Air ducts



Mounting tapes

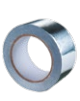

FM Series



FM...Zn Series

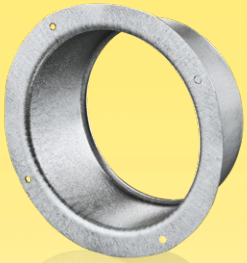

Application

- For connection of flexible and plastic air ducts of the respective diameter.
- For wall or ceiling mounting.

Design

- Made of special steel with polymeric coating (**FM** series) or galvanized steel (**FM...Zn** series).
- Fixing to wall or ceiling with screws.

Overall dimensions

Model		Dimensions [mm]		
		D	D1	L
FM 80	FM 80 Zn	80	116	62
FM 100	FM 100 Zn	100	136	62
FM 110	FM 110 Zn	110	146	62
FM 120	FM 120 Zn	120	156	62
FM 125	FM 125 Zn	125	162	62
FM 130	FM 130 Zn	130	166	62
FM 140	FM 140 Zn	140	176	62
FM 150	FM 150 Zn	150	186	62
FM 160	FM 160 Zn	160	196	62
FM 180	FM 180 Zn	180	206	62
FM 200	FM 200 Zn	200	236	62
FM 250	FM 250 Zn	250	286	62
FM 315	FM 315 Zn	315	351	62

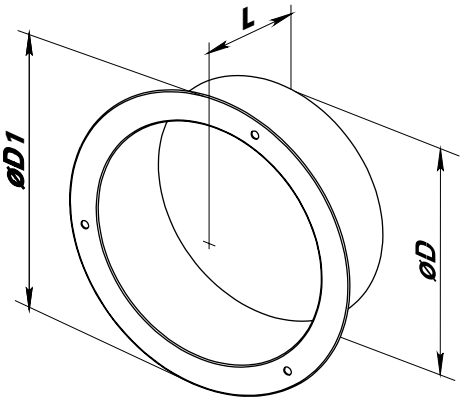

Accessories

Diffusers and air disk valves



Grilles and hoods



Backdraft dampers



Clamps



Air ducts



Mounting tapes



FMK
Series



FMK...Zn
Series



Application

- For connection of flexible and plastic air ducts of the respective diameter.
- For wall or ceiling mounting.

Design

- Made of special steel with polymeric coating (**FMK** series) or galvanized steel (**FMK...Zn** series).
- The flanges are equipped with a rectangular connecting plate.
- Fixing to wall or ceiling with screws.

Overall dimensions

Model		Dimensions [mm]			
		H	B	D	L
FMK 80	FMK 80 Zn	130	114	80	50
FMK 100	FMK 100 Zn	150	134	100	50
FMK 110	FMK 110 Zn	158	142	110	50
FMK 120	FMK 120 Zn	162	146	120	50
FMK 125	FMK 125 Zn	170	156	125	50
FMK 130	FMK 130 Zn	180	164	130	50
FMK 140	FMK 140 Zn	190	174	140	50
FMK 150	FMK 150 Zn	204	188	150	50
FMK 160	FMK 160 Zn	210	194	160	50
FMK 180	FMK 180 Zn	220	204	180	50
FMK 200	FMK 200 Zn	250	234	220	50
FMK 250	FMK 250 Zn	300	284	250	50
FMK 315	FMK 315 Zn	360	344	315	50

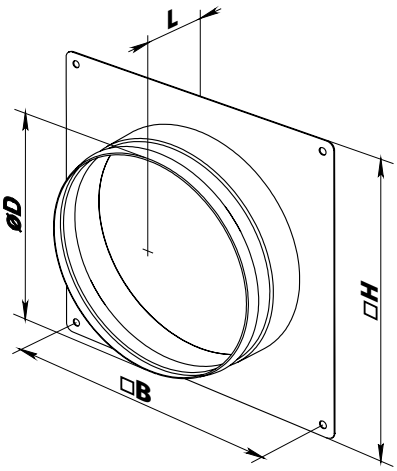

Accessories



F 100 – F 200
Series



FK
Series



F 250 – F 315
Series

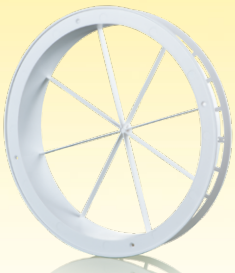

Application

- For connection of flexible air ducts, plastic ducts and air disk valves of suitable diameter without flanges.
- For wall or ceiling mounting.

Design

- Made of high-quality plastic.
- **F** Series flanges are equipped with a retaining ring for fixation of flexible air ducts.
- The flange model **F 200/150** can be used as a connector for the air disk valves A 200 VR and A 200 R.
- **F 250** and **F 315** flanges are equipped with an extra X-deflector to reinforce the flange.
- **FK** Series flanges are equipped with a connecting plate.
- Fixing to wall or ceiling with screws.

Overall dimensions

Model	Dimensions [mm]			
	D	D1	D2	L
F 80	80	115	120	62
F 100	100	132	139	62
F 125	125	157	165	62
F 150	150	179	188	62
F 200	200	232	240	62
F 200/150	150	200	179	85
F 250	250	283	290	62
F 315	315	360	356	62

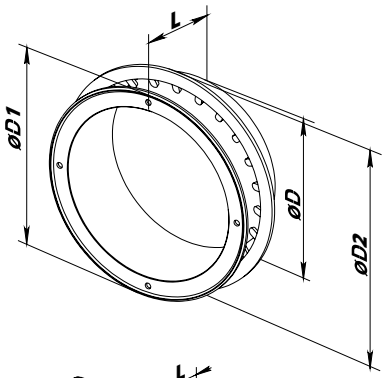

Model	Dimensions [mm]			
	H	B	D	L
FK 100	185	169	100	34
FK 120	185	169	120	34
FK 125	185	169	125	34

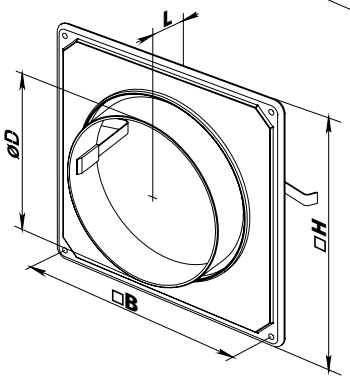

Accessories



PM
Series



PM...Zn
Series



Application

- For connection of flexible air ducts of the respective diameter.

Design

- Made of special steel with polymeric coating (**PM** series) or galvanized steel (**PM...Zn** series).
- Fixing with clamps.

Overall dimensions

Model		Dimensions [mm]	
		D	L
PM 80	PM 80 Zn	80	62
PM 100	PM 100 Zn	100	62
PM 110	PM 110 Zn	110	62
PM 120	PM 120 Zn	120	62
PM 125	PM 125 Zn	125	62
PM 130	PM 130 Zn	130	62
PM 140	PM 140 Zn	140	62
PM 150	PM 150 Zn	150	62
PM 160	PM 160 Zn	160	62
PM 180	PM 180 Zn	180	62
PM 200	PM 200 Zn	200	62
PM 250	PM 250 Zn	250	62
PM 315	PM 315 Zn	315	62

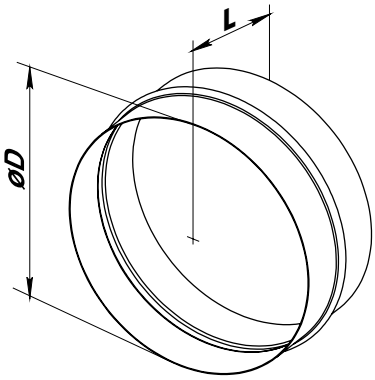

Accessories



NM Isovent
Series



Use

- NM Isovent mounting kits are designed for simple and comfortable connection of heat-insulated air ducts to the spigots of various VENTS ventilation equipment. The mounting kit consists of flanges and matching self-drilling screws as well as mounting clamps for air duct fixation.
- The flanges of NM Isovent mounting kit ensure tight connection of all the heat-insulated air duct components to the ventilation equipment spigots and prevent insulation delamination in the connection points.
- The flanges of NM Isovent mounting kit are made of high-quality impact-resistant polystyrene. The flanges are connected to the ventilation equipment spigots with self-drilling screws with drill.

Modifications

- NM Isovent mounting kits are available in two modifications:

NM Isovent 125 – compatible with round Ø 125 mm air ducts;

NM Isovent 150 – compatible with round Ø 150 mm air ducts;

Design

Overall dimensions

Model	D1, mm	D2, mm
NM Isovent 125	129	141
NM Isovent 150	154	170

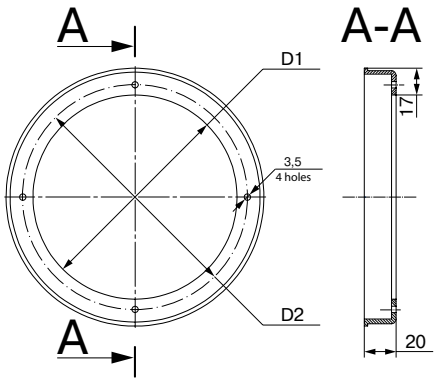

Delivery set

NM Isovent mounting kit delivery set includes:

- Flange	2 items	
- Self-drilling screws with drill		8 items
- Mounting clamp	2 items	
- Packing	1 item	

Mounting example of the heat-insulated air ducts with NM Isovent mounting kit



Cover the air handling unit spigots with the flanges from NM Isovent mounting kit and fix those with self-drilling screws with drill.



Cover the air handling unit spigots with the inner hoses of the heat-insulated air ducts and fix those with metal clamps (special accessory).

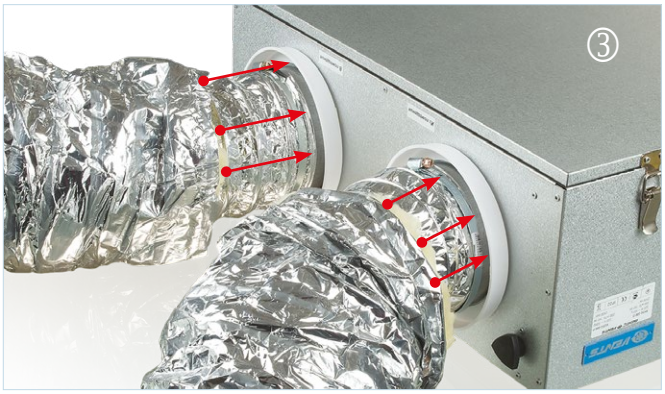

Tuck the inner insulation layer of the air ducts under the flanges of NM Isovent mounting kit.



Cover the flanges of NM Isovent mounting kit with inner hoses of heat-insulated air ducts by pressing the hoses tightly against the air handling unit casing and fixing those with clamps (included into delivery).



Tighten the connection point between the inner hose of the heat-insulated air ducts and the flanges of NM Isovent mounting kit with clamps.



Heat-insulated air ducts have reliable connection to the air handling unit spigots.

The unit is ready to operate!

CZK Series



Application

The quick-release clamps are designed for quick and reliable connection of various round ventilation system components.

Design

The clamp is made of galvanized steel band and sealed with foamed rubber on the internal side for vibration reducing. The clamp is suitable for wall or ceiling mounting.

Overall dimensions

Model	Dimensions [mm]		Weight [kg]
	ØD	L	
CZK 100	100	204	0.21
CZK 125	125	229	0.22
CZK 150	150	254	0.25
CZK 160	160	264	0.26
CZK 200	200	304	0.31
CZK 250	250	354	0.35
CZK 315	315	419	0.42

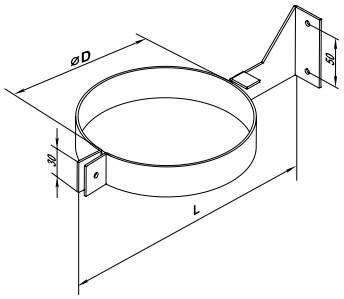

CZ Series



Application

The quick-release clamp is designed for quick and reliable connection of spigots and round-section ventilation system elements (for example, filters, heaters, fans, silencers). The clamp makes it easy to install and remove the fans for maintenance and cleaning.

Design

The clamp is made of galvanized steel band and sealed with foamed rubber on the internal side for better tight connection and vibration reducing. The quick-release clamps are tightened with two bolts.

Overall dimensions

Model	Dimensions [mm]		Weight [kg]
	ØD	H	
CZ 100	100	172	0.206
CZ 125	125	198	0.232
CZ 150	150	224	0.296
CZ 160	160	232	0.358
CZ 200	200	274	0.42
CZ 250	250	326	0.55
CZ 315	315	380	0.65

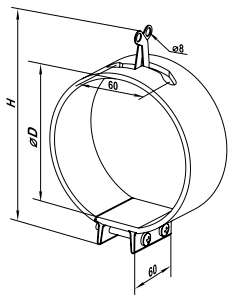

C series (nylon)

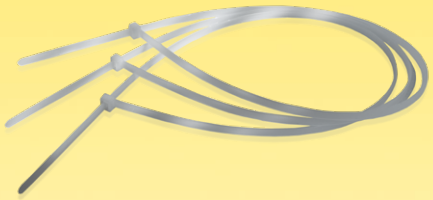

Application

The nylon clamp is one of the fastest, cost-effective and comfortable fixing devices for connection of the air ducts to the branch pipe and interconnection any ductworks. Suitable for operation range from –40°C up to +85°C.

Design

The clamps are made of high quality self-extinguishing nylon with high mechanical durability. The edged locking device provides any diameter fixation. The clamps length varies from 370 mm to 1220 mm and the width from 4.8 to 9 mm. NZC snips can be supplied together with clamps for more comfortable tightening and cutting.

Overall dimensions

Model	Dimensions [mm]		
	ØD	H	L
C 370/100 N	102	4.8	370
C 530/100 N	140	7.6	530
C 710/100 N	190	9	710
C 780/100 N	229	9	780
C 912/100 N	263	9	912
C1220/100 N	365	9	1220



NZC snips

C Series



CB Series



CBR Series



Application

The clamps are designed for quick and reliable mounting and connection of various round ventilation system components. The clamps facilitate installation process and fan removal for servicing and maintenance.

Design

- **C** series clamps are made of stainless steel band and **CZ** series clamps are made of galvanized steel band. The clamps are tightened with a screw.
- **CB** series clamps are the stainless steel quick-release clamps equipped with a stainless steel swing screw. The clamps are tightened with a screw.
- The **CBR 3000** model is a band clamp in plastic casing (roll 30 m x 9 mm x 0.8 mm + 50 locking devices SU 50). Get the required clamp diameter with a clamp band of respective length and a locking device. The clamps are tightened with a screw.

Snip cutters are everything you need to get the required clamp diameter as the plastic casing has a special design and necessary marking.

Use:

1. Bend the edge of the band;
2. Fix the bent end inside the band holder;
3. Turn the band holder up to the required diameter marking on the casing;
4. Cut the band according to the marking on the casing;
5. Fix the locking device on the band clamp.

Overall dimensions

Model	Dimensions [mm]	
	ØD	H
C 100	90-110	9
C 125	110-130	9
C 150	140-160	9
C 160	150-170	9
C 200	190-210	9
C 250	240-260	9
C 315	300-330	9

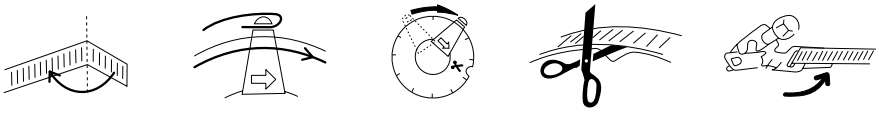

1 2 3 4 5

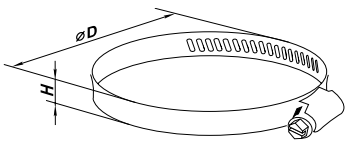



Locking device SU 50 for CBR 3000

Overall dimensions

Model	Dimensions [mm]	
	ØD	H
CB 60-110	60-110	9
CB 60-135	60-135	9
CB 60-165	60-165	9



Easy locking mechanism for the CB and CBR clamps

ALT
Series

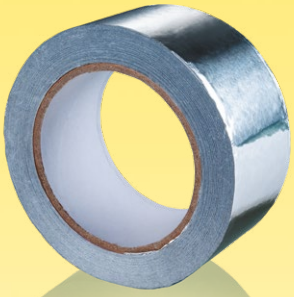

ART
Series

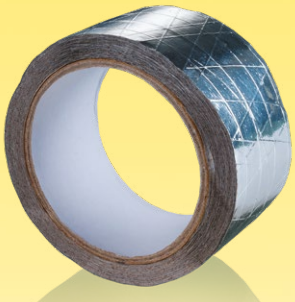

PVT
Series



Application

Insulating material for various construction, repair and mounting operations at ventilation and air conditioning systems.

Insulation and protection of pipeline butt joints, air ducts, casings, assembly units, etc.

Sealing of joints and seams in case of reflecting material insulation to reduce thermal losses.

Reliable protection of equipment components against vapour, dirt and dust penetration. Corrosion protection.

Design

The aluminium adhesive tape ALT is a composite material that consists of aluminium and PET foil covered with glue layer. The tape is supplied in rolls and the glue layer is protected with an extra protecting layer.

The aluminium adhesive tape ART is a composite material that consists of aluminium foil reinforced with PET film and fibreglass that is covered with glue. Due to synthetic fibres the tape has higher mechanical durability as compared to standard adhesive tape.

The adhesive PVC tape is an insulation tape made of plasticized PVC base covered with a glue layer.

- initial good adhesion only increases with time;
- sufficient stability against sliding;
- high thermal resistance;
- high solvent resistance;
- increased UV resistance;
- durability.

ALT and ART tape overall dimensions

	ALT 050/50	ALT 050/10	ART 050/50	ART 050/10
Length [m]	50	10	50	10
Width [mm]	50	50	50	50
Base thickness [µm]	30	30	55	55
Total tape thickness [µm]	32	32	96	96
Breaking force	57 N / 25 mm^2	57 N / 25 mm^2	336 N / 25 mm^2	336 N / 25 mm^2
Elongation at break [no more %]	3	3	6	6
Adhesiveness	8.25 N / 25 mm^2	8.25 N / 25 mm^2	10 N / 25 mm^2	10 N / 25 mm^2
Operating temperature [°C]	+10 ... +40	+10 ... +40	+10 ... +40	+10 ... +40
Max. working area surface [°C]	+100	+100	+100	+100
UV-resistance	yes	yes	yes	yes

PVT tape overall dimensions

Type	Length [m]	Width [mm]	Thickness [mm]
PVT 050/10	10	50	0.18
PVT 050/30	30	50	0.18
PVT 050/50	50	50	0.18

FLAT AND ROUND PVC DUCTWORKS

"Plastivent" air ductwork system is the ideal solution for arrangement of ventilation systems in small and medium-sized residential, office and commercial premises as well for connection of cooker hoods, exhaust hoods, cowls and other exhaust equipment. It includes rectangular 55x110, 60x120, 60x204 mm air ducts, round Ø 100, 125, 150, 200 mm air ducts and a great variety of fittings such as bends, reducers, connectors, etc. Operation temperature from -30 °C up to +70 °C.

Basic advantages of "Plastivent" system:

- A great variety of fittings designed for assembly of complex ductworks with any geometry based exclusively on "Plastivent" system components.
- Smooth inner duct surface provides low air resistance.
- Corrosion resistant properties ensure long service life.
- Low weight.
- Ventilation system based on "Plastivent" air ducts produces lower noise level as compared to other systems with corrugated or steel air ducts.
- Low thermal conductivity.
- Environmentally friendly plastic used for manufacture of "Plastivent" system does not sustain combustion.

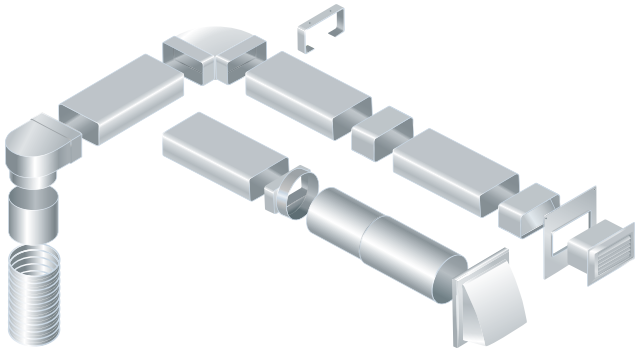

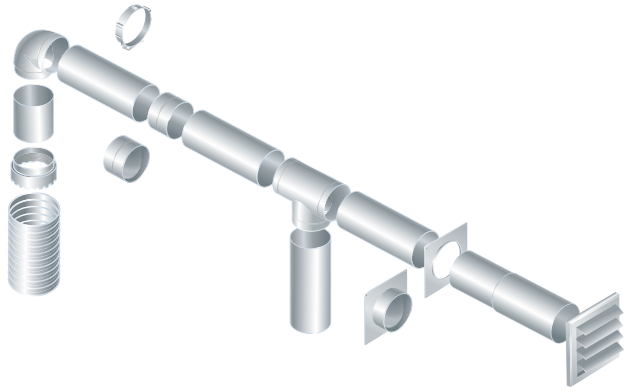

- Extremely easy mounting due to no complicated assembly operations and special tools.
- Small overall dimensions of the rectangular components allow using the system in limited area above false ceilings.
- Aesthetic view makes the system suitable for mounting in ready-made premises.

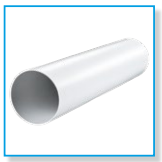

page 370

Round duct



page 371

Round telescopic duct



page 371

90° bend for round ducts



page 372

45° bend for round ducts



page 372

T-joint for round ducts



page 372

Wall plate for round ducts



page 373

Round duct connector



page 373

Connector with backdraft damper for round ducts



page 374

Connector with back-draft damper and wall plate for round ducts



page 374

Connector with plate for round ducts



page 375

Reducer



page 376

Reducer



Step round reducer

page 376



Step round reducer

page 377



Round ducts connectors with condensation traps

page 377



Round to flat connector

page 378



Round flexible duct connector

page 378



Round flexible duct connector

page 379



Round flexible duct connector

page 379



Round flexible duct connector

page 380



Holder for round ducts

page 380

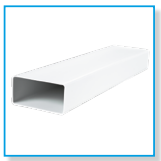

Flat duct

page 381

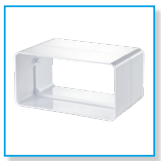

Flat duct connector

page 382



Flat duct connector with damper

page 382



Flexible flat duct connector

page 383



Air duct connector with a plate

page 383



Air duct connector with a plate and a back valve

page 384



page 384

Vertical 90˚ bend for flat ducts



page 385

Horizontal 90˚ bend for flat ducts



page 385

Versatile flat angular connector

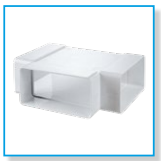

page 386

T-joint for flat ducts



page 386

Flat duct holder

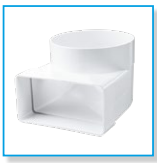

page 387

90˚ connecting bend for flat and round ducts



page 387

90˚ connecting bend for flat and flexible round ducts

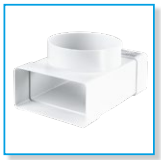

page 387

T-joint for flat and round ducts

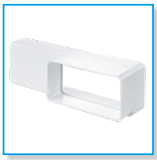

page 388

Reducer for flat ducts

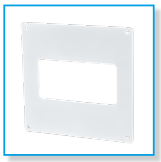

page 388

Wall plate for flat ducts



page 389

End grille



page 389

End grille with air pass regulation



page 390

Reducer for flat and round ducts



page 392

Wall plate with flange



page 392

Round to flat connector (symmetric)

Kitchen

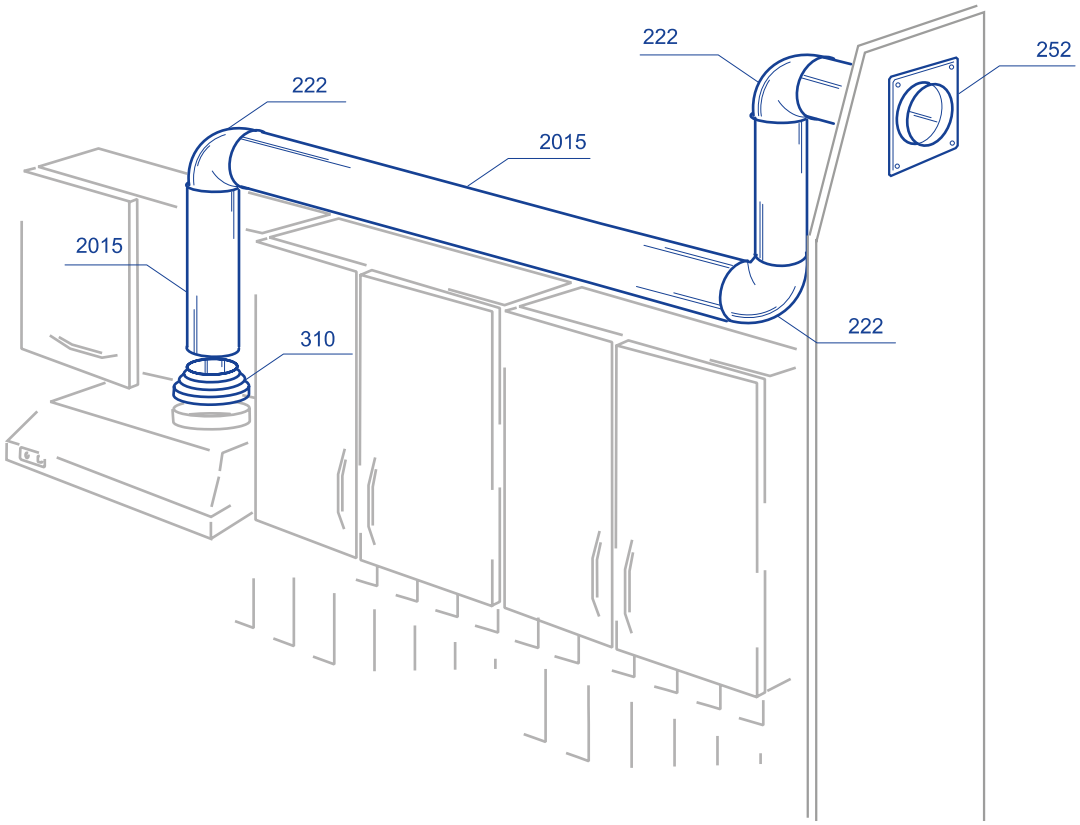

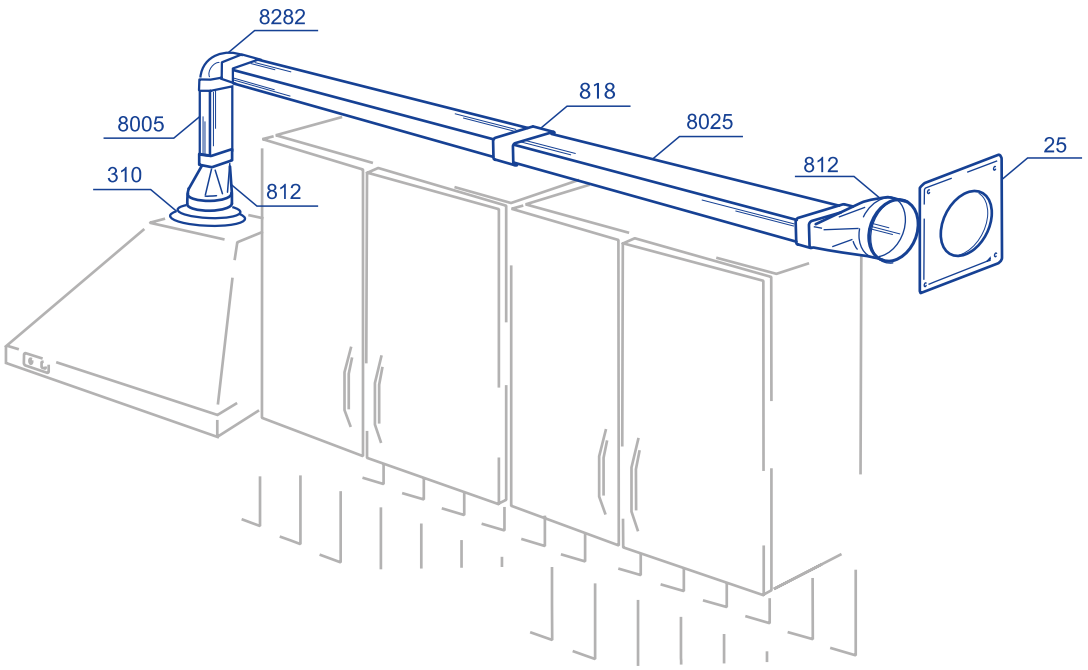

Bathroom

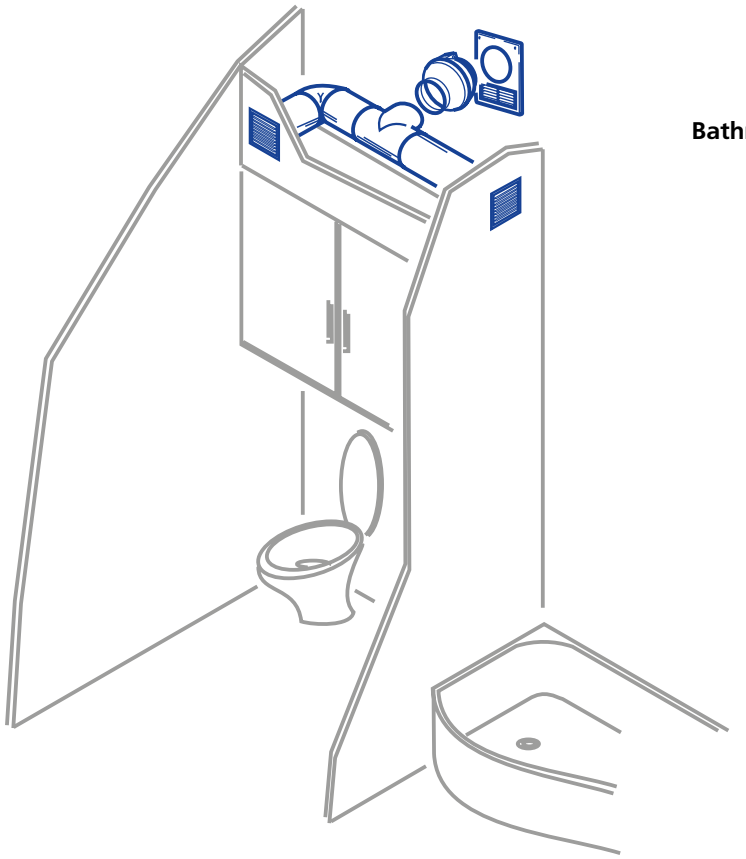

Apartment

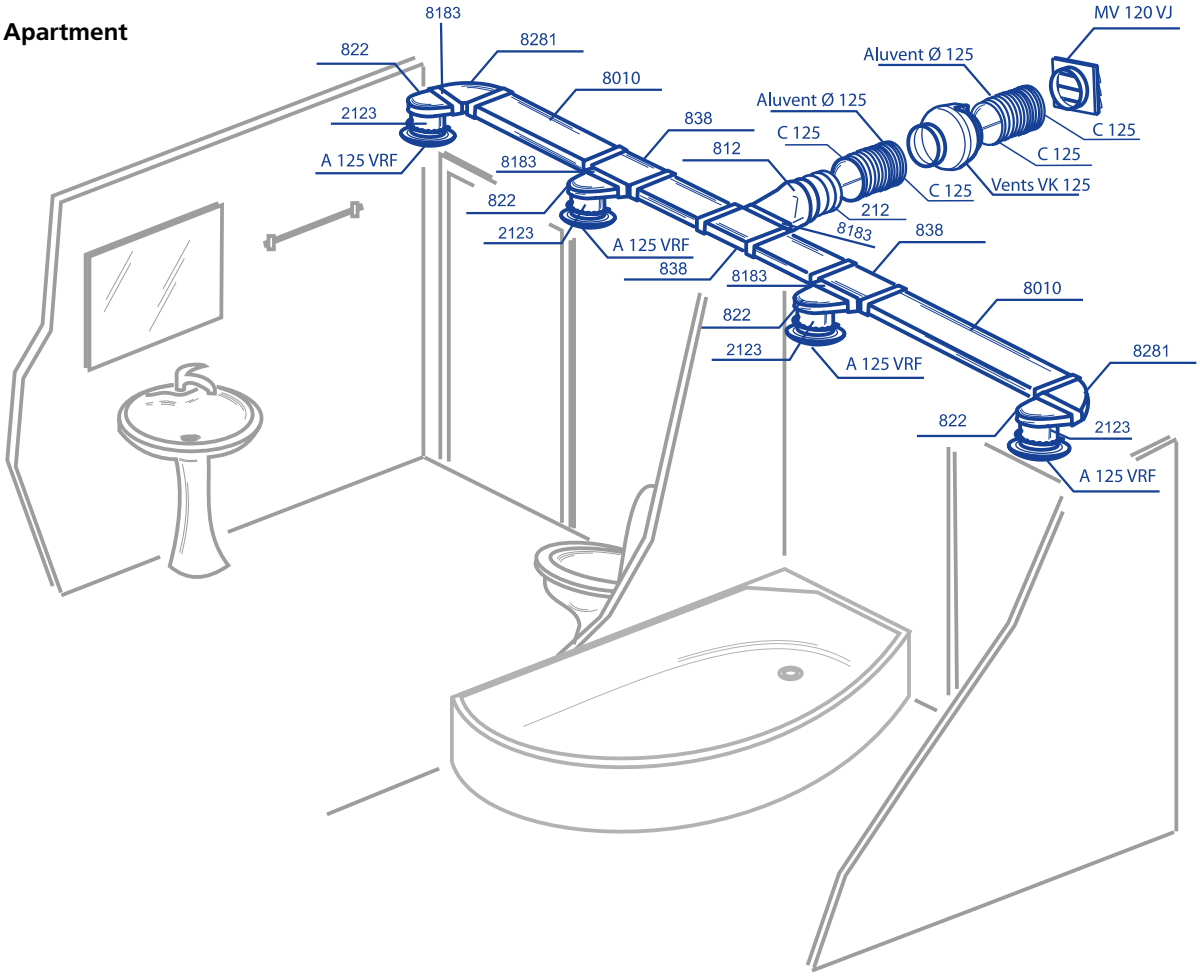

Cafe

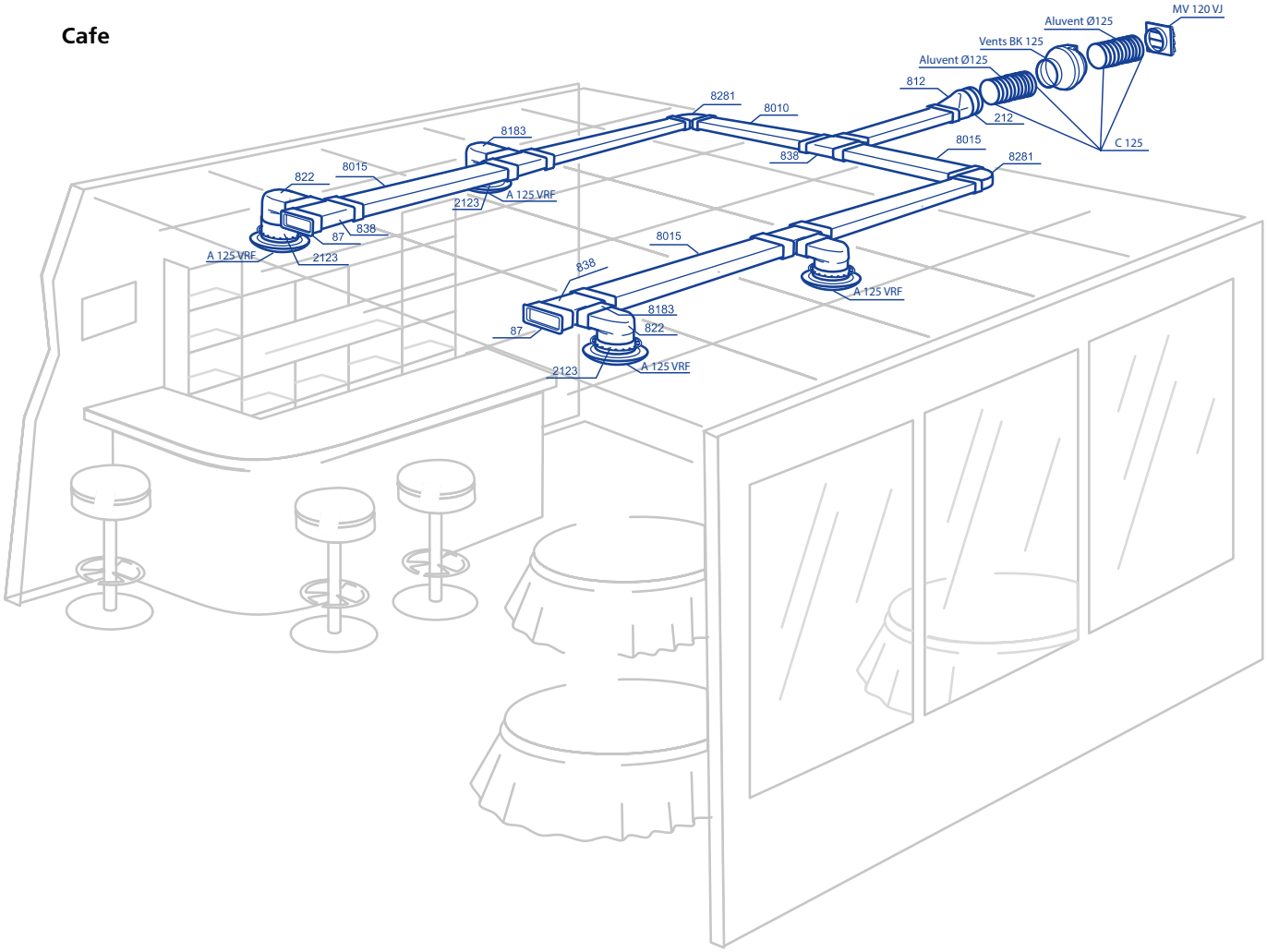

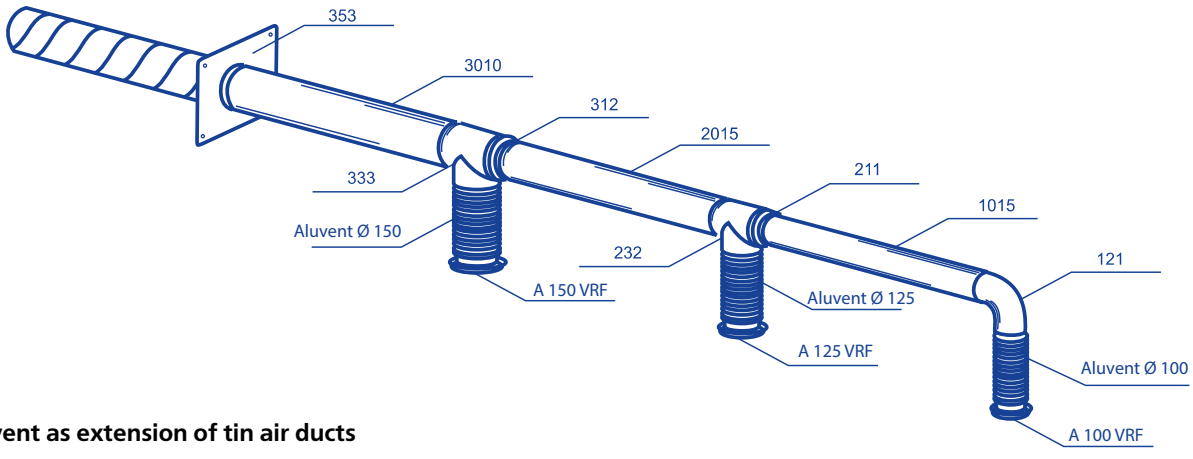

Plastivent as extension of tin air ducts

House

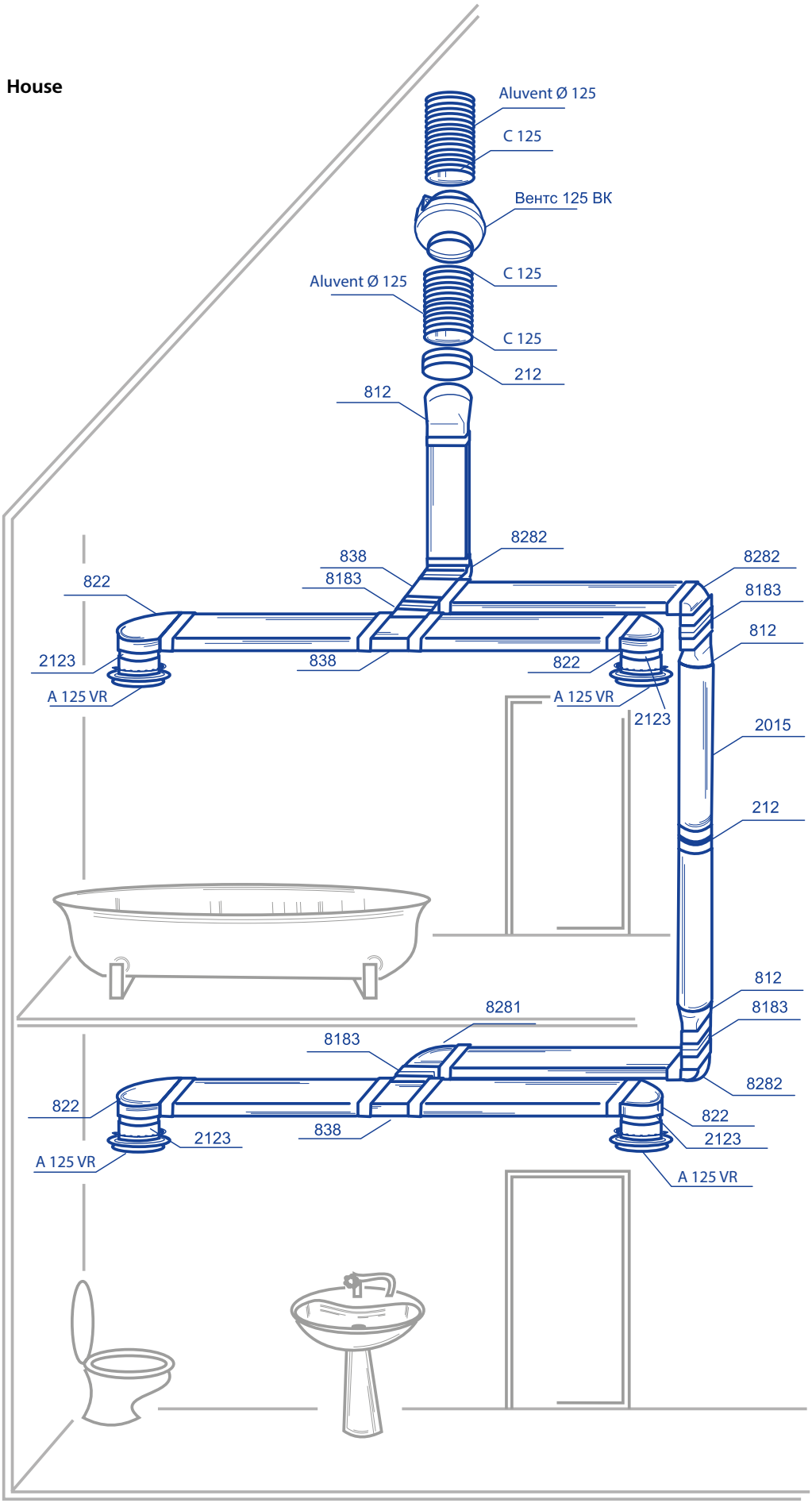
Aluvent Ø 125
C 125
Вентс 125 ВК
Aluvent Ø 125
C 125
C 125
212
812
8282
838
8183
822
2123
A 125 VR
838
822
A 125 VR
2123
8282
8183
812
2015
212
812
8183
8281
8183
8282
822
2123
838
822
2123
A 125 VR
A 125 VR

Office

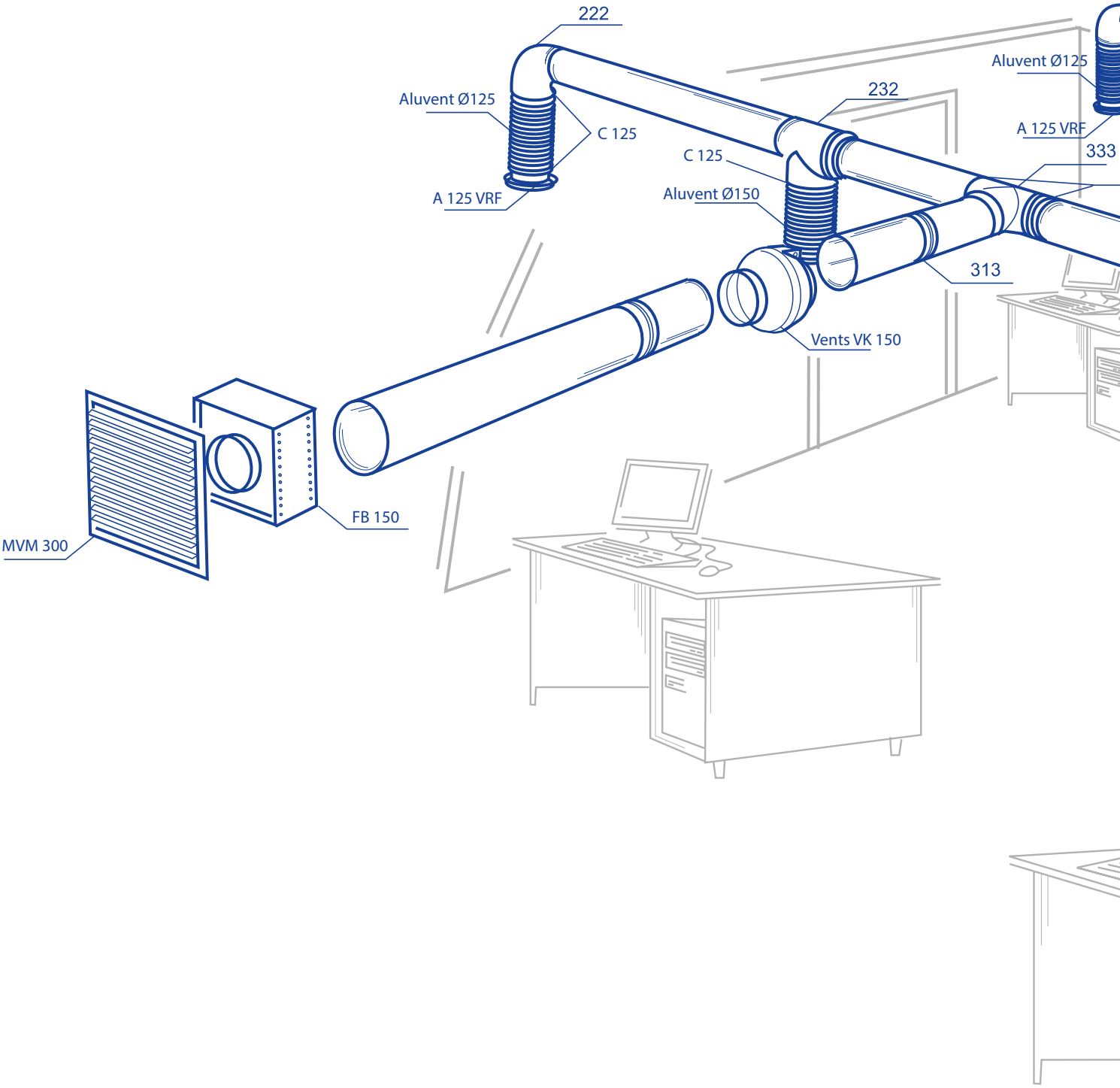
222
Aluvent Ø125
C 125
A 125 VRF
232
C 125
Aluvent Ø150
Aluvent Ø125
A 125 VRF
333
313
Vents VK 150
MVM 300
FB 150

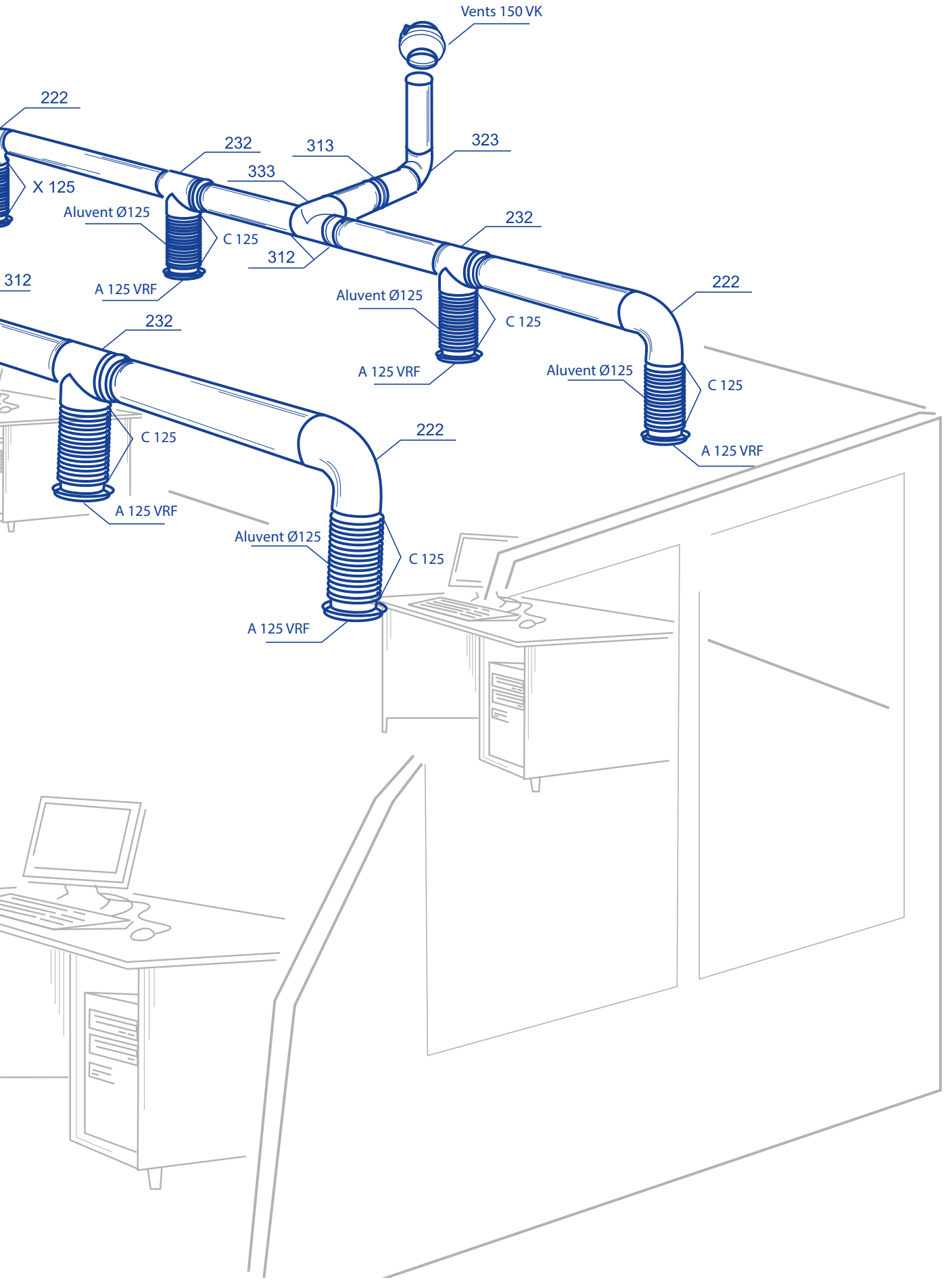
Vents 150 VK
222
232
313
323
333
X 125
Aluvent Ø125
C 125
312
A 125 VRF
232
312
Aluvent Ø125
C 125
A 125 VRF
222
232
Aluvent Ø125
C 125
A 125 VRF
222
C 125
A 125 VRF
Aluvent Ø125
C 125
A 125 VRF

Round duct

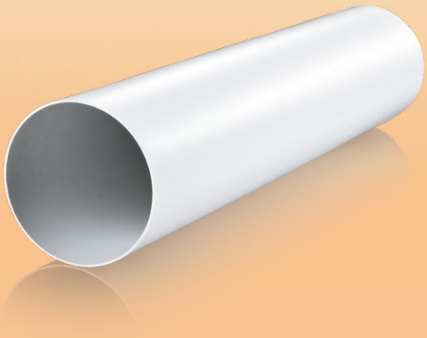

Application

- Supply and exhaust ventilation of various premises.
- Formation of round air ductworks.

Design

- Made of white PVC.
- Diameters: 100, 125, 150 and 200 mm.
- Duct length from 350 to 2500 mm.
- Connected with matching diameter connectors.

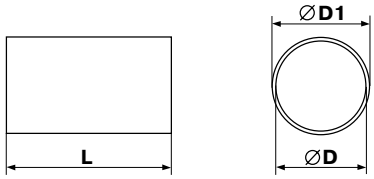

Code	Dimensions [mm]		
	D	D1	L
10035	100	103	350
20035	125	128	350
30035	150	153	350
40035	200	204	350
1005	100	103	500
2005	125	128	500
3005	150	153	500
4005	200	204	500
1010	100	103	1000
2010	125	128	1000
3010	150	153	1000
4010	200	204	1000
1015	100	103	1500
2015	125	128	1500
3015	150	153	1500
4015	200	204	1500
1020	100	103	2000
2020	125	128	2000

Code	Dimensions [mm]		
	D	D1	L
3020	150	153	2000
4020	200	204	2000
1025	100	103	2500
2025	125	128	2500
3025	150	153	2500
4025	200	204	2500
10035/2	104	107	350
20035/2	129	132	350
1005/2	104	107	500
2005/2	129	132	500
1010/2	104	107	1000
2010/2	129	132	1000
1015/2	104	107	1500
2015/2	129	132	1500
1020/2	104	107	2000
2020/2	129	132	2000
1025/2	104	107	2500
2025/2	129	132	2500

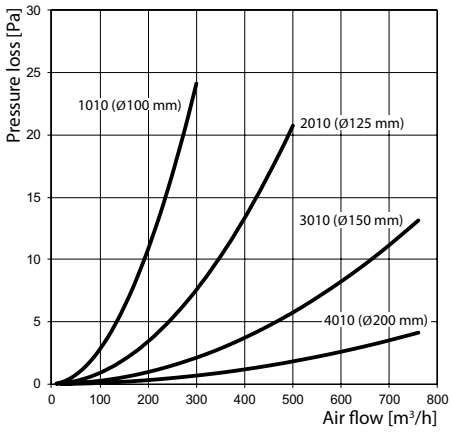

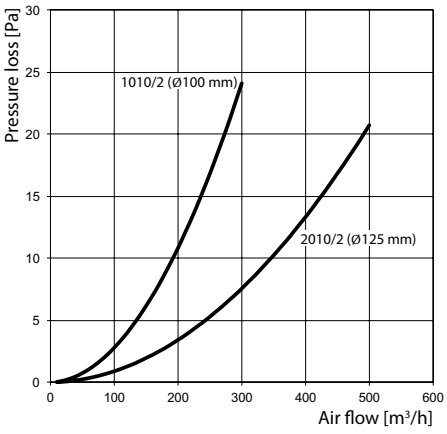

Data for 1 m air duct section

Round telescopic duct

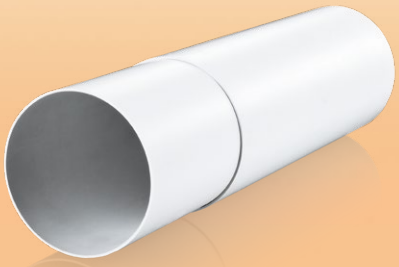

Application

- Supply and exhaust ventilation of various premises.
- Wall mounting.

Code	Dimensions [mm]				
	D	D1	D2	D3	L
1805	100	103	104	107	300-500
2805	125	128	129	132	300-500
3805	150	153	154	157	300-500
1810	100	103	104	107	500-1000
2810	125	128	129	132	500-1000
3810	150	153	154	157	500-1000

Design

- Made of white PVC.
- Telescopic design of two parts.
- Diameters: 100, 125, 150 mm.
- Air duct length is adjusted within 300 to 500 or 500 to 1000 mm.

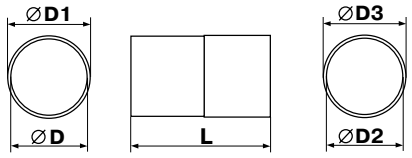

inner duct outer duct

90° bend for round ducts



Application

- Supply and exhaust ventilation of various premises.
- Connection of same diameter air ducts at 90°.

Code	Dimensions [mm]			
	D	D1	a	b
121	100	97	137	30
222	125	122	164	30
323	150	147	189	30

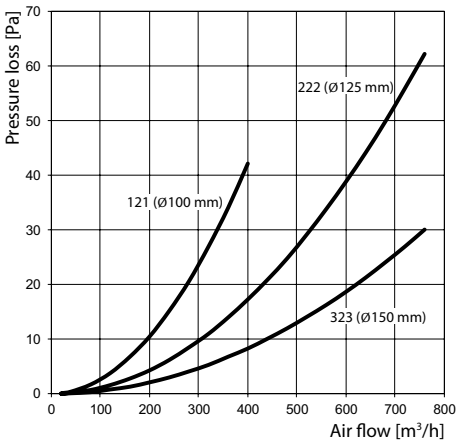

Design

- Made of white plastic.
- Connecting diameters: 100, 125, 150 mm.

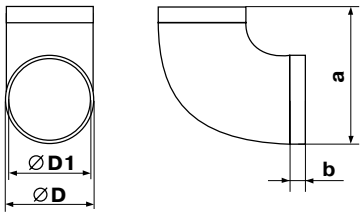

45° bend for round ducts



Application

- Supply and exhaust ventilation of various premises.
- Connection of same diameter air ducts at 45°.

Design

- Made of white plastic.
- Connecting diameters: 100, 125, 150 mm.

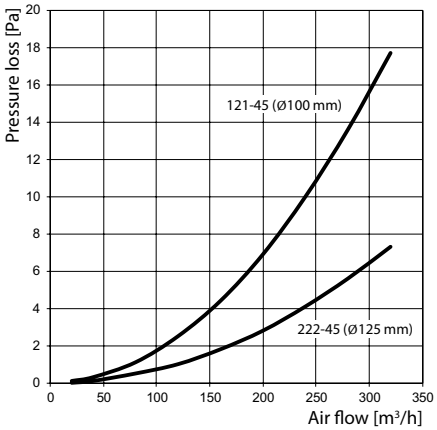

Code	Dimensions [mm]				
	D	D1	a	b	c
121-45	103	100	125	30	129
222-45	128	125	157	40	162
323-45	153	150	164	30	164

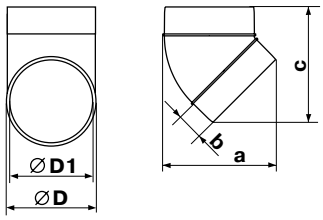

T-joint for round ducts



Application

- Formation of branch connections in supply or exhaust ventilation systems located in residential, public and other buildings.
- Connection of same diameter round ducts and integration into complex ventilation systems.

Design

- Made of white plastic.
- Connection of same diameter three round ducts at 90°.
- Connecting diameters: 100, 125, 150 mm.

Code	Dimensions [mm]				
	D	D1	a	b	c
131	100	97	173	30	139
232	125	122	198	30	164
333	150	147	223	30	189

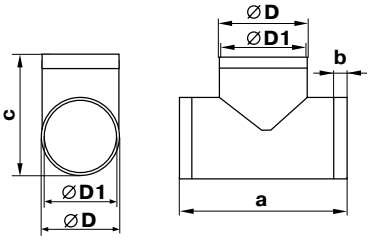

Wall plate for round ducts

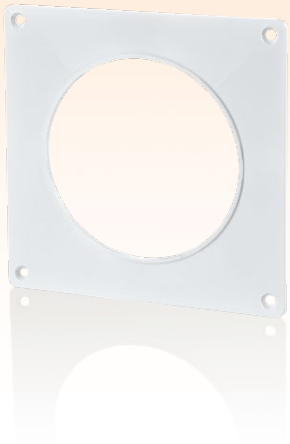

Application

- Supply and exhaust ventilation of various premises.
- Connection of air ducts to ventilation shafts.
- Decoration of mounting openings.

Design

- Made of white plastic.
- Screw fixing to wall.
- Connecting diameters: 100, 125, 150, 200 mm.

Code	Dimensions [mm]			
	D	h	a	b
15	103	3	150	134
25	128	3	170	154
35	151	3	204	188
45	204	3	250	230

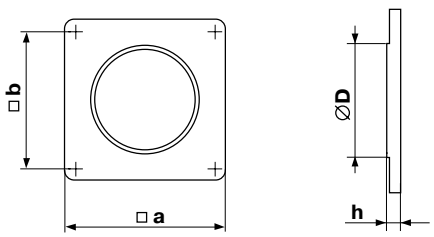

Round duct connector



Application

- Supply and exhaust ventilation of various premises.
- Connection of same diameter air ducts.

Design

- Made of white plastic.
- Designed for direct installation into air duct and equipped with a lock ring.
- Connecting diameters: 100, 125, 150, 200 mm.

Code	Dimensions [mm]		
	D	D1	a
111	100	96	62
212	125	123	62
313	150	148	62
414	200	197	62

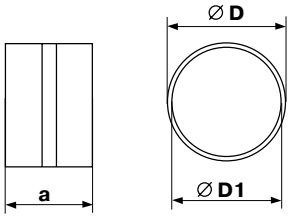

Connector with backdraft damper for round ducts



Application

- Supply and exhaust ventilation of various premises.
- Connection of same diameter air ducts.

Design

- Made of white plastic.
- Equipped with a backdraft damper for back flow prevention.
- Designed for direct installation into air duct and equipped with a lock ring.
- Connecting diameters: 100, 125, 150, 200 mm.

Code	Dimensions [mm]		
	D	D1	a
1111	100	96	62
2121	125	123	62
3131	150	148	62
4141	200	197	62

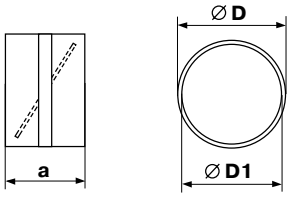

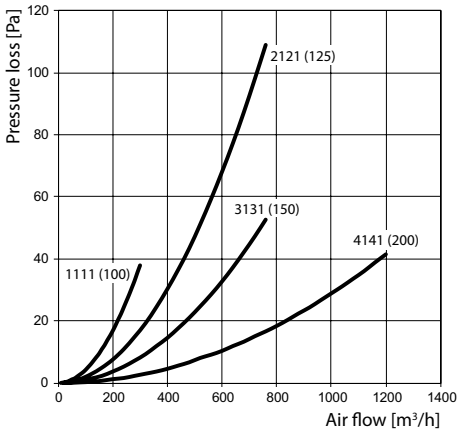

Connector with backdraft damper and wall plate for round ducts



Application

- Supply and exhaust ventilation of various premises.
- Connection of same diameter air ducts.
- Decoration of mounting openings.

Design

- Made of white plastic.
- Equipped with a wall plate for decoration of mounting openings.
- Equipped with a backdraft damper for back flow prevention.
- Screw fixing to wall.
- Connecting diameters: 100, 125, 150, 200 mm.

Code	Dimensions [mm]			
	a	b	c	D
1511	150	134	62	100
2521	170	154	62	125
3531	204	188	62	150
4541	250	230	62	200

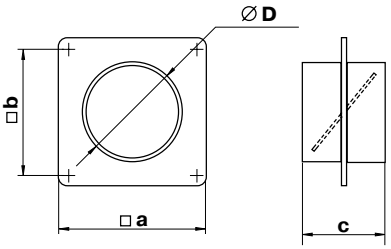

Connector with plate for round ducts



Application

- Supply and exhaust ventilation of various premises.
- Connection of same diameter air ducts.
- Decoration of mounting openings.

Design

- Made of white plastic.
- Equipped with a wall plate for decoration of mounting openings.
- Screw fixing to wall.
- Connecting diameters: 100, 125, 150, 200 mm.

Code	Dimensions [mm]			
	a	b	c	D
151	150	134	62	100
252	170	154	62	125
353	204	188	62	150
454	250	230	62	200

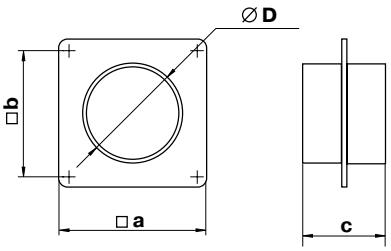

Reducer



Application

- Supply and exhaust ventilation of various premises.
- Connection of various diameter air ducts.

Design

- Made of white plastic.
- Connecting diameters: 80-100, 100-120, 100-125, 100-150, 125-150, 150-200 mm.

Code	Dimensions [mm]				
	a	D1	D2	D3	D4
110	60	103	100	76	80
110-11	42	113	110	96	100
211	60	129	125	96	100
311	70	149.5	146	96	99.5
312	60	154	150	121	125
413	71	204	200	146	150
611	60	124	120	98.5	99

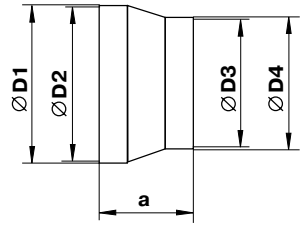

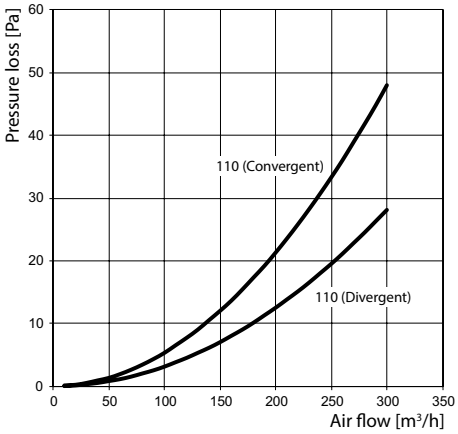

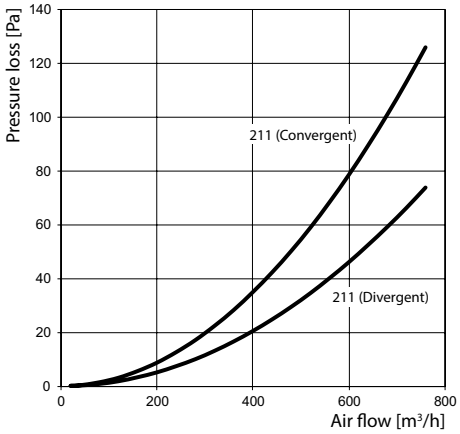

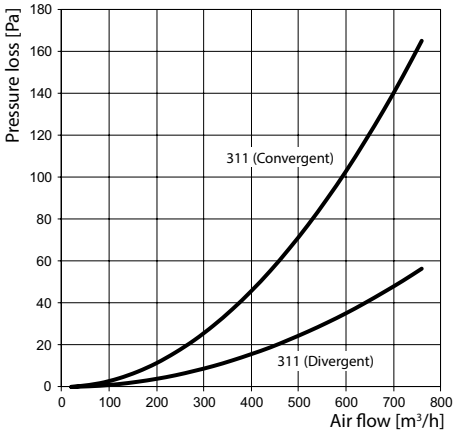

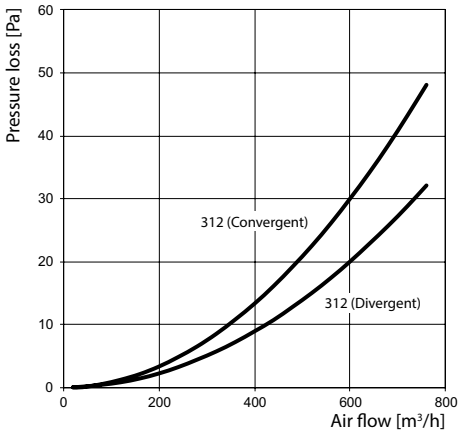

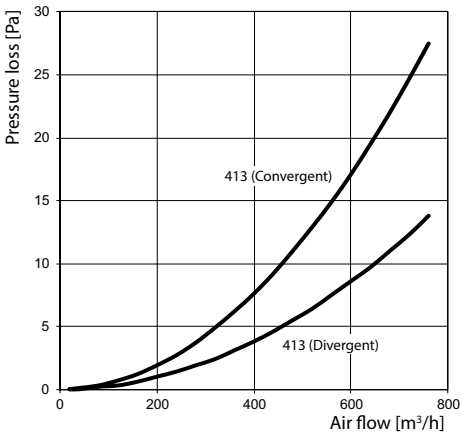

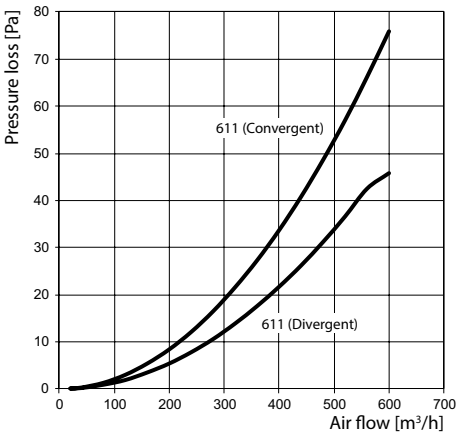

Reducer



Application

- Supply and exhaust ventilation of various premises.
- Connection of Ø 120 and 125 mm round air ducts.

Design

- Made of white plastic.
- Connecting diameters: 125-129 mm.

Code	Dimensions [mm]				
	a	D1	D2	D3	D4
216	42	129	125	115	119

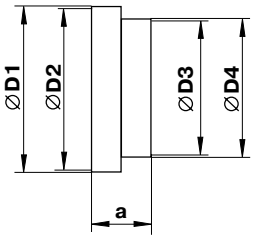

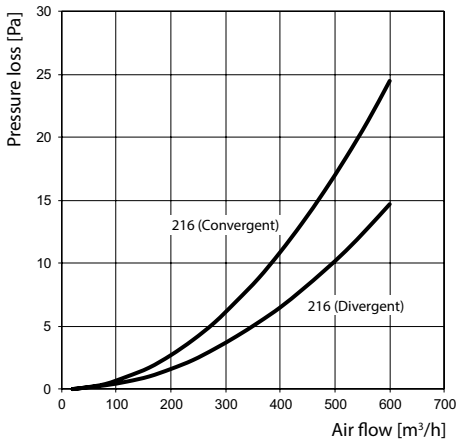

Round step reducer



Application

- Supply and exhaust ventilation of various premises.
- Connection of various diameter air ducts.

Design

- Made of white plastic.
- Connecting diameters: 80-100-120-125-150 mm.
- Cut out spare length piece to get the required size.

Code	Dimensions [mm]	
	a	Ø
310	125	80-100-120-125-150

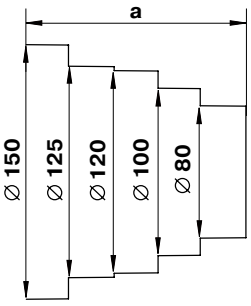

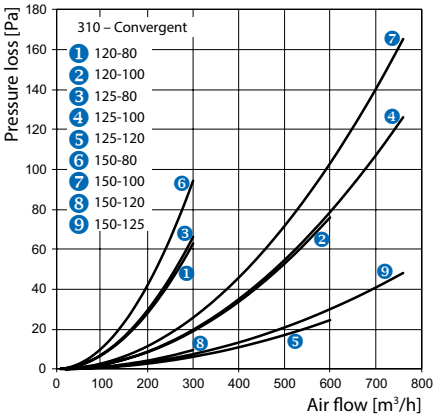

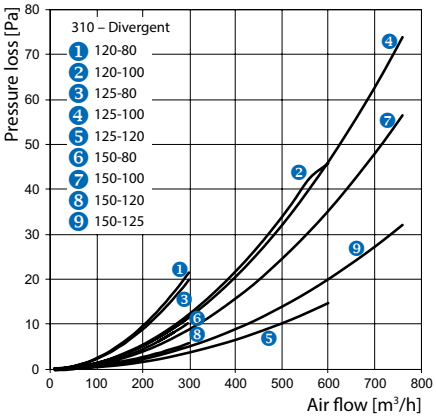

Eccentric reducer



Application

- Supply and exhaust ventilation of various premises.
- Connection of round ducts.

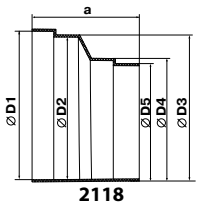

2118

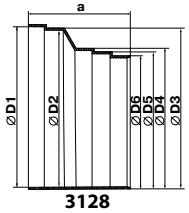

3128

Design

- Made of white plastic.
- Connecting diameters: 100, 120, 125, 130, 150 mm.

Code	Dimensions [mm]						
	a	D1	D2	D3	D4	D5	D6
2118	90	125	120	123	103	99	-
3128	96	151	148	152	132	129	125

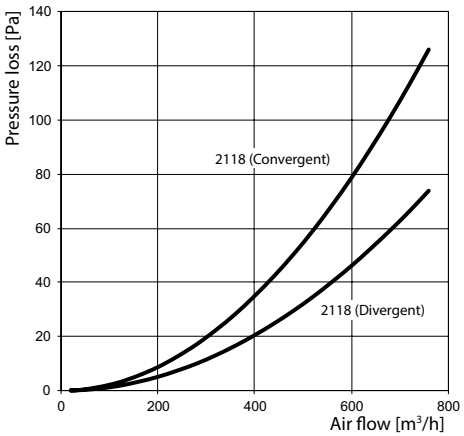

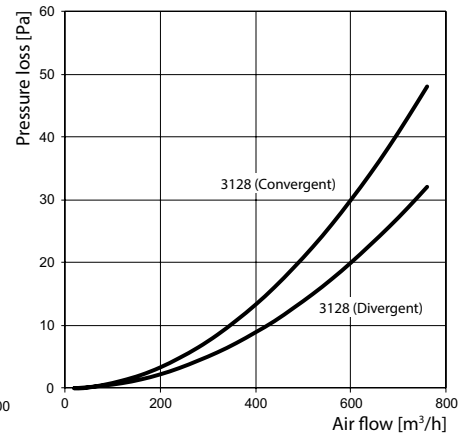

Round ducts connectors with condensation traps



Application

- Supply and exhaust ventilation of various premises.
- Connection of various diameter air ducts.
- Prevents small amounts of condensate from dripping down the air duct.

Design

- Made of white plastic.
- Connecting diameters: 100, 125, 150 mm.

Code	Dimensions [mm]		
	h	D	D1
1119	136	100	129
2129	136	125	154
3139	153	150	209

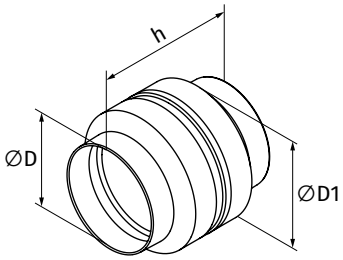

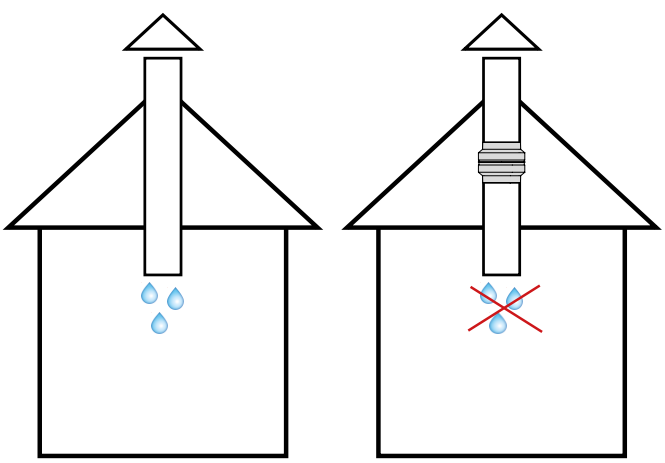

Round to flat connector



Application

- Supply and exhaust ventilation of various premises.
- Connection of round and flat ducts.

Design

- Made of white plastic.
- Direct connection to round and flat ducts.
- Connecting ducts: 100-55x110, 100-60x122, 125-55x220, 125-60x204, 150-90x220 mm.

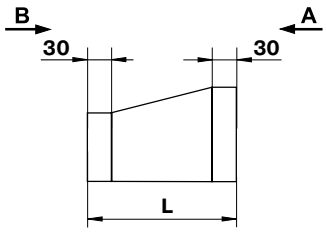

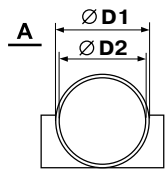

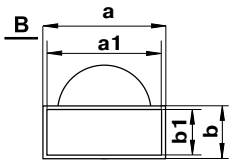

Code	Dimensions [mm]						
	a	a1	b	b1	D1	D2	L
511	113	110	59	55	103	100	137
612	226	220	60	55	124	121	165
711	124	122	64	60	103	100	137
812	208	204	64	60	128	125	140
913	224	220	94	90	150	146	165

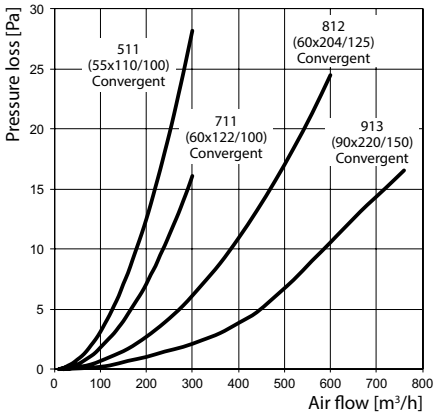

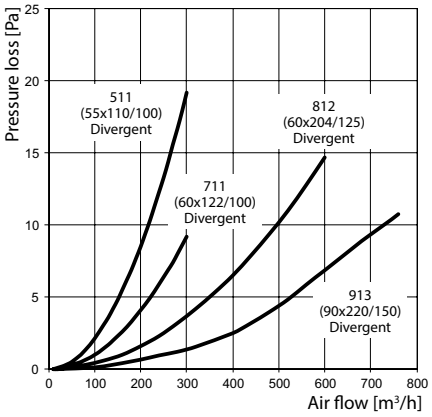

Round flexible duct connector



Application

- Supply and exhaust ventilation of various premises.
- Connection of flexible ducts with plastic system components.

Design

- Made of white plastic.
- Connection to flexible air ducts without clamps.
- Flexible spiral seam duct is connected to one side and the other side is connected to Ø 100 mm flange.
- Left thread. Not compatible with Polyvents air ducts.

Code	Dimensions [mm]				
	A	B	C	D	E
1214	90	30	60	100	110

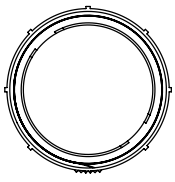

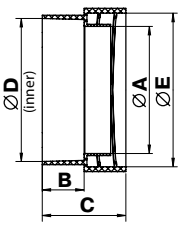

Round flexible duct connector



Application

- Supply and exhaust ventilation of various premises.
- Connection of flexible ducts with plastic system components.

Design

- Made of white plastic.
- Connection to flexible air ducts without clamps.
- Flexible spiral seam duct is connected to one side and the other side is connected to Ø 100 mm air duct.
- Left or right (R) thread. Right thread connectors are used with Polyvents air ducts.

Code	Dimensions [mm]				
	A	B	C	D	E
1215	90	30	60	100	110
1215R	90	30	60	100	110

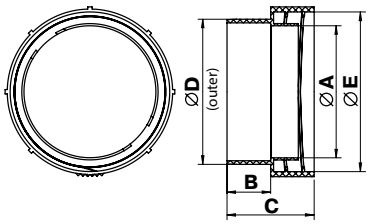

Round flexible duct connector



Application

- Supply and exhaust ventilation of various premises.
- Connection of flexible round ducts.

Design

- Made of white PVC.
- Cover the connector with air duct and fix it with clamps.
- Connecting diameters: 100, 125, 150, 200 mm.

Code	Dimensions [mm]		
	a	D	D1
1113	60	100	103
2123	60	125	128
3133	60	150	153
4143	60	200	204

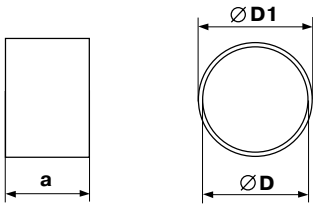

Flexible round duct connector

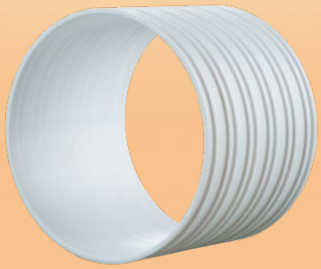

Application

- Supply and exhaust ventilation of various premises.
- Connection of flexible round ducts.

Design

- Made of white PVC.
- Cover the connector with air duct and fix it by clamps.
- Connecting diameters: 100, 125 mm.

Code	Dimensions [mm]	
	D	a
1113N	100	110
2123N	125	110

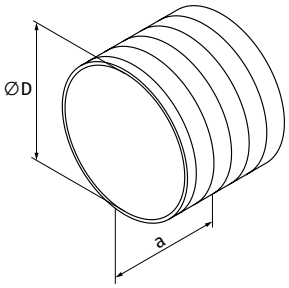

Holder for round ducts



Application

- Supply and exhaust ventilation of various premises.
- Mounting of round ducts to wall, ceiling or any other plane surface.

Design

- Made of white plastic.
- Fixation to plane surface with screws.
- Special snaps provide reliable fixation of the duct with the holder.
- Connecting diameters: 100, 125, 150, 200 mm.

Code	Dimensions [mm]		
	a	b	D
16	113	20	103
26	138	20	128
36	163	20	153
46	213	20	203

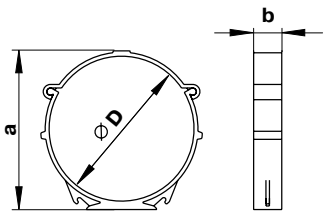

Flat air duct

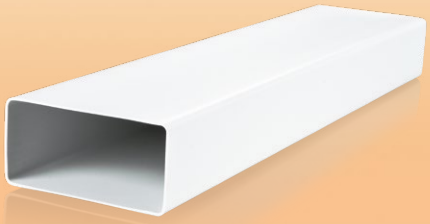

Application

- Supply and exhaust ventilation of various premises.
- Formation of flat air ductworks.

Design

- Made of white PVC.
- Size: 55x110, 55x220, 60x122, 60x204, 90x220 mm.
- Duct length from 350 to 2500 mm.
- Connected with matching connectors.

Code	Dimensions [mm]				
	a	b	a1	b1	L
50035	55	110	52	107	350
60035	55	220	52	217	350
70035	60	122	57	119	350
80035	60	204	57	200	350
90035	90	220	86	216	350
5005	55	110	52	107	500
6005	55	220	52	217	500
7005	60	122	57	119	500
8005	60	204	57	200	500
5010	55	110	52	107	1000
6010	55	220	52	217	1000
7010	60	122	57	119	1000
8010	60	204	57	200	1000
9010	90	220	86	216	1000
5015	55	110	52	107	1500
6015	55	220	52	217	1500
7015	60	122	57	119	1500
8015	60	204	57	200	1500
9015	90	220	86	216	1500
5020	55	110	52	107	2000
6020	55	220	52	217	2000
7020	60	122	57	119	2000
8020	60	204	57	200	2000
9020	90	220	86	216	2000
5025	55	110	52	107	2500
6025	55	220	52	217	2500
7025	60	122	57	119	2500
8025	60	204	57	200	2500
9025	90	220	86	216	2500

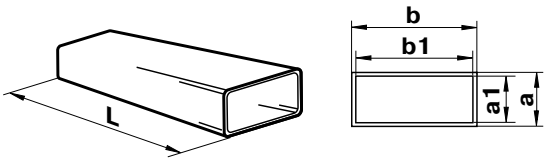

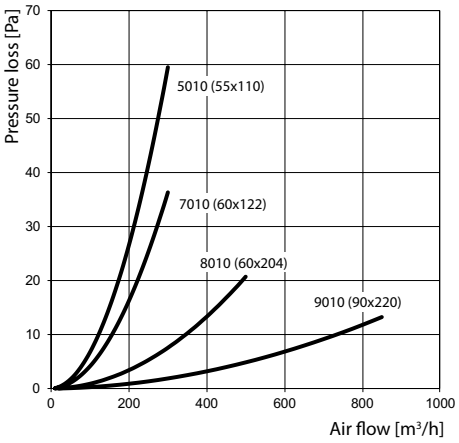

Data for 1 m air duct section

Flat duct connector



Application

- Supply and exhaust ventilation of various premises.
- Connection of same sized flat ducts.

Design

- Made of white plastic.
- Designed for installation into air duct and equipped with a lock ring for easy jointing.
- Connecting sizes: 55x110, 55x220, 60x122, 60x204, 90x220 mm.

Code	Dimensions [mm]				
	a	b	a1	b1	c
515	56	110	59	114	66
616	55	220	60	225	62
717	60	122	65	126	69
818	60	204	65	209	62
919	90	220	95	225	62

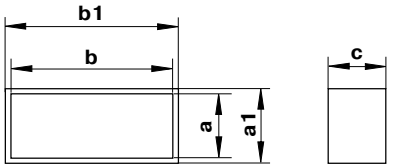

Flat duct connector with damper



Application

- Supply and exhaust ventilation of various premises.
- Connection of same sized flat ducts.

Design

- Made of white plastic.
- Designed for installation into air duct and equipped with a lock ring for easy jointing.
- Equipped with a backdraft damper for back flow prevention.
- Connecting sizes: 55x110, 60x122, 60x204, 90x220 mm.

Code	Dimensions [mm]				
	a	b	a1	b1	c
5151	56	110	59	114	66
7171	60	122	65	126	69
8181	60	204	65	209	62
9191	90	220	95	225	62

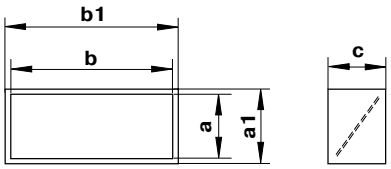

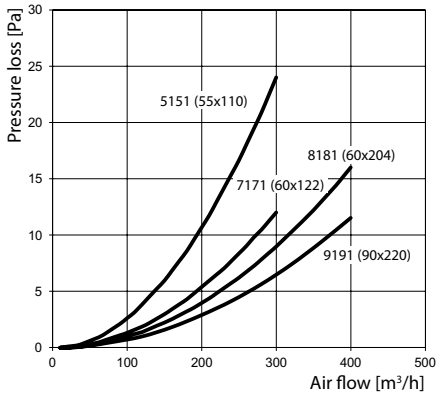

Flexible flat duct connector



Application

- Supply and exhaust ventilation of various premises.
- Connection of same sized flat flexible ducts.

Design

- Made of white PVC.
- Cover the connector with air duct and fix it with clamps.
- Connecting sizes: 55x100, 60x122, 60x204 mm.

Code	Dimensions [mm]				
	a	b	a1	b1	c
5153	55	110	52	107	60
7173	60	122	57	119	60
8183	60	204	57	200	60

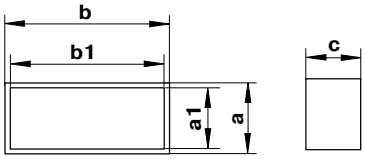

Air duct connector with a plate

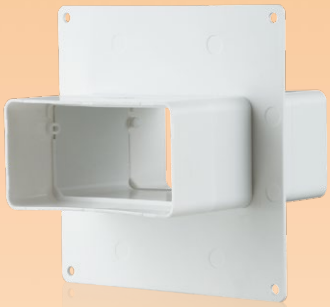

Application

- Supply or exhaust ventilation of various premises.
- Connection of single size flat air ducts.
- Decoration of mounting opening and connections to wall.

Design

- Made of white plastic.
- Air ducts are fitted inside the connector.
- Equipped with lock rings for easy adjustment.
- Screw fixing to wall.
- Connecting sizes: 55x110, 60x120, 60x204 mm.

Code	Dimensions [mm]							
	a	b	c	A	B	C	D	L
555	110	55	2	141	154	154	141	131
757	120	60	2	141	154	154	141	131
858	204	60	3	229	154	242	141	186

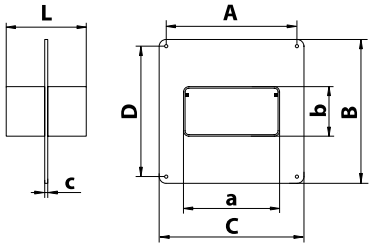

Air duct connector with a plate and a back valve



Application

- Supply or exhaust ventilation of various premises.
- Connection of single size flat air ducts.
- Decoration of mounting opening and connections to wall.

Design

- Made of white plastic.
- Air ducts are fitted inside the connector.
- Equipped with lock rings for easy adjustment.
- Equipped with a back valve to prevent back drafting.
- Screw fixing to wall.
- Connecting sizes: 55x110, 60x122, 60x204 mm.

Code	Dimensions [mm]							
	a	b	c	A	B	C	D	L
5551	110	55	2	141	154	154	141	131
7571	120	60	2	141	154	154	141	131
8581	204	60	3	229	154	242	141	186

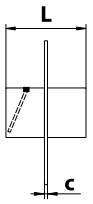

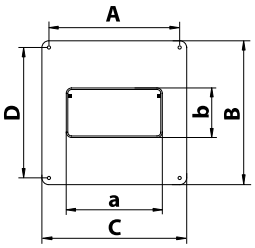

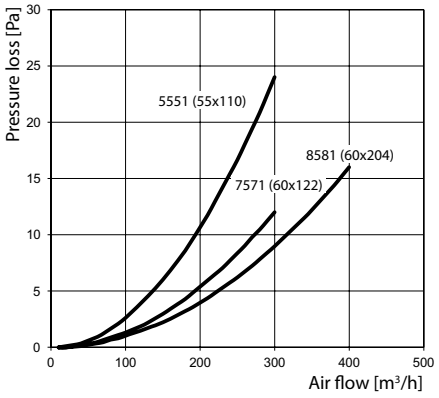

Vertical 90° bend for flat ducts



Application

- Supply and exhaust ventilation of various premises.
- Connection of same sized flat ducts at 90° vertically.

Design

- Made of white plastic.
- Connecting sizes: 55x110, 55x220, 60x122, 60x204, 90x220 mm.

Code	Dimensions [mm]		
	a	b	c
5252	55x110	89	32
6262	55x220	95	38
7272	60x122	93	32
8282	60x204	103	32
9292	90x220	130	35

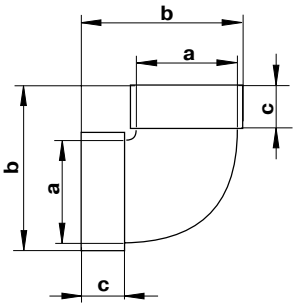

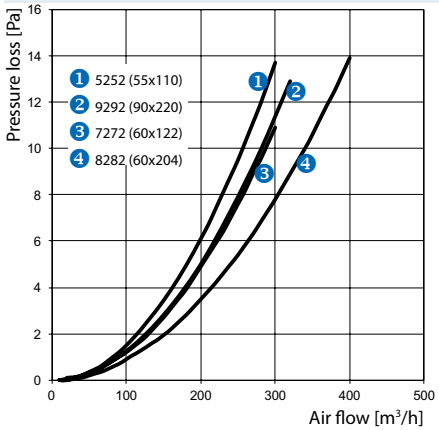

Round and flat air duct connector with a wall plate



Application

- For supply or exhaust ventilation of various rooms.
- Decoration of mounting holes.

Design

- Made of white plastic.
- Equipped with a wall plate for decorating the mounting holes.
- Installed on the wall using screws.
- Connectable air ducts: 100-55x110.

Code	Dimensions [mm]				
	□A	C	a	b	Ød
551	122	52	110	55	100

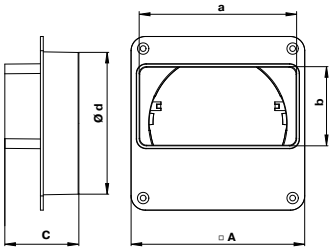

Round and flat channel connector with a wall plate and a back valve



Application

- For supply or exhaust ventilation of various rooms.
- Decoration of mounting holes.

Design

- Made of white plastic.
- Equipped with a wall plate for decorating the mounting holes.
- Installed on the wall using screws.
- Connectable air ducts: 100-55x110.
- Equipped with gravity valve to prevent back draft.

Code	Dimensions [mm]				
	□A	C	a	b	Ød
5511	122	52	110	55	100

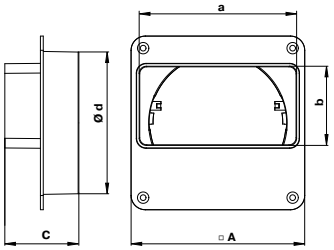



Horizontal 90° bend for flat ducts

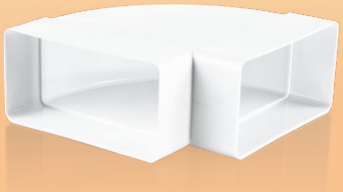

Application

- Supply and exhaust ventilation of various premises.
- Connection of same sized flat ducts at 90° horizontally.

Design

- Made of white plastic.
- Connecting sizes: 55x110, 55x220, 60x122, 60x204, 90x220 mm.

Code	Dimensions [mm]		
	a	b	c
5251	55x110	143	32
6261	57x222	262	36
7271	60x122	155	32
8281	60x204	238	32
9291	90x220	262	35

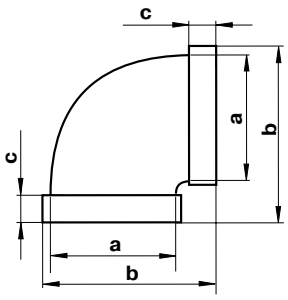

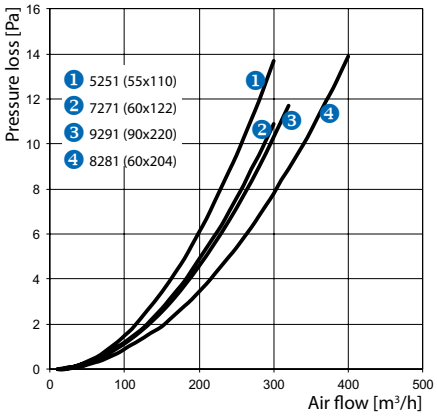

Versatile flat angular connector



Application

- Supply and exhaust ventilation of various premises.
- Angular connection of flat ducts.

Design

- Made of white plastic.
- Turning point angle from 3° to 48°.
- Depending on selected turning angle one connector side is cut out. Connection to the flat duct through matching sized connector.
- On flange side direct connection to flat duct of respective size.
- Connecting section: 55x100 and 60x204 mm.

Code	Dimensions [mm]		
	a	b	c
52510	190	143	55x110
82810	286	247	60x204

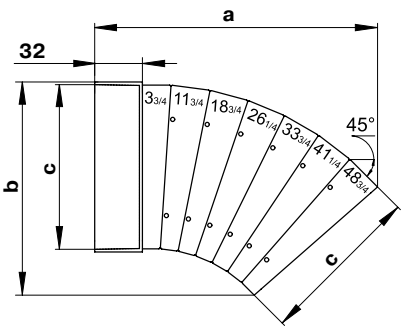

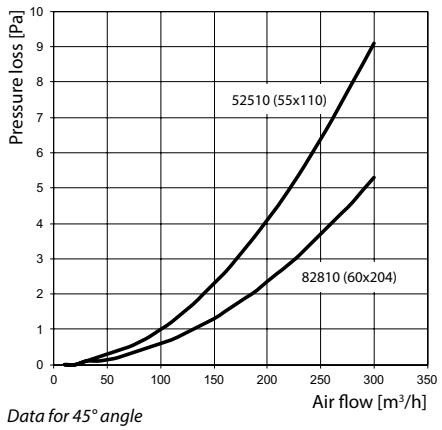

Data for 45° angle

T-joint for flat ducts



Application

- Formation of branch connections in supply or exhaust ventilation systems located in residential, public and other buildings.
- Connection of same sized flat ducts and integration into complex ventilation systems.

Design

- Made of white plastic.
- Connection of same sized three flat ducts at 90°.
- Connecting sizes: 55x110, 60x122, 60x204, 90x220 mm.
- Direct connection to matching sized ducts.

Code	Dimensions [mm]		
	a	b	c
535	144	174	55x110
737	155	185	60x122
838	248	288	60x204
939	261	296	90x220

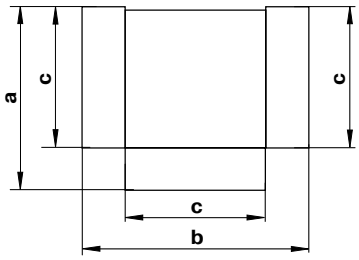

Flat duct holder

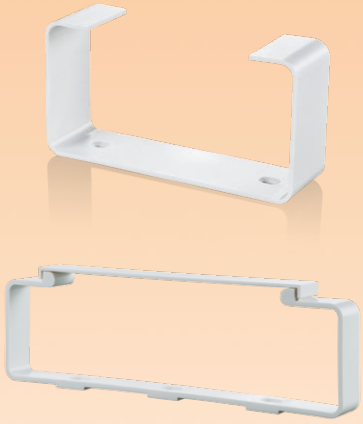

Application

- Supply and exhaust ventilation of various premises.
- Mounting of flat ducts to wall, ceiling or any other plane surface.

Design

- Made of white plastic.
- Fixation to plane surface with screws.
- Specially designed configuration provides reliable duct to holder fixation and quick dismantling.
- Connecting sizes: 55x110, 55x220, 60x122, 60x204, 90x220 mm.

Code	Dimensions [mm]		
	a	b	c
56	114	59	74
66	227	67	144
76	126	64	86
86	209	65	169
96	227	95	175

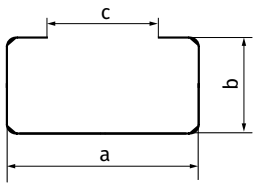

90° connecting bend for flat and round ducts

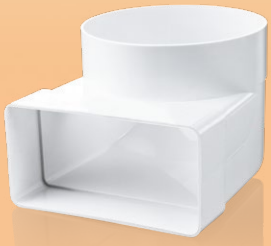

Application

- Supply and exhaust ventilation of various premises.
- Connection of flat and round ducts at 90°.

Design

- Made of white plastic.
- Connecting dimensions: 55x110-100, 55x220-100, 55x220-125, 60x122-100, 60x204-100, 60x204-125, 60x204-150, 90x220-125, 90x220-150 mm.
- Flat ducts have direct connection and round ducts are connected through a matching connector.

Code	Dimensions [mm]					
	a	D	D1	b	h	L
521	55x110	100	103	58x113	87	138
621	55x220	96	99	55x60	88	175
622	55x220	121	124	55x60	88	175
721	60x122	100	103	63x125	87	140
821	60x204	97	100	64x208	92	220
822	60x204	122	125	64x208	92	220
823	60x204	147	150	64x208	92	220
922	90x220	122	125	94x226	120	230
923	90x220	147	150	94x226	120	230

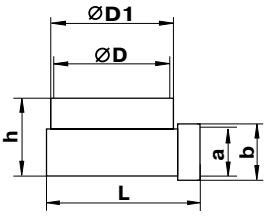

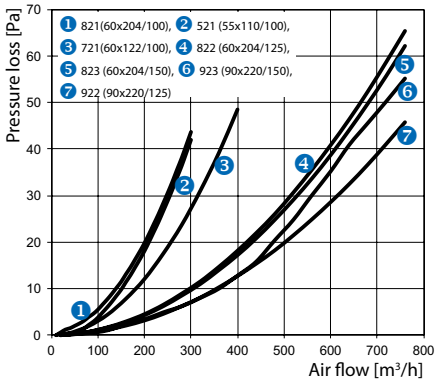

90° connecting bend for flat and flexible round ducts



Application

- Supply and exhaust ventilation of various premises.
- Connection of rigid flat to round flexible ducts at 90°.

Design

- Made of white plastic.
- Connecting dimensions: 220x55-100, 220x55-125 mm.

Code	Dimensions [mm]						
	a	a1	D	b	b1	h	L
621-1	220	226	100	55	60	134	175
621-2	220	226	125	55	60	134	175

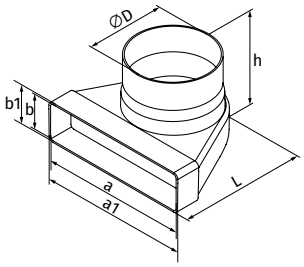

T-joint for flat and round ducts

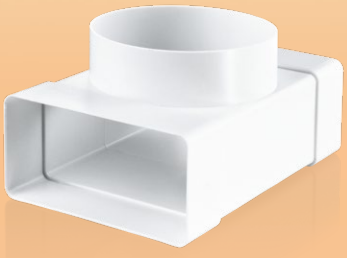

Application

- Formation of branch connections in supply or exhaust ventilation systems located in residential, public and other buildings.
- Connection of flat and round ducts.

Design

- Made of white plastic.
- Connecting dimensions: 55x110-100 mm.
- Direct connection to air duct.

Code	Dimensions [mm]						
	axb	D	D1	c	d	h	L
531	55x110	100	103	58	113	87	172

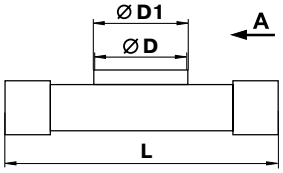

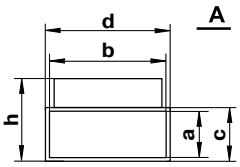

Reducer for flat ducts

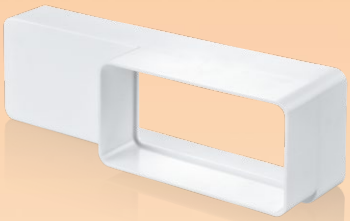

Application

- Supply and exhaust ventilation of various premises.
- Connection of flat different sized ducts.

Code	Dimensions [mm]		
	b	a	c
518	60x204	55x110	30

Design

- Made of white plastic.
- Connecting dimensions: 55x110-60x204 mm.

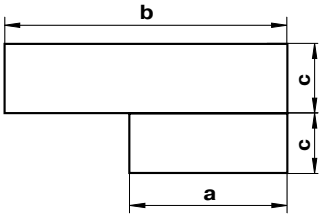

Wall plate for flat ducts

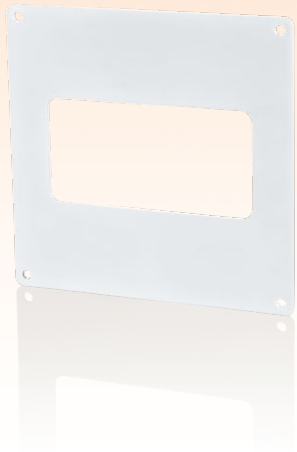

Application

- Supply and exhaust ventilation of various premises.
- Connection of air ducts to ventilation shafts.
- Decoration of mounting openings.

Design

- Made of white plastic.
- Screw fixing to wall.
- Connecting sizes: 55x110, 60x122, 60x204 mm.

Code	Dimensions [mm]						
	a	b	c	d	e	D	E
55	111	56	2	141	141	154	154
75	123	61	2	141	141	154	154
85	205	61	3	229	141	242	154

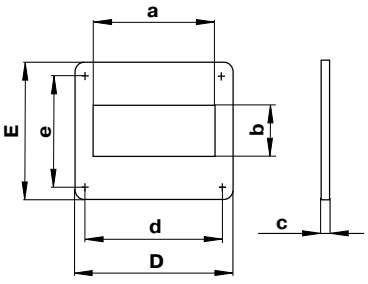

End grille



Application

- Decoration of supply or exhaust vents of public, residential and industrial ventilation systems.
- Correct air flow distribution in premises.
- Wall or ceiling mounting.

Design

- Made of white plastic.
- Detachable front part facilitates cleaning.
- Modification with an insect screen (s) is available.
- Connecting dimensions: 55x110 and 60x204 mm.

Code	Dimensions [mm]					
	a	b	c	d	e	f
571	88	137	114	59	73	9
671	93	232	224	59	76	9
871	93	232	208	64	76	9

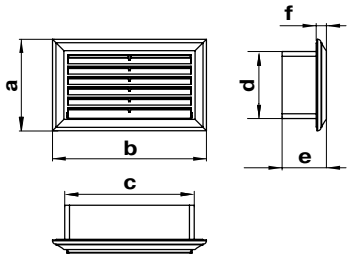

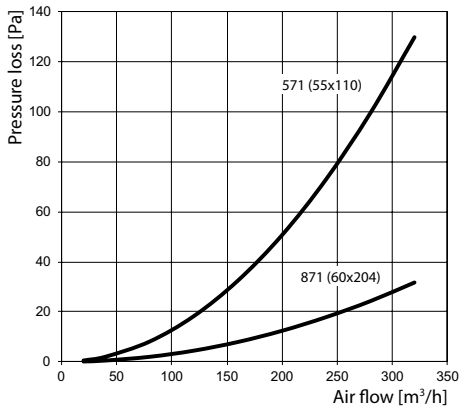

End grille with air pass regulation

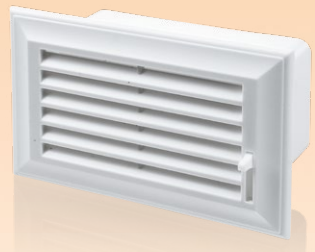

Application

- Decoration of supply or exhaust vents of public, residential and industrial ventilation systems.
- Correct air flow distribution in premises.
- Wall or ceiling mounting.

Design

- Made of white plastic.
- Equipped with a movable flap for air flow regulation.
- Air pass is regulated with a tilt wand.
- Detachable front part facilitates cleaning.
- Modification with an insect screen (s) is available.
- Matches with 55x110 and 60x204 mm air ducts.

Code	Dimensions [mm]					
	a	b	c	d	e	f
572	88	137	114	59	73	18
872	93	232	208	64	76	18

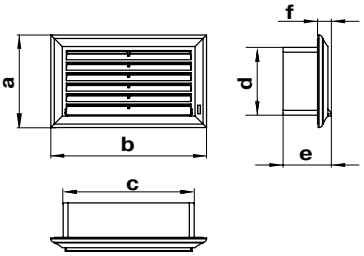

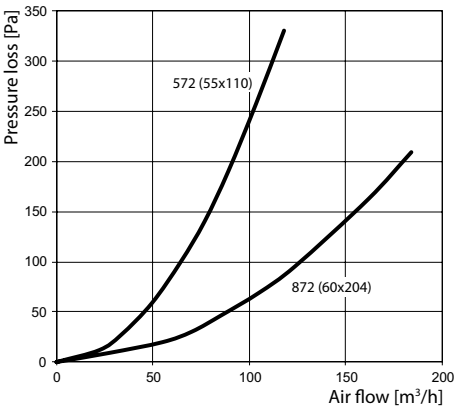

Reducer for flat and round ducts



Application

- Supply and exhaust ventilation of various premises.
- Flat to round duct connection.

Design

- Made of white plastic.
- Connecting dimensions: 55x110-100 mm.
- Direct connection of reducer to round and flat ducts.

Code	Dimensions [mm]			
	cxb	Ø D	f	a
115	58x114	103	62	32

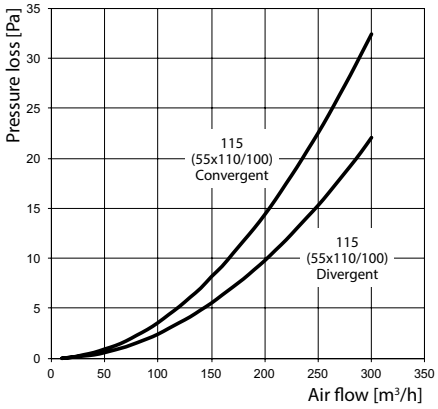

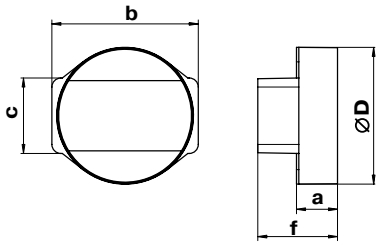

Reducer for flat and round ducts

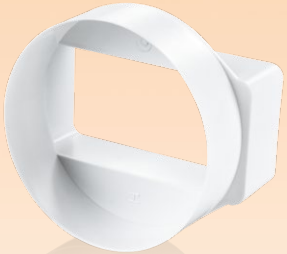

Application

- Supply and exhaust ventilation of various premises.
- Flat to round duct connection.

Design

- Made of white plastic.
- Connecting dimensions: 55x110-100 mm.
- Reducer has direct connection to flat air ducts and connection through connector to round ducts.

Code	Dimensions [mm]			
	cxb	Ø D	f	a
1156	58x114	100	62	32

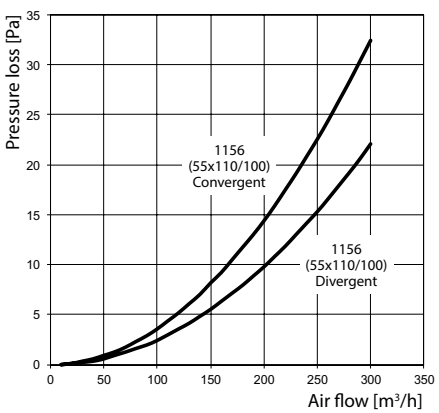

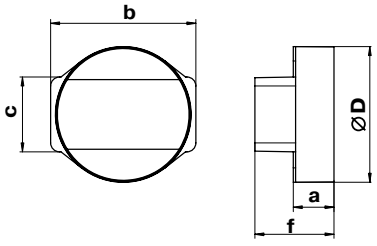

Wall plate with flange



Application

- Supply and exhaust ventilation of various premises.
- Connection of air ducts to ventilation shafts.
- Decoration of mounting openings.

Design

- Made of white plastic.
- Screw fixing to wall.
- Connecting sizes: 60x122 mm.

Code	Dimensions [mm]						
	a	b	c	d	D	e	E
750	126	172	3	65	113	60	65

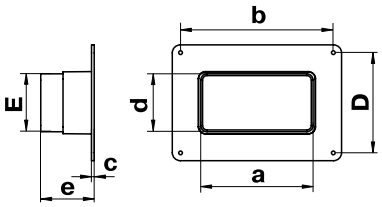

Round to flat connector (symmetric)



Application

- Supply and exhaust ventilation of various premises.
- Connection of round and flat ducts.

Design

- Made of white plastic.
- Direct connection flat duct, connection to round duct with connector.
- Connecting ducts: 100-60x122 mm.

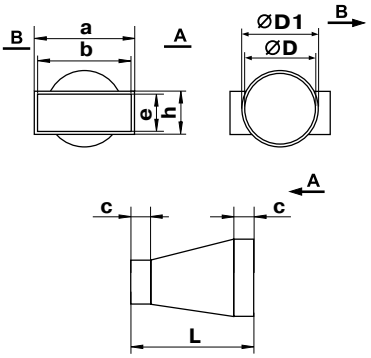

Code	Dimensions [mm]							
	a	b	c	Ø D	Ø D1	e	h	L
7112	124	122	30	100	103	60	64	137

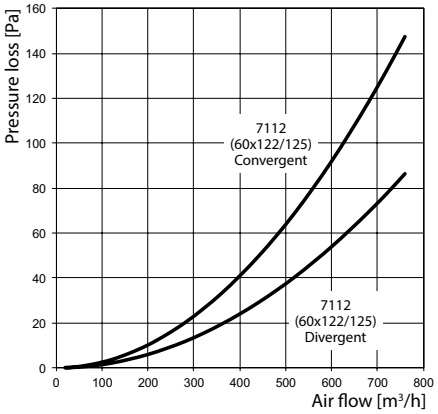

ROUND AND FLAT FOLDING PVC DUCT SYSTEM

Introducing folding plastic ducts – an innovative and versatile solution for ventilation systems from VENTS. The folding duct construction benefits logistics and results in significant space savings immediately apparent while storing and handling the products.

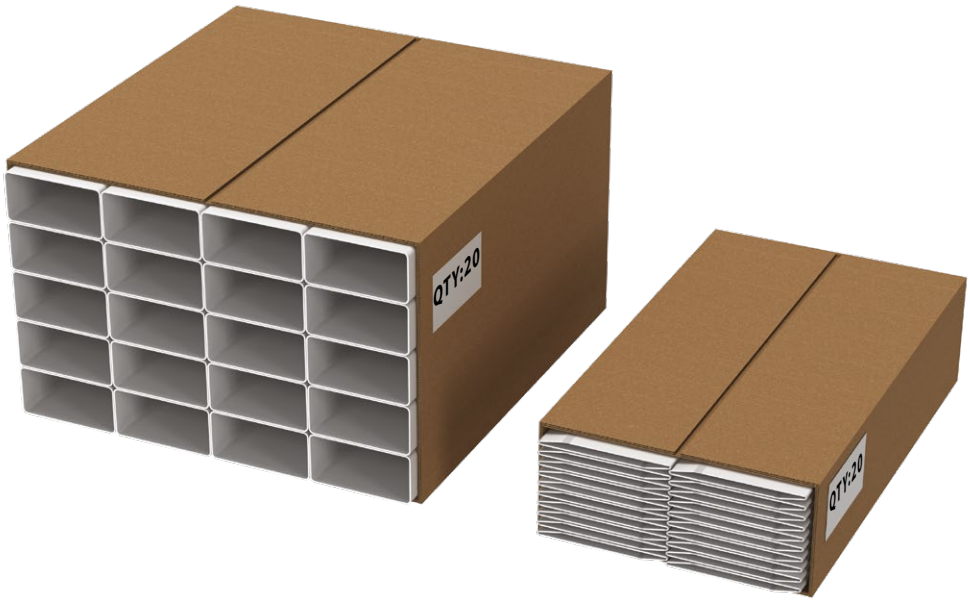

The compact folding duct from VENTS offer a number of advantages:

- 40 % higher transportation efficiency – more units per dispatch
- 60 % less warehouse storage space required
- Improved showroom stock diversity – even at small shops
- 20 % less time required for duct processing and fastening
- Easy and efficient mounting, better fit of parts made of elastic polymer material
- Compatible with the standard connectors and fixtures of PLASTIVENT air duct systems

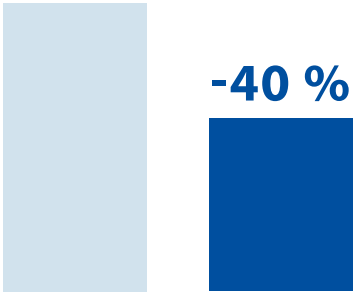

TRANSPORT COST SAVINGS

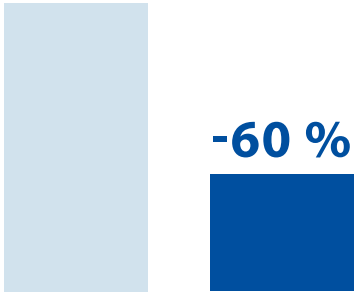

STORAGE SPACE SAVINGS

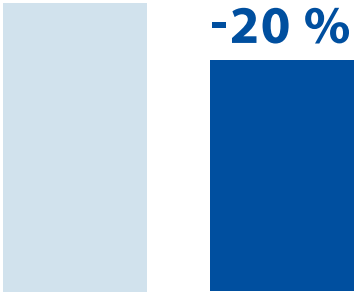

TIME SAVINGS IN PROCESSING AND INSTALLATION OF ELEMENTS

Round duct



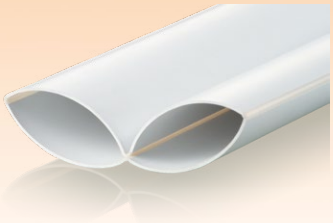

Purpose

- Supply and exhaust ventilation systems of various spaces
- Building round ventilation ductwork systems

Construction

- White PVC plastic
- Diameter: 100
- Duct length ranges from 350 to 2.500 mm
- Joined by means of appropriate diameter connectors

Code	Dimensions [mm]		
	D	D1	L
10035-1	100	103	350
1005-1	100	103	500
1010-1	100	103	1000
1015-1	100	103	1500
1020-1	100	103	2000
1025-1	100	103	2500

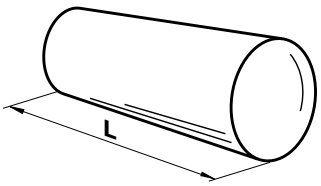

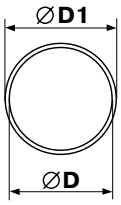

Flat duct

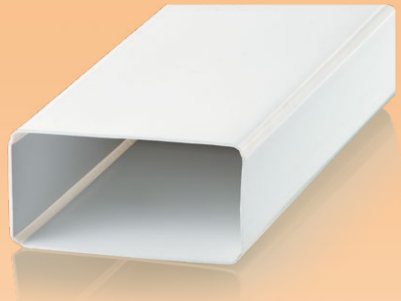

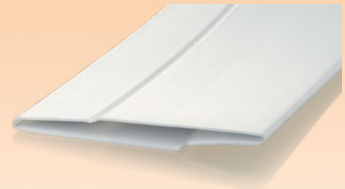

Purpose

- Supply and exhaust ventilation systems of various spaces
- Building flat ventilation ductwork systems

Construction

- White PVC plastic
- Cross-section: 55x110
- Duct length ranges from 350 to 2.500 mm
- Joined by means of appropriate section connectors

Code	Dimensions [mm]				
	a	b	a1	b1	L
50035-1	55	110	52	107	350
5005-1	55	110	52	107	500
5010-1	55	110	52	107	1000
5015-1	55	110	52	107	1500
5020-1	55	110	52	107	2000
5025-1	55	110	52	107	2500

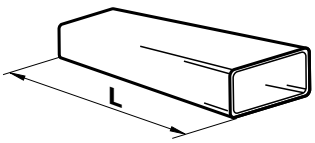

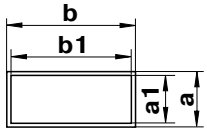

ACCESS DOORS FOR ACCESSING CONCEALED EQUIPMENT AND UTILITY LINES



Access doors
D (D2) series
Plastic
page 397



Access doors
DPV series
Plastic
page 398



Access doors
DZ series
Plastic
(with lock)
page 399



Access doors
DD series
Plastic
(double sided hinges)
page 400



Access doors
DM series
Metal
page 401



Access doors
DMZ series
Metal
(with lock)
page 402



Access doors
DMR series
Metal
page 403



Access doors
DMV series
Metal
page 404



Access doors
DKP series
Recessed for ceramic tiles
page 405



Access doors
DKM series
Recessed for ceramic tiles
page 406



Access doors
DG series
Designed for plasterboard wall or ceiling application
page 407

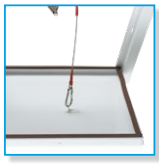

Access doors
DPM series
Designed for ceiling mounting
page 408

D series



D2 series



Plastic access doors opening from either side

Application

- Designed for wall or ceiling application.
- Enable quick and convenient access to concealed equipment and utility lines.
- Suitable for high-humidity areas.
- Protected by national patents worldwide.

Design

- Made of high-quality ABS plastic.
- Left or right-side opening.
- Press gently to open and close.
- The swinging D2 doors provide maximum clearance while accessing utility lines.
- A wide range of sizes.

Mounting

- Easy mounting using mortar or glue.
- Universal mountings for left or right-side opening.
- Easy servicing.

Sample installations

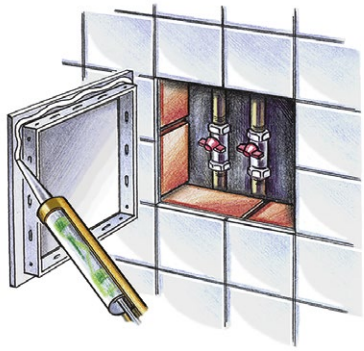

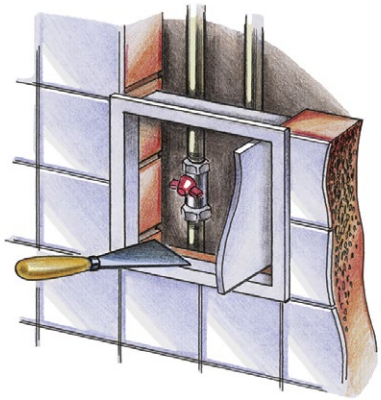

Dimensions

Model	Dimensions [mm]							
	H	B	H1	B1	H2	L1	L	B2
D 100x100	137	137	93	93	98	5	25	98
D 100x200	216	120	191	93	195	5	25	98
D 150x150	167	167	123	123	147	5	25	147
D 150x200	217	167	173	123	197	5	25	147
D 150x300	317	167	273	123	297	5	25	147
D 200x200	217	217	173	173	197	5	25	197
D 200x250	267	217	223	173	247	5	25	197
D 200x300	317	217	273	173	297	5	25	197
D 200x400	417	217	373	173	397	5	25	197
D 200x500	517	217	473	173	497	5	25	197
D 250x250	267	267	246	246	247	5	25	247
D 250x300	317	267	273	223	327	5	25	247
D 250x400	417	267	373	223	397	5	25	247
D 300x300	317	317	273	273	297	5	25	297
D 300x400	417	317	373	273	397	5	25	297
D 300x500	517	317	473	273	497	5	25	297
D 300x600	617	317	573	273	597	5	25	297
D 400x500	517	417	473	373	497	5	25	397
D 400x600	617	417	573	373	597	5	25	397
D2 300x300	317	288	273	244	297	5	25	268
D2 400x400	416	388	372	344	397	5	25	370

D series

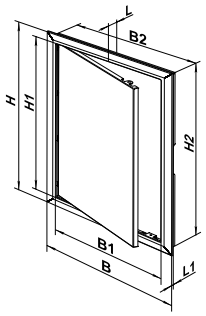

D2 series

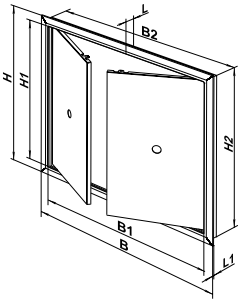

Color options

White | Beige | Grey | Sky Blue | Beige Marble | Grey Marble | Blue Marble | Green Marble

DPV series



Plastic access doors opening from either side

Application

- Designed for wall or ceiling application.
- Enable quick and convenient access to concealed equipment and utility lines.
- Suitable for high-humidity areas.
- Protected by national patents worldwide.

Design

- Made of high-quality ABS plastic.
- Left or right-side opening.
- Press gently to open and close.
- A protecting insect screen may be installed as an option **(DPV 200x300 s)**.

Mounting

- Easy mounting using mortar or glue.
- Universal mountings for left or right-side opening.
- Easy servicing.

Dimensions

Model	Dimensions [mm]							
	H	B	H1	B1	H2	L1	L	B2
DPV 200x300	317	217	273	173	296	6.5	19.5	196

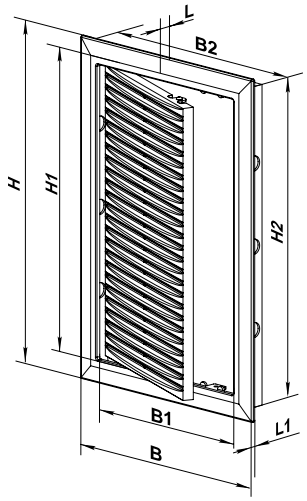

Color options

White | Beige | Grey | Sky Blue | Beige Marble | Grey Marble | Blue Marble | Green Marble

DZ series



Plastic access doors
with key lock

Application

- Designed for wall or ceiling application.
- Enable quick and convenient access to concealed equipment and utility lines.
- Suitable for high-humidity areas.
- Protected by national patents worldwide.

Design

- Made of high-quality ABS plastic.
- Left or right-side opening.
- Equipped with a key lock.

Mounting

- Easy mounting using mortar or glue.
- Universal mountings for left or right-side opening.
- Easy servicing.

Sample installations

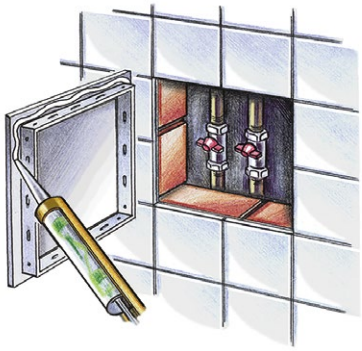

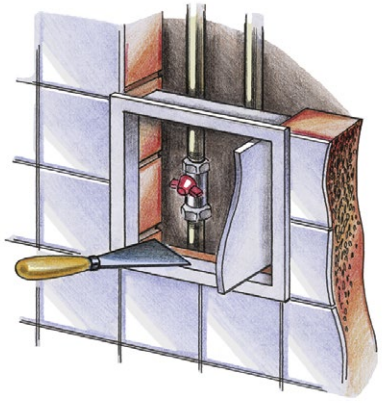

Dimensions

Model	Dimensions [mm]							
	H	B	H1	B1	H2	L1	L	B2
DZ 150x300	317	167	273	123	297	5	25	147
DZ 250x400	417	267	373	223	397	5	25	247
DZ 300x500	517	317	473	273	497	5	25	297
DZ 300x600	617	317	573	273	597	5	25	297
DZ 400x500	517	417	473	373	497	5	25	397
DZ 400x600	617	417	573	373	597	5	25	397

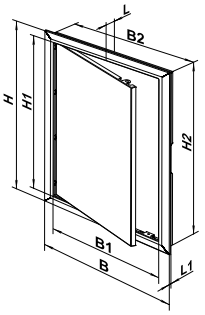

Color options

White | Beige | Grey | Sky Blue | Beige Marble | Grey Marble | Blue Marble | Green Marble

DD series





Plastic access doors with double-sided hinges and paint-ready surface

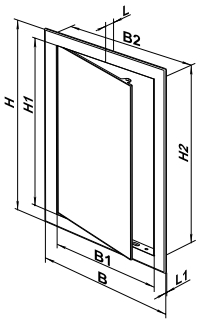

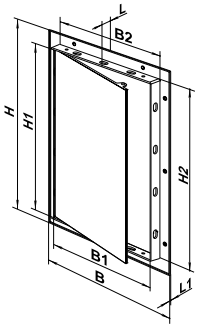

Application

- Designed for wall or ceiling application.
- Enable quick and convenient access to concealed equipment and utility lines.
- Concealed mounting for esthetic appearance.
- Suitable for high-humidity areas.
- Protected by national patents worldwide.

Design

- Made of high-quality ABS plastic.
- The door surface is ready for acrylic and water-dispersion paint or wallpaper application.
- Left or right-side opening.
- Press gently to open and close.
- A wide range of sizes.

Mounting

- Easy mounting using mortar or glue.
- Universal mountings for left or right-side opening.
- Double-sided hinges.
- Easy servicing.

Sample installations

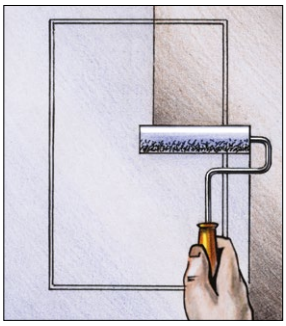



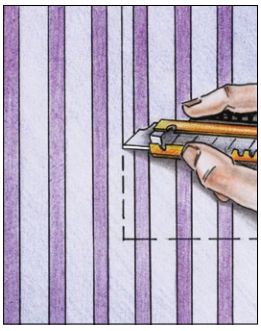



Dimensions

Model	Dimensions [mm]							
	H	B	H1	B1	H2	L1	L	B2
DD 200x300	336	236	291	189	297	3	20	197

Color options

White | Beige | Grey | Sky Blue | Beige Marble | Grey Marble | Blue Marble | Green Marble

DM series



Metal access doors



Magnetic latch

Application

- Designed for wall application.
- Enable quick and convenient access to concealed equipment and utility lines.
- Suitable for high-humidity areas.
- Protected by national patents worldwide.

Design

- Made of high-quality steel with a durable powder coating.
- The use of zinc phosphate compound ensures 100 % coating integrity and provides a reliable corrosion protection.
- Left or right-side opening.
- Equipped with a magnetic latch for convenient opening and closing by gentle pressure.
- A wide range of sizes.
- Custom sizes are available upon request.

Mounting

- Easy mounting using mortar or glue.
- Universal mountings for left or right-side opening.
- Easy servicing.

Dimensions

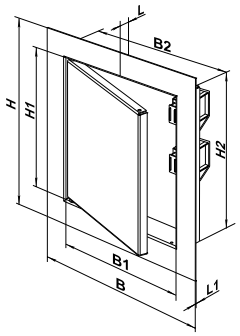

Model	Dimensions [mm]						
	H	B	H1	B2	H2	B1	L
DM 100x100	136.5	136.5	96.5	98.1	98.1	96.5	25
DM 150x150	186.5	186.5	146.5	148.1	148.1	146.5	25
DM 150x200	236.5	186.5	196.5	148.1	198.1	146.5	25
DM 150x250	286.5	186.5	246.5	148.1	248.1	146.5	25
DM 150x300	336.5	186.5	296.5	148.1	298.1	146.5	25
DM 200x200	236.5	236.5	196.5	198.1	198.1	196.5	25
DM 200x250	286.5	236.5	246.5	198.1	248.1	196.5	25
DM 200x300	336.5	236.5	296.5	198.1	298.1	196.5	25
DM 200x350	386.5	236.5	346.5	198.1	348.1	196.5	25
DM 200x400	436.5	236.5	396.5	198.1	398.1	196.5	25
DM 200x500	536.5	236.5	496.5	198.1	498.1	196.5	25
DM 225x300	336.5	261.5	296.5	223.1	298.1	221.5	25
DM 225x590	626.5	261.5	586.5	223.1	588.1	221.5	25
DM 250x250	286.5	286.5	246.5	248.1	248.1	246.5	25
DM 250x300	336.5	286.5	296.5	248.1	298.1	246.5	25
DM 250x350	386.5	286.5	346.5	248.1	348.1	246.5	25
DM 250x400	436.5	286.5	396.5	248.1	398.1	246.5	25
DM 250x450	486.5	286.5	446.5	248.1	448.1	246.5	25
DM 300x200	236.5	336.5	196.5	298.1	198.1	296.5	25
DM 300x300	336.5	336.5	296.5	298.1	298.1	296.5	25
DM 300x400	436.5	336.5	396.5	298.1	398.1	296.5	25
DM 300x500	536.5	336.5	496.5	298.1	498.1	296.5	25
DM 300x600	636.5	336.5	596.5	298.1	598.1	296.5	25
DM 350x350	386.5	386.5	346.5	348.1	348.1	346.5	25
DM 400x400	436.5	436.5	396.5	398.1	398.1	396.5	25
DM 400x500	536.5	436.5	496.5	398.1	498.1	396.5	25
DM 400x600	636.5	436.5	596.5	398.1	598.1	396.5	25
DM 450x250	286.5	486.5	246.5	448.1	248.1	446.5	25
DM 450x450	486.5	486.5	446.5	448.1	448.1	446.5	25
DM 500x500	536.5	536.5	496.5	498.1	498.1	496.5	25
DM 500x600	636.5	536.5	596.5	498.1	598.1	496.5	25
DM 500x800	836.5	536.5	796.5	498.1	798.1	496.5	25
DM 555x555	591.5	591.5	551.5	553.1	553.1	551.5	25
DM 600x400	436.5	636.5	396.5	598.1	398.1	596.5	25
DM 600x600	636.5	636.5	596.5	598.1	598.1	596.5	25
DM 600x800	836.5	636.5	796.5	598.1	798.1	596.5	25

Color options

White | Beige | Brown | Grey | Sky Blue | Black

DMZ series



Metal access doors



Key lock

Application

- Designed for wall or ceiling application.
- Enable quick and convenient access to concealed equipment and utility lines.
- Suitable for high-humidity areas.
- Protected by national patents worldwide.

Design

- Made of high-quality steel with a durable powder coating.
- The use of zinc phosphate compound ensures 100 % coating integrity and provides a reliable corrosion protection.
- Left or right-side opening.
- Equipped with a key lock.
- A wide range of sizes.
- Custom sizes are available upon request.

Mounting

- Easy mounting using mortar or glue.
- Universal mountings for left or right-side opening.
- Easy servicing.

Dimensions

Model	Dimensions [mm]						
	H	B	H1	B2	H2	B1	L
DMZ 100x100	136.5	136.5	96.5	98.1	98.1	96.5	25
DMZ 150x150	186.5	186.5	146.5	148.1	148.1	146.5	25
DMZ 150x200	236.5	186.5	196.5	148.1	198.1	146.5	25
DMZ 150x250	286.5	186.5	246.5	148.1	248.1	146.5	25
DMZ 150x300	336.5	186.5	296.5	148.1	298.1	146.5	25
DMZ 200x200	236.5	236.5	196.5	198.1	198.1	196.5	25
DMZ 200x250	286.5	236.5	246.5	198.1	248.1	196.5	25
DMZ 200x300	336.5	236.5	296.5	198.1	298.1	196.5	25
DMZ 200x350	386.5	236.5	346.5	198.1	348.1	196.5	25
DMZ 200x400	436.5	236.5	396.5	198.1	398.1	196.5	25
DMZ 200x500	536.5	236.5	496.5	198.1	498.1	196.5	25
DMZ 225x300	336.5	261.5	296.5	223.1	298.1	221.5	25
DMZ 225x590	626.5	261.5	586.5	223.1	588.1	221.5	25
DMZ 250x250	286.5	286.5	246.5	248.1	248.1	246.5	25
DMZ 250x300	336.5	286.5	296.5	248.1	298.1	246.5	25
DMZ 250x350	386.5	286.5	346.5	248.1	348.1	246.5	25
DMZ 250x400	436.5	286.5	396.5	248.1	398.1	246.5	25
DMZ 250x450	486.5	286.5	446.5	248.1	448.1	246.5	25
DMZ 300x200	236.5	336.5	196.5	298.1	198.1	296.5	25
DMZ 300x300	336.5	336.5	296.5	298.1	298.1	296.5	25
DMZ 300x400	436.5	336.5	396.5	298.1	398.1	296.5	25
DMZ 300x500	536.5	336.5	496.5	298.1	498.1	296.5	25
DMZ 300x600	636.5	336.5	596.5	298.1	598.1	296.5	25
DMZ 350x350	386.5	386.5	346.5	348.1	348.1	346.5	25
DMZ 400x400	436.5	436.5	396.5	398.1	398.1	396.5	25
DMZ 400x500	536.5	436.5	496.5	398.1	498.1	396.5	25
DMZ 400x600	636.5	436.5	596.5	398.1	598.1	396.5	25
DMZ 450x250	286.5	486.5	246.5	448.1	248.1	446.5	25
DMZ 450x450	486.5	486.5	446.5	448.1	448.1	446.5	25
DMZ 500x500	536.5	536.5	496.5	498.1	498.1	496.5	25
DMZ 500x600	636.5	536.5	596.5	498.1	598.1	496.5	25
DMZ 500x800	836.5	536.5	796.5	498.1	798.1	496.5	25
DMZ 555x555	591.5	591.5	551.5	553.1	553.1	551.5	25
DMZ 600x400	436.5	636.5	396.5	598.1	398.1	596.5	25
DMZ 600x600	636.5	636.5	596.5	598.1	598.1	596.5	25
DMZ 600x800	836.5	636.5	796.5	598.1	798.1	596.5	25

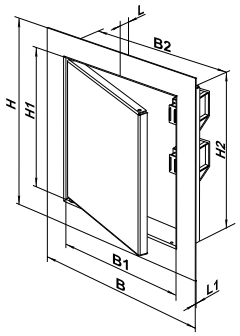

Color options

White | Beige | Brown | Grey | Sky Blue | Black

DMR series



Metal access doors
with a plastic handle



Plastic handle provides
additional convenience while opening
and closing

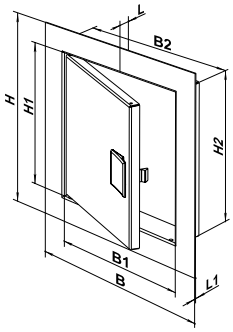

Application

- Designed for wall application.
- Enable quick and convenient access to concealed equipment and utility lines.
- Suitable for high-humidity areas.
- Protected by national patents worldwide.

Design

- Made of high-quality steel with a durable powder coating.
- The use of zinc phosphate compound ensures 100 % coating integrity and provides a reliable corrosion protection.
- Left or right-side opening.
- Equipped with a plastic handle for easy opening and closing.
- A wide range of sizes.
- Custom sizes are available upon request.

Mounting

- Easy mounting using mortar or glue.
- Universal mountings for left or right-side opening.
- Easy servicing.

Dimensions

Model	Dimensions [mm]						
	H	B	H1	B2	H2	B1	L
DMR 100x100	136.5	136.5	96.5	98.1	98.1	96.5	25
DMR 150x150	186.5	186.5	146.5	148.1	148.1	146.5	25
DMR 150x200	236.5	186.5	196.5	148.1	198.1	146.5	25
DMR 150x250	286.5	186.5	246.5	148.1	248.1	146.5	25
DMR 150x300	336.5	186.5	296.5	148.1	298.1	146.5	25
DMR 200x200	236.5	236.5	196.5	198.1	198.1	196.5	25
DMR 200x250	286.5	236.5	246.5	198.1	248.1	196.5	25
DMR 200x300	336.5	236.5	296.5	198.1	298.1	196.5	25
DMR 200x350	386.5	236.5	346.5	198.1	348.1	196.5	25
DMR 200x400	436.5	236.5	396.5	198.1	398.1	196.5	25
DMR 225x300	336.5	261.5	296.5	223.1	298.1	221.5	25
DMR 225x590	626.5	261.5	586.5	223.1	588.1	221.5	25
DMR 250x250	286.5	286.5	246.5	248.1	248.1	246.5	25
DMR 250x300	336.5	286.5	296.5	248.1	298.1	246.5	25
DMR 250x350	386.5	286.5	346.5	248.1	348.1	246.5	25
DMR 250x400	436.5	286.5	396.5	248.1	398.1	246.5	25
DMR 250x450	486.5	286.5	446.5	248.1	448.1	246.5	25
DMR 300x200	236.5	336.5	196.5	298.1	198.1	296.5	25
DMR 300x300	336.5	336.5	296.5	298.1	298.1	296.5	25
DMR 300x400	436.5	336.5	396.5	298.1	398.1	296.5	25
DMR 300x500	536.5	336.5	496.5	298.1	498.1	296.5	25
DMR 300x600	636.5	336.5	596.5	298.1	598.1	296.5	25
DMR 350x350	386.5	386.5	346.5	348.1	348.1	346.5	25
DMR 400x400	436.5	436.5	396.5	398.1	398.1	396.5	25
DMR 400x500	536.5	436.5	496.5	398.1	498.1	396.5	25
DMR 400x600	636.5	436.5	596.5	398.1	598.1	396.5	25
DMR 450x250	286.5	486.5	246.5	448.1	248.1	446.5	25
DMR 450x450	486.5	486.5	446.5	448.1	448.1	446.5	25
DMR 500x500	536.5	536.5	496.5	498.1	498.1	496.5	25
DMR 500x600	636.5	536.5	596.5	498.1	598.1	496.5	25
DMR 500x800	836.5	536.5	796.5	498.1	798.1	496.5	25
DMR 555x555	591.5	591.5	551.5	553.1	553.1	551.5	25
DMR 600x400	436.5	636.5	396.5	598.1	398.1	596.5	25
DMR 600x600	636.5	636.5	596.5	598.1	598.1	596.5	25
DMR 600x800	836.5	636.5	796.5	598.1	798.1	596.5	25

Color options

White | Beige | Brown | Grey | Sky Blue | Black

DMV series



Metal access doors
with ventilation openings

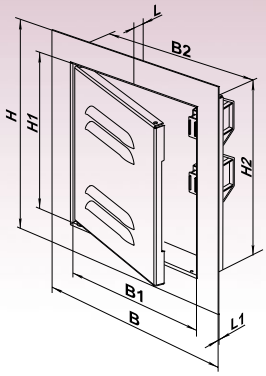

Application

- Designed for wall application.
- Enable quick and convenient access to concealed equipment and utility lines.
- Suitable for high-humidity areas.
- Protected by national patents worldwide.

Design

- Made of high-quality steel with a durable powder coating.
- The use of zinc phosphate compound ensures 100 % coating integrity and provides a reliable corrosion protection.
- Ventilation openings supply additional air into the space behind the door.
- Left or right-side opening.
- Equipped with a plastic handle for easy opening and closing.
- A wide range of sizes.
- Custom sizes are available upon request.

Mounting

- Easy mounting using mortar or glue.
- Universal mountings for left or right-side opening.
- Easy servicing.

Dimensions

Model	Dimensions [mm]						
	H	B	H1	B2	H2	B1	L
DMV 100x100	136.5	136.5	96.5	98.1	98.1	96.5	25
DMV 150x150	186.5	186.5	146.5	148.1	148.1	146.5	25
DMV 150x200	236.5	186.5	196.5	148.1	198.1	146.5	25
DMV 150x250	286.5	186.5	246.5	148.1	248.1	146.5	25
DMV 150x300	336.5	186.5	296.5	148.1	298.1	146.5	25
DMV 200x200	236.5	236.5	196.5	198.1	198.1	196.5	25
DMV 200x250	286.5	236.5	246.5	198.1	248.1	196.5	25
DMV 200x300	336.5	236.5	296.5	198.1	298.1	196.5	25
DMV 200x350	386.5	236.5	346.5	198.1	348.1	196.5	25
DMV 200x400	436.5	236.5	396.5	198.1	398.1	196.5	25
DMV 225x300	336.5	261.5	296.5	223.1	298.1	221.5	25
DMV 225x590	626.5	261.5	586.5	223.1	588.1	221.5	25
DMV 250x250	286.5	286.5	246.5	248.1	248.1	246.5	25
DMV 250x300	336.5	286.5	296.5	248.1	298.1	246.5	25
DMV 250x350	386.5	286.5	346.5	248.1	348.1	246.5	25
DMV 250x400	436.5	286.5	396.5	248.1	398.1	246.5	25
DMV 250x450	486.5	286.5	446.5	248.1	448.1	246.5	25
DMV 300x200	236.5	336.5	296.5	298.1	198.1	196.5	25
DMV 300x300	336.5	336.5	296.5	298.1	298.1	296.5	25
DMV 300x400	436.5	336.5	396.5	298.1	398.1	296.5	25
DMV 300x500	536.5	336.5	496.5	298.1	498.1	296.5	25
DMV 300x600	636.5	336.5	596.5	298.1	598.1	296.5	25
DMV 350x350	386.5	386.5	346.5	348.1	348.1	346.5	25
DMV 400x400	436.5	436.5	396.5	398.1	398.1	396.5	25
DMV 400x500	536.5	436.5	496.5	398.1	498.1	396.5	25
DMV 400x600	636.5	436.5	596.5	398.1	598.1	396.5	25
DMV 450x250	286.5	486.5	446.5	448.1	248.1	246.5	25
DMV 450x450	486.5	486.5	446.5	448.1	448.1	446.5	25
DMV 500x500	536.5	536.5	496.5	498.1	498.1	496.5	25
DMV 500x600	636.5	536.5	596.5	498.1	598.1	496.5	25
DMV 500x800	836.5	536.5	796.5	498.1	798.1	496.5	25
DMV 555x555	591.5	591.5	551.5	553.1	553.1	551.5	25
DMV 600x400	436.5	636.5	596.5	598.1	398.1	396.5	25
DMV 600x600	636.5	636.5	596.5	598.1	598.1	596.5	25
DMV 600x800	836.5	636.5	596.5	598.1	798.1	796.5	25

Color options

White | Beige | Brown | Grey | Sky Blue | Black

DKP series



Access doors on a PVC frame
for attaching ceramic tiles

Application

- Designed for wall installation and ceramic tile attachment.
- Enable quick and convenient access to concealed equipment and utility lines.
- Concealed mounting for esthetic appearance.
- Suitable for high-humidity areas.
- Protected by national patents worldwide.

Design

- The PVC profile frame contains magnets and hides the tile-to-tile gap.
- Metal plate for attaching ceramic tiles.
- Magnetic attachment of plate to the frame.
- Press gently to open and close or use a cup plunger.
- A wide range of sizes.

Mounting

- Easy installation using spacers lugs.
- Height-adjustable magnets enable perfect leveling of tiles to the wall surface.
- Ceramic tiles are easily glued to the plate.
- Easy servicing.

Sample installations



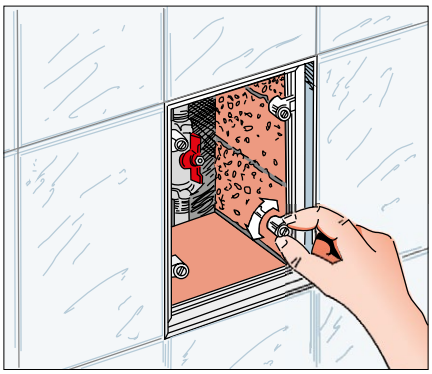

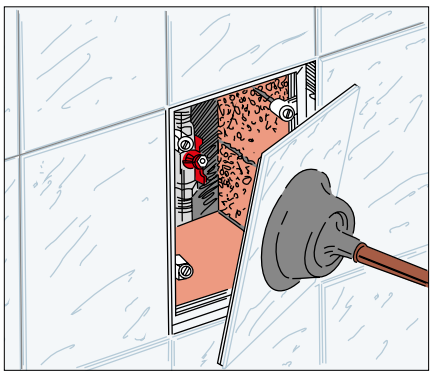

Dimensions

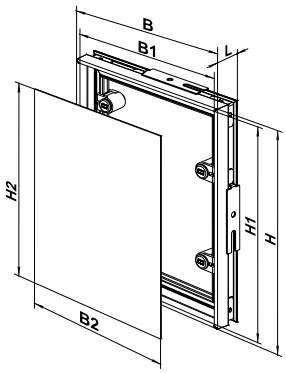

Model	Dimensions [mm]						
	B	H	B2	H2	B1	H1	L
DKP 150x150	156	156	145	145	153	153	30
DKP 150x200	156	206	145	195	153	203	30
DKP 150x300	156	306	145	295	153	303	30
DKP 200x200	206	206	195	195	203	203	30
DKP 200x250	206	256	195	245	203	253	30
DKP 200x300	206	306	195	295	203	303	30
DKP 200x350	206	356	195	345	203	353	30
DKP 200x400	206	406	195	395	203	403	30
DKP 200x450	206	456	195	445	203	453	30
DKP 200x500	206	506	195	495	203	503	30
DKP 250x250	256	256	245	245	253	253	30
DKP 250x300	256	306	245	295	253	303	30
DKP 250x350	256	356	245	345	253	353	30
DKP 250x400	256	406	245	395	253	403	30
DKP 300x300	306	306	295	295	303	303	30
DKP 300x350	306	356	295	345	303	353	30
DKP 300x400	306	406	295	395	303	403	30
DKP 300x450	306	456	295	445	303	453	30
DKP 300x500	306	506	295	495	303	503	30
DKP 400x400	406	406	395	395	403	403	30

DKM series



Access doors on a metal frame recessed for ceramic tiles

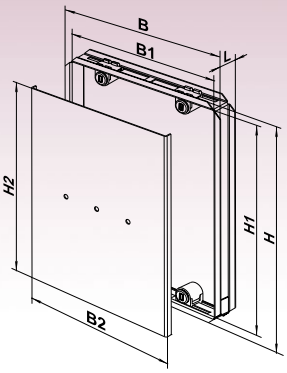

Application

- Designed for wall installation and ceramic tile attachment.
- Enable quick and convenient access to concealed equipment and utility lines.
- Concealed mounting for esthetic appearance.
- Suitable for high-humidity areas.
- Protected by national patents worldwide.

Design

- The metal frame contains magnets for plate attachment and hides the tile-to-tile gap.
- Metal plate for attaching ceramic tiles.
- Magnetic attachment of plate to the frame.
- Press gently to open and close or use a cup plunger.
- A wide range of sizes.

Mounting

- Easy installation using mounting foam or mortar.
- Height-adjustable magnets enable perfect leveling of tiles to the wall surface.
- Ceramic tiles are easily glued to the plate.
- Easy servicing.

Sample Installations

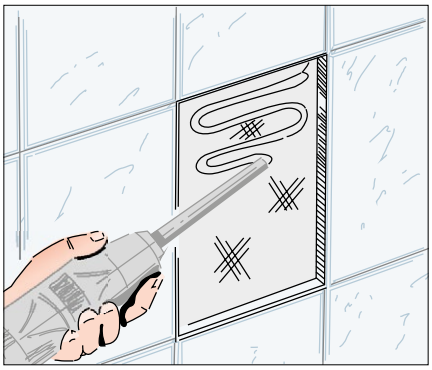

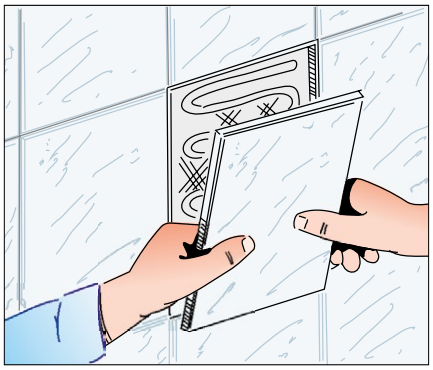

Dimensions

Model	Dimensions [mm]				
	B	H	B2	H2	L
DKM 150x150	163.6	163.6	150	150	26
DKM 150x200	163.6	213.6	150	200	26
DKM 150x250	163.6	263.6	150	250	26
DKM 150x300	163.6	313.6	150	300	26
DKM 200x200	213.6	213.6	200	200	26
DKM 200x250	213.6	263.6	200	250	26
DKM 200x300	213.6	313.6	200	300	26
DKM 200x350	213.6	363.6	200	350	26
DKM 200x400	213.6	413.6	200	400	26
DKM 200x450	213.6	463.6	200	450	26
DKM 200x500	213.6	513.6	200	500	26
DKM 250x250	263.6	263.6	250	250	26
DKM 250x300	263.6	313.6	250	300	26
DKM 250x350	263.6	363.6	250	350	26
DKM 250x400	263.6	413.6	250	400	26
DKM 300x300	313.6	313.6	300	300	26
DKM 300x350	313.6	363.6	300	350	26
DKM 300x400	313.6	413.6	300	400	26
DKM 300x450	313.6	463.6	300	450	26
DKM 300x500	313.6	513.6	300	500	26
DKM 400x400	413.6	413.6	400	400	26
DKM 400x500	413.6	513.6	400	500	26
DKM 500x500	513.6	513.6	500	500	26
DKM 600x600	613.6	613.6	600	600	26

DG series

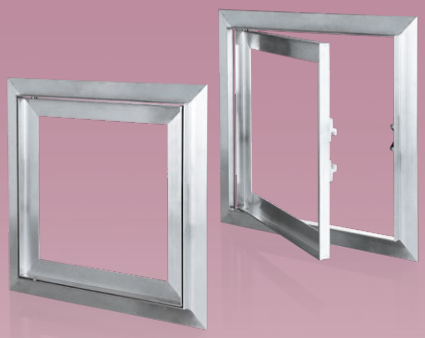

Access doors for plasterboard application

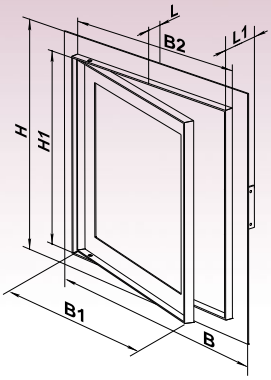

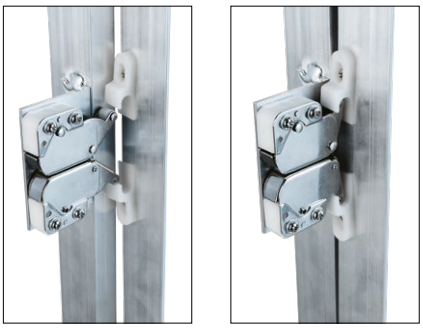

The special mechanism provides for secure locking

Application

- Designed for plasterboard walls and ceilings 12.5 and 15 mm thick.
- Enable quick and convenient access to concealed equipment and utility lines.
- Suitable for high-humidity areas.
- Protected by national patents worldwide.

Design

- The main structural frame and panel frame are made of aluminum profile.
- The special mechanism ensures secure locking, large-size doors are equipped with double locks.
- Left or right-side opening.
- Press gently to open and close.
- A wide range of sizes.
- Custom sizes are available upon request.

Mounting

- The doors are attached to aluminum profiles on self-tapping screws and flushed up with plasterboard on the front.
- Universal mountings for left or right-side opening.
- Easy servicing.

Sample Installations

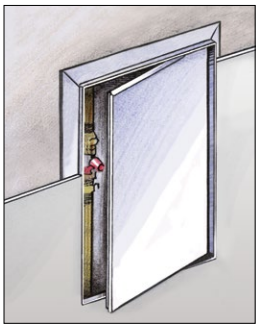
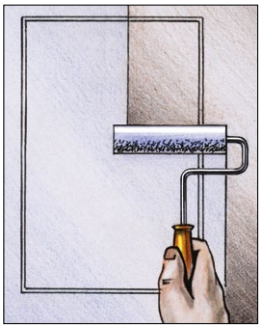

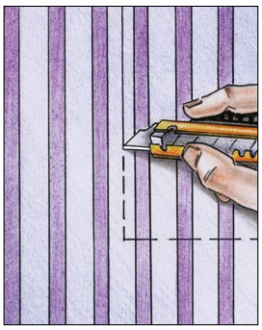

Dimensions

Model	Dimensions [mm]					
	H/B	H1/B1	B2	L	L1	Number of locks
DG 200x200	260	196	204	15	55	1
DG 300x300	360	296	304	15	55	1
DG 400x400	460	396	404	15	55	2
DG 500x500	560	496	504	15	55	2
DG 600x600	660	596	604	15	55	2

DPM series

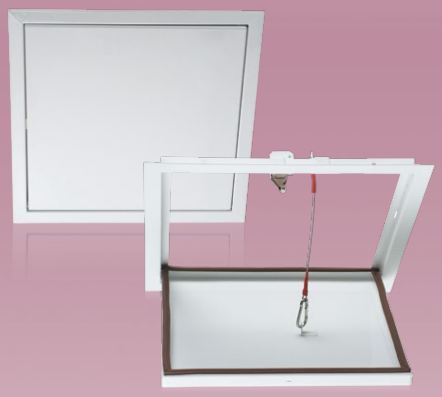

Access metal doors for ceiling mounting

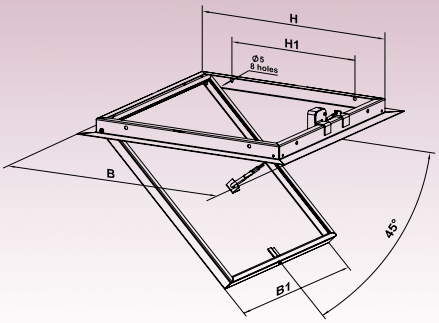

Application

- Designed for ceiling application.
- Enable quick and convenient access to concealed equipment and utility lines.
- Suitable for high-humidity areas.
- Protected by national patents worldwide.

Design

- Made of high-quality durable polymer-coated steel.
- The use of zinc phosphate compound ensures 100 % coating integrity and provides a reliable corrosion protection.
- Specially designed mechanical lock provides a safe door fixation.
- Easy opening and closing with a slight pressing.
- Custom sizes are available upon request.
- The doors are equipped with a galvanized steel safety rope with a snap hook to retain doors in a position that enables inspection works.
- The door opening angle with a safety rope is 45°.
- Open the snap hook if a wider opening angle is required for inspections.
- The doors are lined with a sealant for tight connection between the doors and the frame.

Mounting

- Screw fixation to the ceiling-mounted aluminium shape.





Dimensions

Model	Dimensions [mm]			
	□ B	□ B1	□ H	H1
DPM 300x300	336.5	296.5	298	200

PLASTIC HVAC GRILLES

Profiplast means ideal air flows distribution

Quality and functionality of ventilation and air conditioning depends a lot on end air distribution, supply and intake devices.

Profiplast are the professional air distribution systems with a great product variety to implement any technical and project designs that are featured with extreme durability.

The benefits of Profiplast products are due to the use of specially designed plastics . These offer the following advantages to consumers: Profiplast grilles produce no condensation, have excellent sound-insulating and corrosion-resistant properties. Moreover they are non-flammable and are easy to paint.

Plastic properties

Generally, plastic is the most widely used construction material due to the beneficial properties:

· Durability combined with a maintenance-free service life
· Extremely low heat conductivity and good sound insulation
· UV-resistance
· Good hygienic properties and easy to clean
· Detergent resistant
· The best balance of price and quality
· Corrosion- and decay-resistance
· Eco-friendly because it is 100 % recyclable

The goods made of specially designed plastic:

· Prevent fire propagation because of their flame-proof qualities and have high fire safety properties.
· Totally recyclable at the end of the service life to get new products.
· Offer the best combination of price and quality.

The specially designed plastic is widely used for all plastic technologies and its application range is very comprehensive. There is no other comparable material that is as usable and reliable for this application as Profiplast plastic. The specially designed plastic is the ideal solution for any application requiring low maintenance, good sound insulation, consistent use, heavy operation load, ease of servicing, low flammability and high eco requirements.

These properties make plastic the best solution for premises with high hygiene standards.


Supply and exhaust NHN (NUN) series grilles page 412

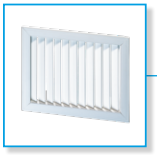
Supply and exhaust NVN (NUN) series grilles page 414


Exhaust GR series grilles page 416

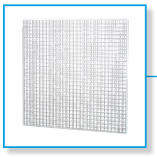
Supply and exhaust RD series grilles page 418

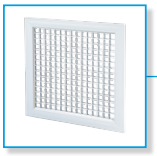
Supply and exhaust ND series grilles page 420


Supply and exhaust NK–3 series grilles page 422


Supply and exhaust NK–4 series grilles page 424

NHN (NUN) series



Ventilation grille with unregulated vertical inclined vanes

Application

- Supply and exhaust ventilation, heating and air conditioning networks in industrial, commercial and domestic premises.

Design

- Made of high-quality plastic.
- Weather- and temperature-resistant.
- Removable spring-loaded vanes for simple maintenance.
- Simple and quick mounting.

Colour modifications

white | brown | grey | beige

UV-resistant | Waterproof | Heat-resistant | Frostproof | Easy mounting | Fire-resistant | Antibacterial | Impact-resistant | Durable | Maintenance-free

Air flow distribution

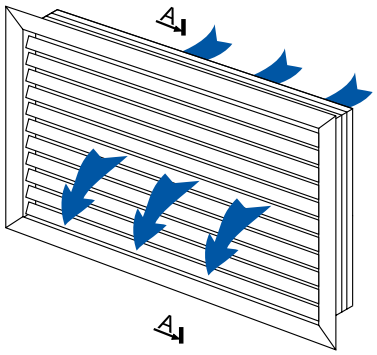



Pressure loss and sound power diagram

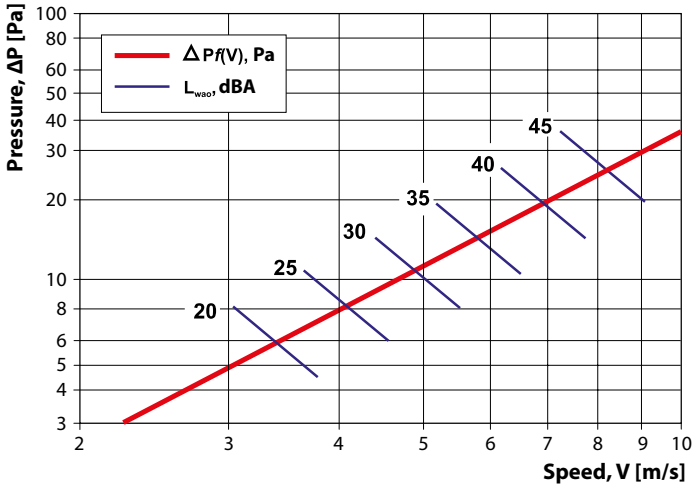

Overall dimensions

Model	Dimensions [mm]				Air pass [m²]
	H	L	h	l	
NUN 200×200	214	214	200	200	0.0066
NHN 300×200	214	303	200	289	0.0104
NHN 350×200	214	363	200	349	0.0131
NHN 400×200	214	392	200	378	0.0143
NHN 450×200	214	452	200	438	0.0170
NHN 500×200	214	512	200	498	0.0196
NHN 600×200	214	602	200	588	0.0235
NUN 300×300	303	303	289	289	0.0169
NHN 350×300	303	363	289	349	0.0212
NHN 400×300	303	392	289	378	0.0232
NHN 450×300	303	452	289	438	0.0275
NHN 500×300	303	512	289	498	0.0317
NHN 600×300	303	602	289	588	0.0381
NUN 350×350	363	363	349	349	0.0267
NHN 400×350	363	392	349	378	0.0292
NHN 450×350	363	452	349	438	0.0346
NHN 500×350	363	512	349	498	0.0399
NHN 600×350	363	602	349	588	0.0480
NUN 400×400	392	392	378	378	0.0321
NHN 450×400	392	452	378	438	0.0380
NHN 500×400	392	512	378	498	0.0439
NHN 600×400	392	602	378	588	0.0527
NUN 450×450	452	452	438	438	0.0451
NHN 500×450	452	512	438	498	0.0521
NHN 600×450	452	602	438	588	0.0626
NUN 500×500	512	512	498	498	0.0603
NHN 600×500	512	602	498	588	0.0724

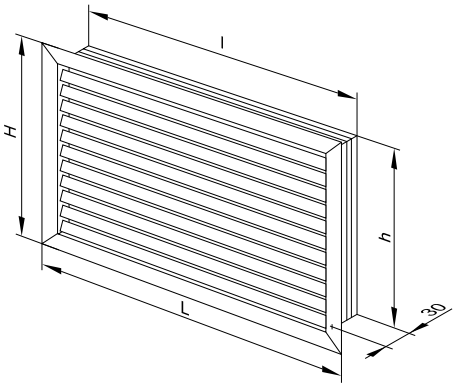

Model	Dimensions [mm]				Air pass [m²]
	H	L	h	l	
NUN 580×580	599	599	585	585	0.0755
NUN 600×600	602	602	588	588	0.0764
NHN 900×200	214	912	200	898	0.0341
NHN 900×300	303	912	289	898	0.0553
NHN 900×350	363	912	349	898	0.0696
NHN 900×400	392	912	378	898	0.0765
NHN 900×450	452	912	438	898	0.0909
NHN 900×500	512	912	498	898	0.1052
NHN 900×600	602	912	588	898	0.1266

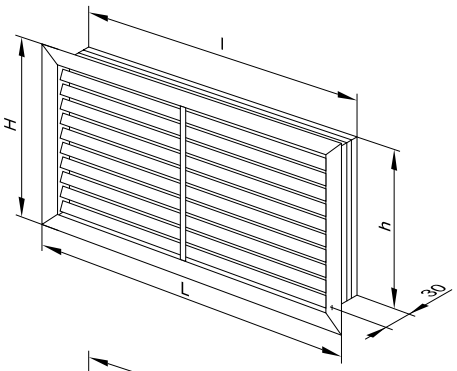

Model	Dimensions [mm]				Air pass [m²]
	H	L	h	l	
NHN 1200×300	303	1214	289	1200	0.0719
NHN 1200×350	363	1214	349	1200	0.0906
NHN 1200×400	392	1214	378	1200	0.0996
NHN 1200×450	452	1214	438	1200	0.1182
NHN 1200×500	512	1214	498	1200	0.1369
NHN 1200×600	602	1214	588	1200	0.1648
NHN 1350×300	303	1364	289	1350	0.0825
NHN 1350×350	363	1364	349	1350	0.1039
NHN 1350×400	392	1364	378	1350	0.1143
NHN 1350×450	452	1364	438	1350	0.1357
NHN 1350×500	512	1364	498	1350	0.1570
NHN 1350×600	602	1364	588	1350	0.1891

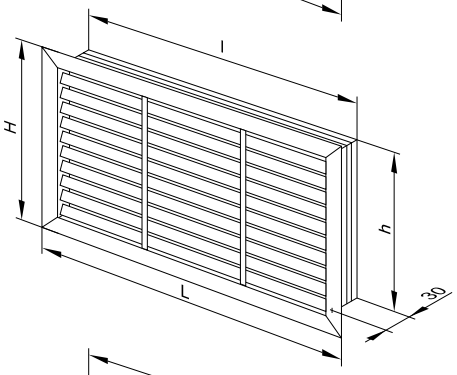

Model	Dimensions [mm]				Air pass [m²]
	H	L	h	l	
NHN 1500×300	303	1514	289	1500	0.0884
NHN 1500×350	363	1514	349	1500	0.1113
NHN 1500×400	392	1514	378	1500	0.1224
NHN 1500×450	452	1514	438	1500	0.1453
NHN 1500×500	512	1514	498	1500	0.1683
NHN 1500×600	602	1514	588	1500	0.2027

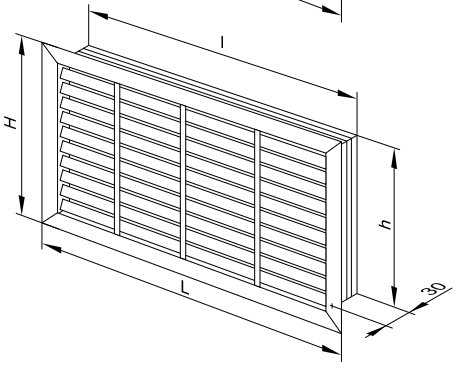

NVN (NUN) series



Ventilation grille with unregulated horizontal inclined vanes

Application

- Supply and exhaust ventilation, heating and air conditioning networks in industrial, commercial and domestic premises.

Design

- Made of high-quality plastic.
- Weather- and temperature-resistant.
- Removable spring-loaded vanes for simple maintenance.
- Simple and quick mounting.

Colour modifications

white | brown | grey | beige

UV-resistant | Waterproof | Heat-resistant | Frostproof | Easy mounting | Fire-resistant | Antibacterial | Impact-resistant | Durable | Maintenance-free

Air flow distribution

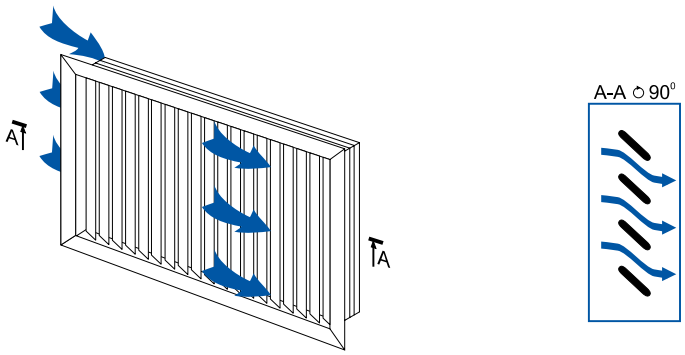

Pressure loss and sound power diagram

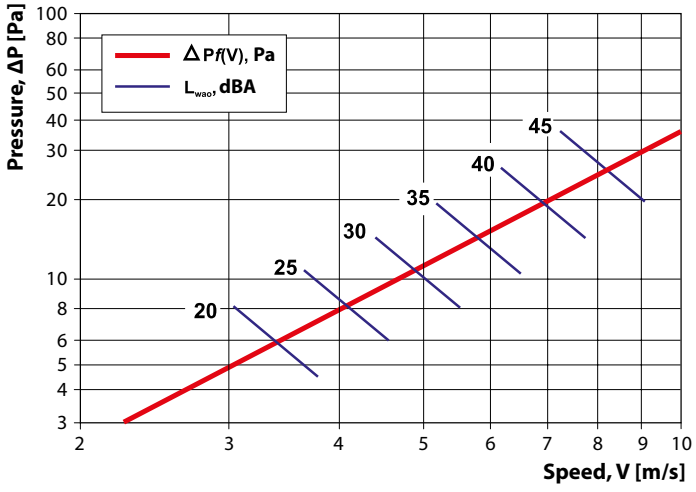

Overall dimensions

Model	Dimensions [mm]				Air pass [m²]
	H	L	h	l	
NUN 200×200	214	214	200	200	0.0066
NVN 300×200	214	303	200	289	0.0106
NVN 350×200	214	363	200	349	0.0134
NVN 400×200	214	392	200	378	0.0147
NVN 450×200	214	452	200	438	0.0174
NVN 500×200	214	512	200	498	0.0202
NVN 600×200	214	602	200	588	0.0243
NUN 300×300	303	303	289	289	0.0169
NVN 350×300	303	363	289	349	0.0213
NVN 400×300	303	392	289	378	0.0234
NVN 450×300	303	452	289	438	0.0278
NVN 500×300	303	512	289	498	0.0322
NVN 600×300	303	602	289	588	0.0387
NUN 350×350	363	363	349	349	0.0267
NVN 400×350	363	392	349	378	0.0293
NVN 450×350	363	452	349	438	0.0348
NVN 500×350	363	512	349	498	0.0402
NVN 600×350	363	602	349	588	0.0484
NUN 400×400	392	392	378	378	0.0321
NVN 450×400	392	452	378	438	0.0531
NVN 500×400	392	512	378	498	0.0441
NVN 600×400	392	602	378	588	0.0381
NUN 450×450	452	452	438	438	0.0451
NVN 500×450	452	512	438	498	0.0629
NVN 600×450	452	602	438	588	0.0522
NUN 500×500	512	512	498	498	0.0603
NVN 600×500	512	602	498	588	0.0726
NUN 580×580	599	599	585	585	0.0872
NUN 600×600	602	602	588	588	0.0862

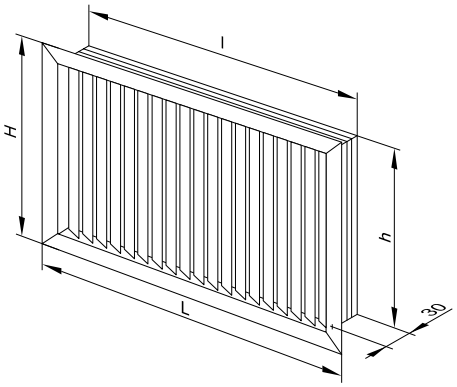

Model	Dimensions [mm]				Air pass [m²]
	H	L	h	l	
NVN 900×200	214	934	200	920	0.0365
NVN 900×300	303	934	289	920	0.0581
NVN 1200×300	303	1234	289	1220	0.0800
NVN 900×350	363	934	349	920	0.0727
NVN 1200×350	363	1234	349	1220	0.1001
NVN 900×400	392	934	378	920	0.0798
NVN1200×400	392	1234	378	1220	0.1098
NVN 900×450	452	934	438	920	0.0944
NVN 1200×450	452	1234	438	1220	0.1299
NVN 900×500	512	934	498	920	0.1090
NVN 1200×500	512	1234	498	1220	0.1500
NVN 900×600	602	934	588	920	0.1309
NVN 1200×600	602	1234	588	1220	0.1801

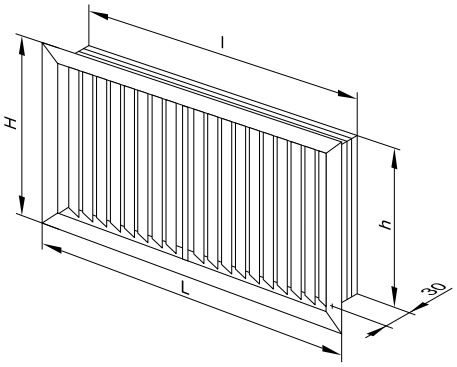

Model	Dimensions [mm]				Air pass [m²]
	H	L	h	l	
NVN 1350×300	303	1377	289	1363	0.0857
NVN 1500×300	303	1559	289	1545	0.0989
NVN 1350×350	363	1377	349	1363	0.1072
NVN 1500×350	363	1559	349	1545	0.1238
NVN 1350×400	392	1377	378	1363	0.1176
NVN 1500×400	392	1559	378	1545	0.1358
NVN 1350×450	452	1377	438	1363	0.1391
NVN 1500×450	452	1559	438	1545	0.1606
NVN 1350×500	512	1377	498	1363	0.1606
NVN 1500×500	512	1559	498	1545	0.1854
NVN 1350×600	602	1377	588	1363	0.1928
NVN 1500×600	602	1559	588	1545	0.2227

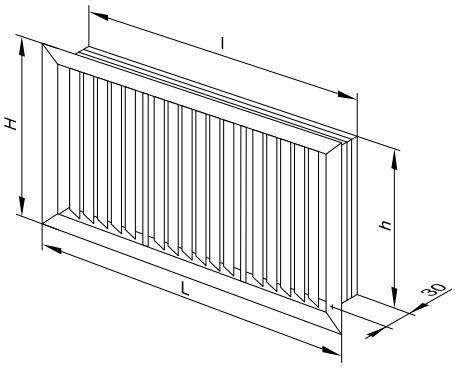

GR
series



Ventilation grille with gravity shutters

Application

- Exhaust ventilation, heating and air conditioning networks in industrial, commercial and domestic premises.

Design

- Made of high-quality plastic.
- Weather- and temperature-resistant.
- Removable spring-loaded vanes for simple maintenance.
- Simple and quick mounting.

Colour modifications

white | brown | grey | beige

UV-resistant | Waterproof | Heat-resistant | Frostproof | Easy mounting | Fire-resistant | Antibacterial | Impact-resistant | Durable | Maintenance-free

Air flow distribution

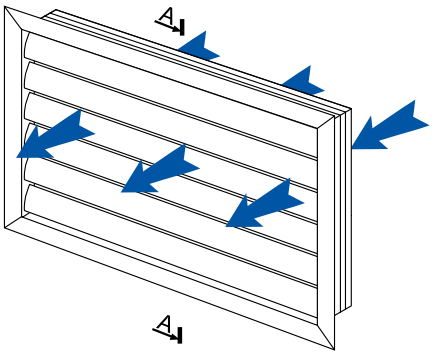

The shutters are closed (protection against backdraft)

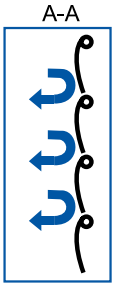

The shutters are opened

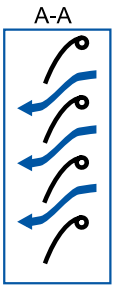

Pressure loss and sound power diagram

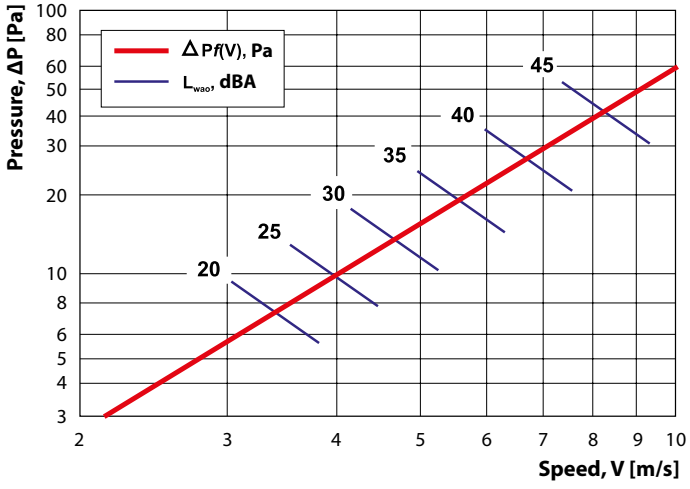

Overall dimensions

Model	Dimensions [mm]				Air pass [m²]
	H	L	h	l	
GR 300×300	303	303	289	289	0.0543
GR 350×300	303	362	289	348	0.0677
GR 400×300	303	422	289	408	0.1013
GR 450×300	303	464	289	450	0.1132
GR 500×300	303	514	289	500	0.1530
GR 600×300	303	598	289	584	0.1816
GR 350×350	362	362	348	348	0.1512
GR 400×350	362	422	348	408	0.0813
GR 500×350	362	514	348	500	0.1022
GR 600×350	362	598	348	584	0.1212
GR 400×400	422	422	408	408	0.0813
GR 450×400	422	464	408	450	0.1132
GR 500×400	422	514	408	500	0.1274
GR 600×400	422	598	408	584	0.1816
GR 600×600	598	598	584	584	0.1816

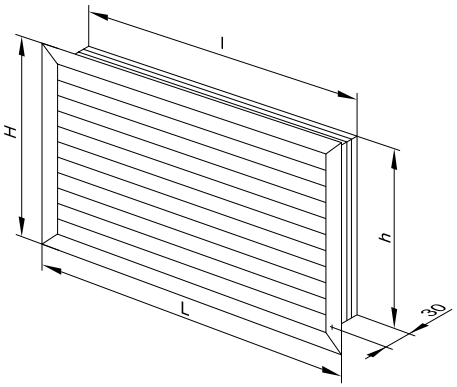

Model	Dimensions [mm]				Air pass [m²]
	H	L	h	l	
GR 900×300	303	914	289	900	0.1882
GR 1200×300	303	1214	289	1200	0.2563
GR 900×350	362	914	348	900	0.2347
GR 1200×350	362	1214	348	1200	0.3196
GR 900×400	422	914	408	900	0.2819
GR 1200×400	422	1214	408	1200	0.3840
GR 900×600	598	914	584	900	0.4205
GR 1200×600	598	1214	584	1200	0.5727

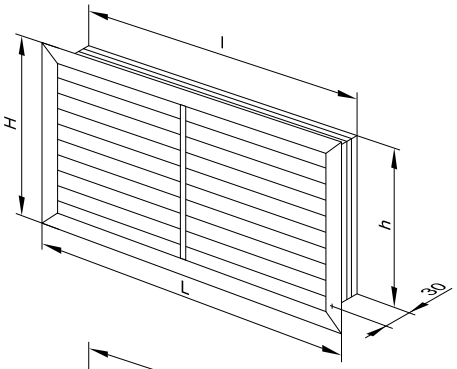

Model	Dimensions [mm]				Air pass [m²]
	H	L	h	l	
GR 1350×300	303	1364	289	1350	0.2856
GR 1500×300	303	1514	289	1500	0.3197
GR 1350×350	362	1364	348	1350	0.3561
GR 1500×350	362	1514	348	1500	0.3986
GR 1350×400	422	1364	408	1350	0.4278
GR 1500×400	422	1514	408	1500	0.4788
GR 1350×600	598	1364	584	1350	0.6381
GR 1500×600	598	1514	584	1500	0.7142

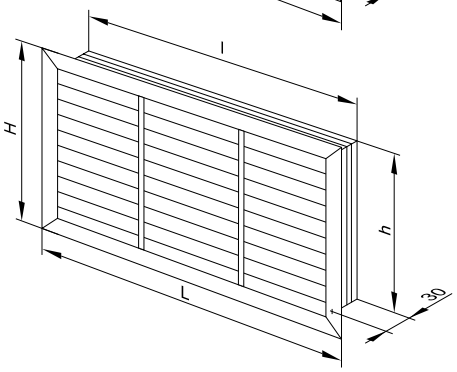

RD
series

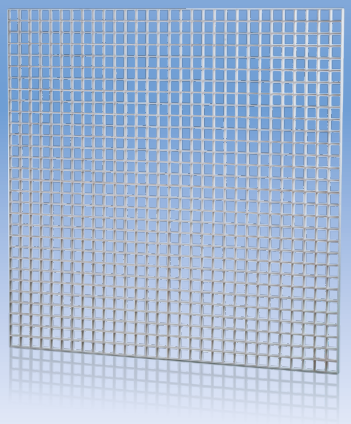

Decorative ventilation grille

Application

- Supply and exhaust ventilation, heating and air conditioning networks in industrial, commercial and domestic premises.

Design

- Made of high-quality plastic.
- Weather- and temperature-resistant.
- Simple and quick mounting.

Colour modifications





Air flow distribution

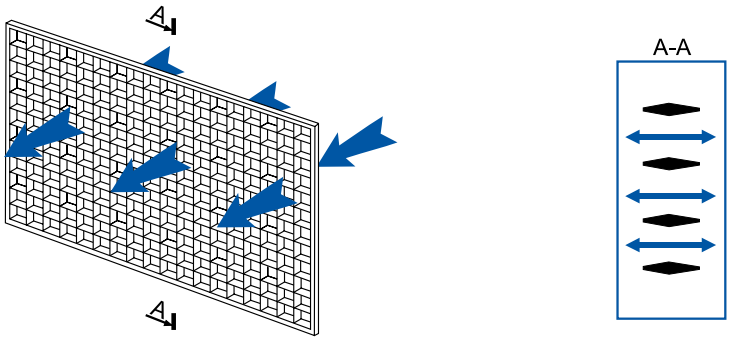

Pressure loss and sound power diagram

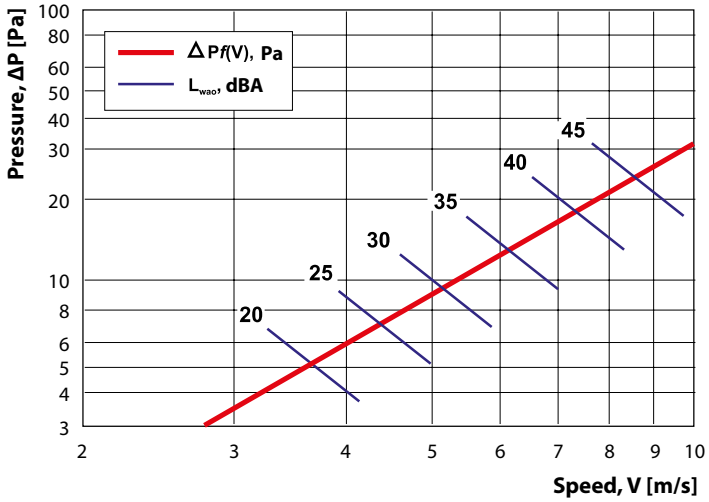

Overall dimensions

Model	Dimensions [mm]		
	L	H	b
RD 600/1 M	300	300	10
RD 600/2 M	600	300	10
RD 600 M	600	600	10
RD 600/6 M	600	900	10
RD 600/8 M	600	1200	10
RD 600/1 L	300	300	12
RD 600/2 L	600	300	12
RD 600 L	600	600	12
RD 600/6 L	600	900	12
RD 600/8 L	600	1200	12
RD 600/1	300	300	15
RD 600/2	600	300	15
RD 600	600	600	15
RD 600/6	600	900	15
RD 600/8	600	1200	15

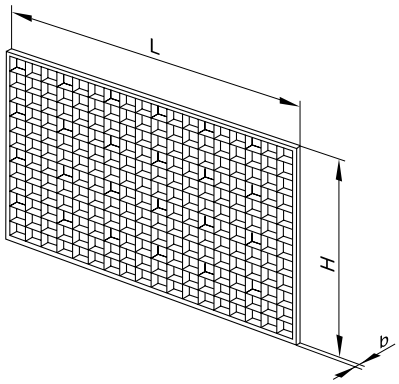

ND
series



Decorative ventilation grille

Application

- Supply and exhaust ventilation, heating and air conditioning networks in industrial, commercial and domestic premises.

Design

- Made of high-quality plastic.
- Weather- and temperature-resistant.
- Simple and quick mounting.

Colour modifications





Air flow distribution

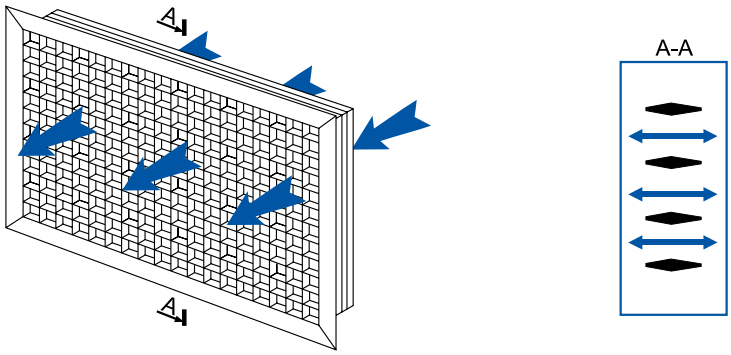

Pressure loss and sound power diagram

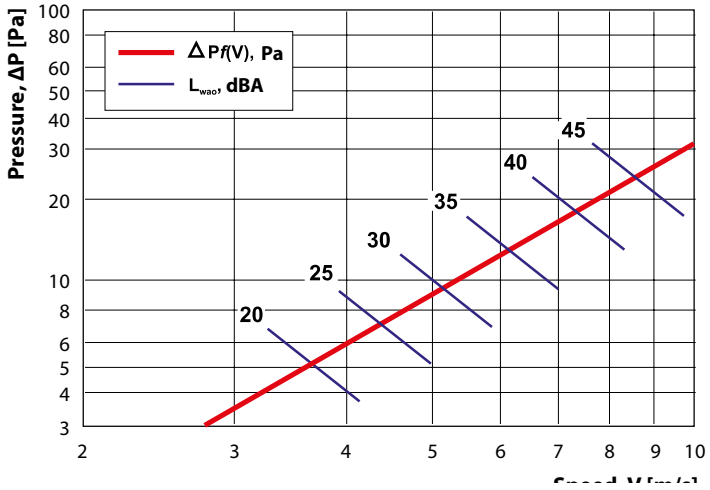

Overall dimensions

Model	Dimensions [mm]				Air pass [m²]
	H	L	h	l	
ND 350×350	362	362	348	348	0.0729
ND 650×350	362	660	348	646	0.1458
ND 950×350	362	958	348	944	0.2187
ND 1250×350	362	1256	348	1242	0.2916
ND 650×650	660	660	646	646	0.2916
ND 950×650	660	958	646	944	0.4374
ND 1250×650	660	1256	646	1242	0.5832

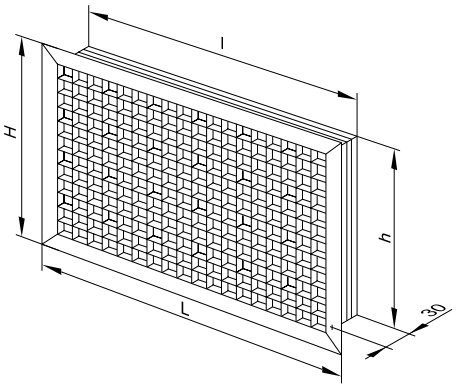

NK-3
series

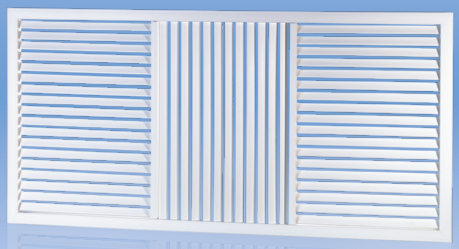

Ventilation combined grille
with unregulated vanes

Application

- Supply and exhaust ventilation, heating and air conditioning networks in industrial, commercial and domestic premises.

Design

- Made of high-quality plastic.
- Weather- and temperature-resistant.
- Removable spring-loaded vanes for simple maintenance.
- Simple and quick mounting.
- Uniform air flow distribution.

Colour modifications





Air flow distribution

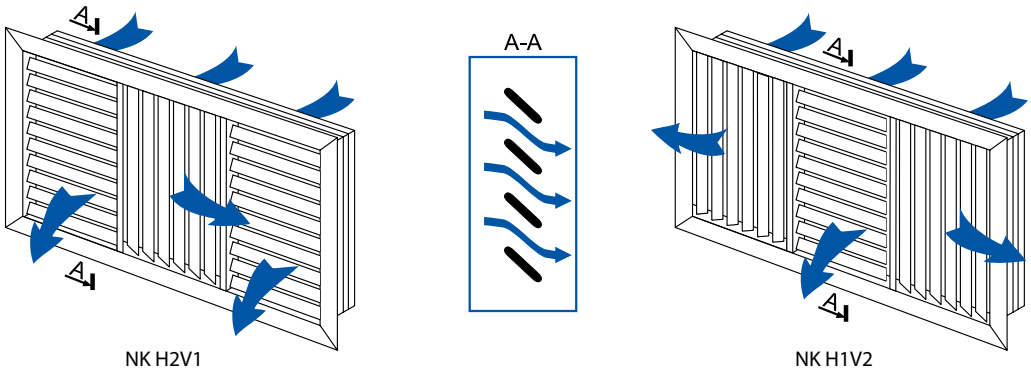

Pressure loss and sound power diagram

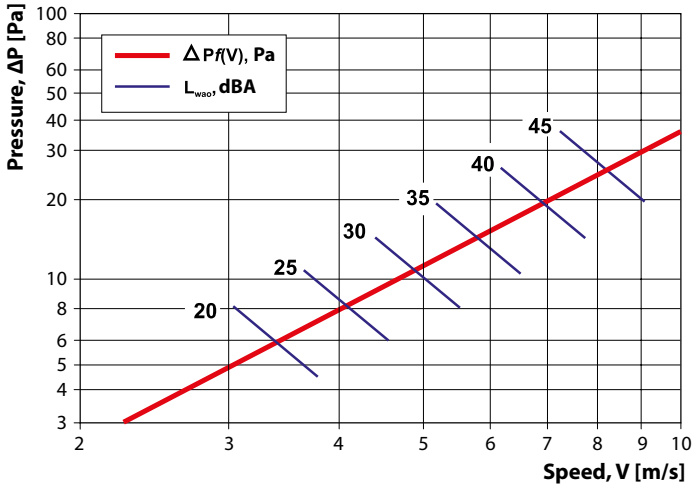

Overall dimensions

Model	Dimensions [mm]				Air pass [m²]
	H	L	h	l	
NVNK H1V1 580×580	598	598	584	584	0.0755

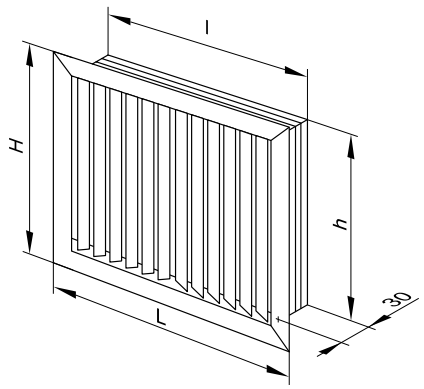

Model	Dimensions [mm]				Air pass [m²]
	H	L	h	l	
NK H2V1 1200×600	602	1214	588	1200	0.1718
NK H2V1 1350×600	602	1364	588	1350	0.1966
NK H2V1 1500×600	602	1514	588	1500	0.2213

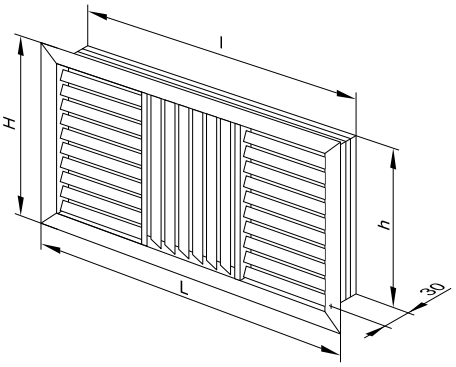

Model	Dimensions [mm]				Air pass [m²]
	H	L	h	l	
NK H1V2 900×300	303	929	289	915	0.0562
NK H1V2 1200×300	303	1214	289	1200	0.9069
NK H1V2 900×400	392	929	378	915	0.0774
NK H1V2 1200×400	392	1214	378	1200	0.1064
NK H1V2 900×600	602	929	588	915	0.1273
NK H1V2 1200×600	602	1214	588	1200	0.1750
NK H1V2 1350×600	602	1364	588	1350	0.2002
NK H1V2 1500×600	602	1514	588	1500	0.2253

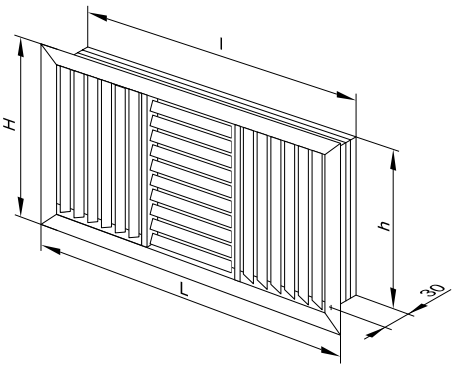

NK-4
series

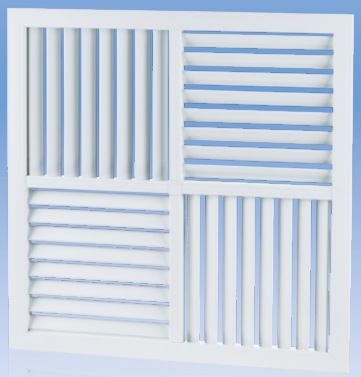

Ventilation combined grille
with unregulated vanes

Application

- Supply and exhaust ventilation, heating and air conditioning networks in industrial, commercial and domestic premises.

Design

- Made of high-quality plastic.
- Weather- and temperature-resistant.
- Removable spring-loaded vanes for simple maintenance.
- Simple and quick mounting.
- Uniform air flow distribution.

Colour modifications

white | brown | grey | beige

UV-resistant | Waterproof | Heat-resistant | Frostproof | Easy mounting | Fire-resistant | Antibacterial | Impact-resistant | Durable | Maintenance-free

Air flow distribution

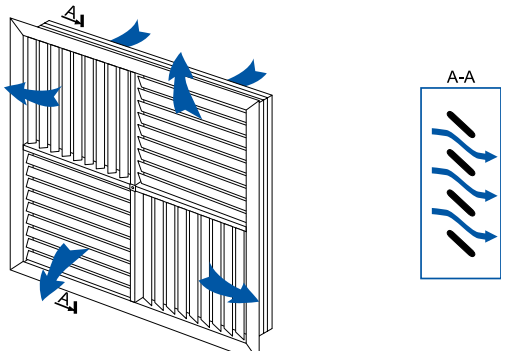

Pressure loss and sound power diagram

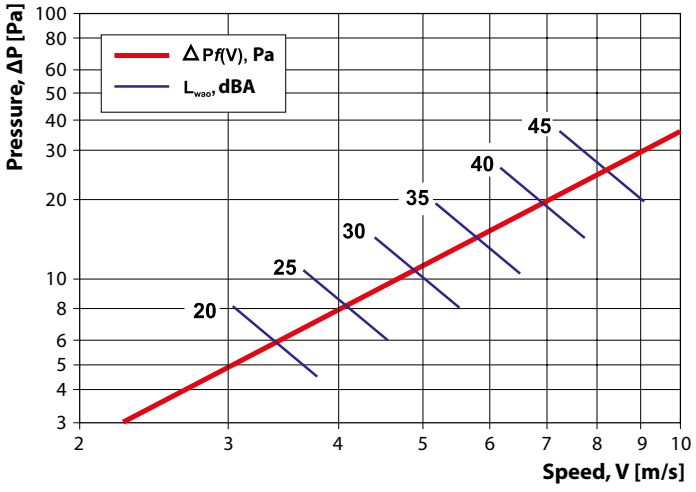

Overall dimensions

Model	Dimensions [mm]				Air pass [m²]
	H	L	h	l	
NK H2V2 550×550	570	570	556	556	0.0422
NK H2V2 600×600	630	630	616	616	0.0577
NK H2V2 900×600	630	930	616	619	0.0982

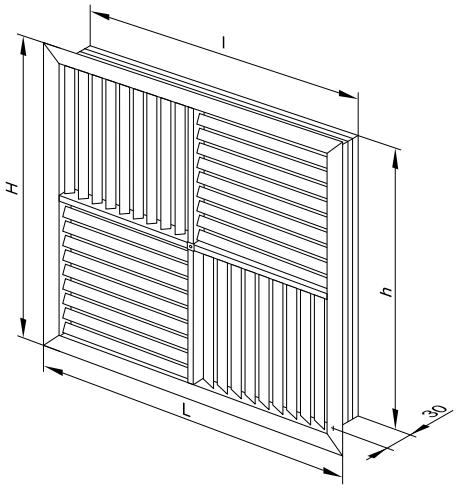

METAL GRILLES FOR HVAC



ONG, ONV – single-row unregulated grilles page 428



ONL – single-row unregulated linear grilles page 430



ONF/ONFS – single-row unregulated grilles page 432



ONK – single-row unregulated sectional grilles page 434



ORG, ORV – single-row regulated grilles page 436



ORG R1/ORV R1 – single-row regulated sectional grilles page 438



ORK – single-row regulated sectional grilles page 442

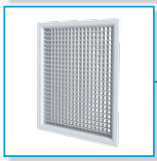

DR – double-row regulated grilles page 444



DP – ceiling diffusers page 446



DPp – ceiling diffusers page 448



DS – slit diffusers page 450



RP – perforated grilles page 452



RN – supply and exhaust ventilation grille page 454



RG – gravity grilles page 456



RGS – gravity grilles page 458



GRM – gravity grilles page 460



DVK – swirl diffusers page 462



DVP – swirl diffusers page 463

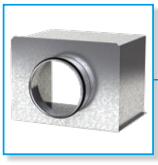

Additional accessories page 464

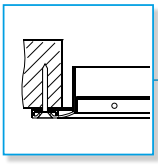

Grille fixation page 472

Series
ONG / ONV



Single-row ventilation grille with fixed vanes

Application

- Supply and exhaust ventilation, heating and air conditioning networks in industrial, commercial and domestic premises.

Design

- Made of high-quality extruded aluminium.
- Polymer or anodized grille coating ensures weather-resistant properties.
- Non-standard sizes may be ordered.

Modifications

- Available modifications with an air flow regulator (R) and an adapter (A) for connection to air ducts.
- Available modifications with versatile fixing (u) or with special springs (p) for fast mounting.

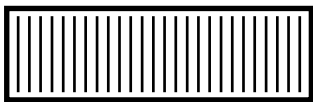

ONV – vertical vane location

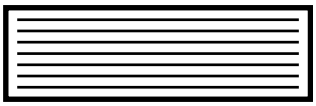

ONG – horizontal vane location

Air flow distribution options

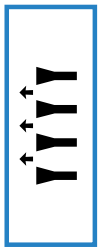

straight (0°)
ONG1, ONV1

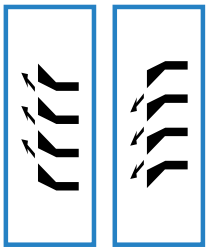

single-sided (15°)
ONG2, ONV2



double-sided (2 x 15°)
ONG3, ONV3

Standard size [mm] and air pass [m²]

Height H [mm]	Length L [mm]						
	100	150	200	250	300	350	400
100	0.004	0.007	0.010	0.012	0.015	0.018	0.021
150	0.007	0.010	0.015	0.018	0.023	0.027	0.031
200	0.010	0.015	0.021	0.026	0.033	0.038	0.045
250	0.012	0.018	0.026	0.032	0.041	0.047	0.055
300	0.015	0.023	0.033	0.041	0.051	0.059	0.069
350	0.017	0.026	0.038	0.047	0.059	0.068	0.080
400	0.020	0.030	0.044	0.054	0.069	0.079	0.093
450	0.023	0.035	0.051	0.062	0.080	0.090	0.107
500	0.026	0.039	0.056	0.070	0.089	0.100	0.119
600	0.031	0.047	0.067	0.084	0.105	0.121	0.142
700	0.036	0.055	0.078	0.094	0.124	0.145	0.170
800	0.042	0.063	0.090	0.112	0.141	0.163	0.190
900	0.048	0.072	0.103	0.129	0.160	0.185	0.228
1000	0.053	0.079	0.113	0.141	0.177	0.204	0.239

Pressure loss and sound power level

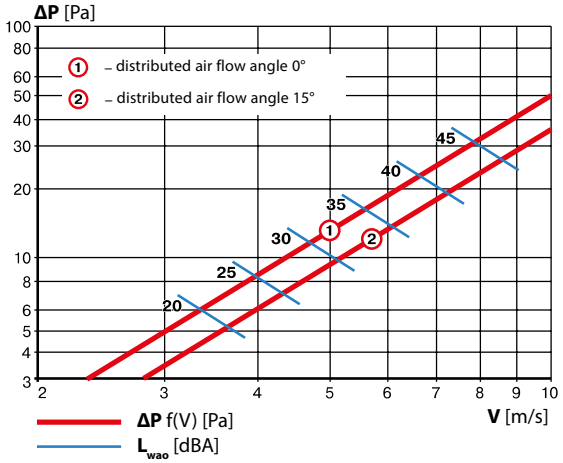

Calculation formula
$L_{WA} = L_{WAO} \times K$

Correction factor K							
S_{ap} [m²]	0.005	0.01	0.02	0.03	0.05	0.07	0.1
K [dBA]	–13	–9	–6	–4.5	–3	–1.5	0

Designation:

ΔP – pressure loss [Pa]

L_{WA} – sound power level [dBA]

L_{WAO} – sound power level for air pass 0.1 m² [dBA]

K – correction factor for sound power level calculation depending on air pass [dBA]

S_{ap} – air pass [m²]

V – rated speed [m/s]

Order code

□□LxH□□□

Grille type:

ONG (ONV) – single-row unregulated grille with horizontal (vertical) vanes

Vane position:

1 – direct (deflection angle 0°)

2 – single-sided (deflection angle 15°)

3 – double-sided (deflection angle 15°)

Grille size:

L – length [mm]

H – height [mm]

Grille coating:

"__" – colour* (white by default)

"Anodized"

Accessories:

__ – no

R – air flow regulator

A – adapter

Grille fixation:

u – versatile

p – spring

*** Standard polymer coating colours:**

white	beige	brown	grey	blue	black
RAL 9016	RAL 1015	RAL 8017	RAL 7001	RAL 5005	RAL 9005

Overall and mounting dimensions

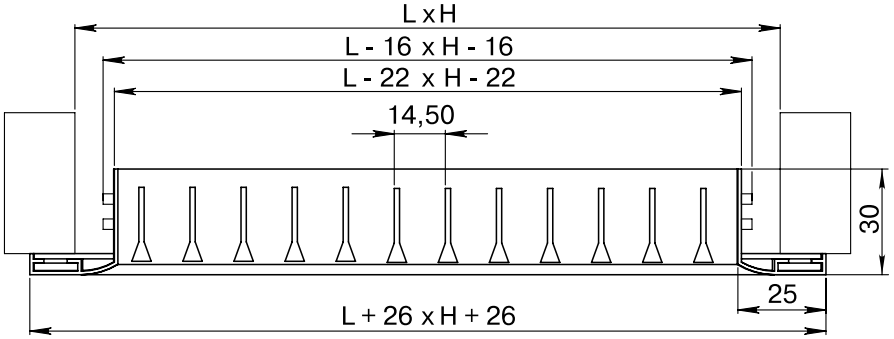

Series
ONL

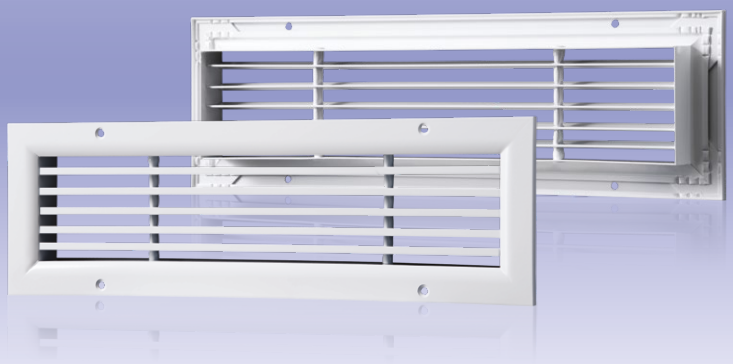

Single-row linear horizontal ventilation grille
with fixed vanes

Application

- Supply and exhaust ventilation, heating and air conditioning networks in industrial, commercial and domestic premises.

Design

- Made of high-quality extruded aluminium.
- Polymer or anodized grille coating ensures weather-resistant properties.
- Non-standard sizes may be ordered.

Modifications

- Available modifications with an air flow regulator (R) and an adapter (A) for connection to air ducts.
- Available modifications with versatile fixing (u) or with special springs (p) for fast mounting.

Air flow distribution options

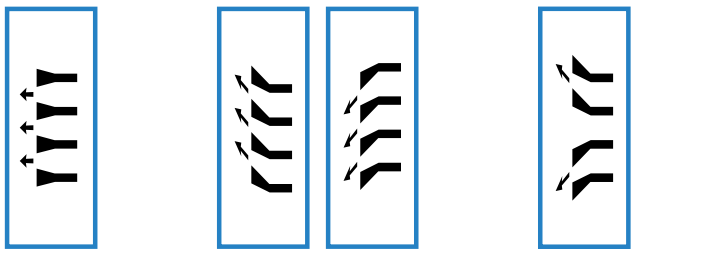

straight (0˚)
ONL1

single-sided (15˚)
ONL2

double-sided (2 x 15˚)
ONL3

Standard size [mm] and air pass [m²]

Height H [mm]	Length L [mm]												
	400	450	500	550	600	650	700	750	800	850	900	950	1000
100	0.003	0.024	0.027	0.030	0.033	0.036	0.039	0.042	0.045	0.048	0.051	0.054	0.057
150	0.004	0.035	0.039	0.043	0.047	0.051	0.055	0.060	0.064	0.068	0.072	0.076	0.080
200	0.007	0.051	0.058	0.064	0.070	0.076	0.081	0.087	0.093	0.099	0.105	0.110	0.115
250	0.008	0.062	0.070	0.077	0.084	0.091	0.098	0.102	0.106	0.110	0.113	0.121	0.128
300	0.009	0.077	0.086	0.091	0.096	0.106	0.115	0.124	0.132	0.141	0.149	0.159	0.168
350	0.009	0.090	0.099	0.105	0.111	0.122	0.132	0.142	0.151	0.161	0.170	0.182	0.193
400	0.105	0.112	0.119	0.126	0.133	0.140	0.147	0.166	0.184	0.196	0.208	0.220	0.232
450	0.119	0.127	0.135	0.142	0.150	0.158	0.166	0.187	0.208	0.222	0.236	0.249	0.263
500	0.133	0.142	0.150	0.159	0.168	0.177	0.186	0.209	0.233	0.248	0.263	0.278	0.294
550	0.147	0.156	0.166	0.175	0.185	0.195	0.205	0.231	0.257	0.274	0.291	0.307	0.324
600	0.161	0.171	0.181	0.192	0.202	0.213	0.224	0.253	0.281	0.300	0.318	0.337	0.355
650	0.175	0.186	0.197	0.208	0.219	0.231	0.243	0.274	0.305	0.325	0.346	0.366	0.386
700	0.188	0.200	0.212	0.224	0.237	0.250	0.263	0.296	0.330	0.351	0.373	0.395	0.417
750	0.202	0.215	0.228	0.241	0.254	0.268	0.282	0.318	0.354	0.377	0.401	0.424	0.447
800	0.215	0.229	0.243	0.257	0.271	0.286	0.301	0.340	0.378	0.403	0.428	0.453	0.478
850	0.229	0.244	0.259	0.273	0.288	0.304	0.320	0.361	0.402	0.429	0.455	0.482	0.509
900	0.243	0.258	0.274	0.290	0.306	0.322	0.339	0.383	0.427	0.455	0.483	0.511	0.539
950	0.256	0.273	0.290	0.306	0.323	0.340	0.358	0.404	0.451	0.480	0.510	0.540	0.570
1000	0.270	0.288	0.305	0.323	0.340	0.359	0.377	0.426	0.475	0.506	0.537	0.569	0.600

Pressure loss and sound power level

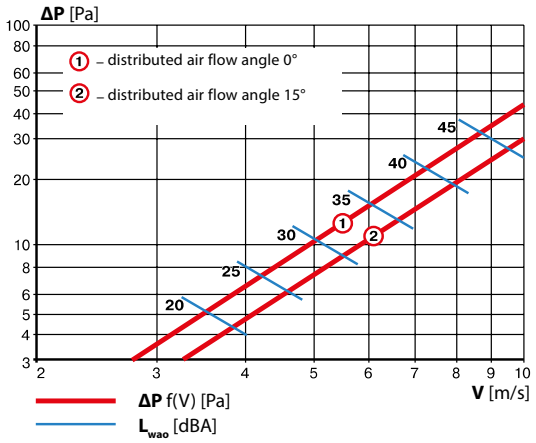

Calculation formula
$L_{WA} = L_{WAO} \times K$

Correction factor K						
S_{ap} [m²]	0.01	0.02	0.05	0.1	0.2	0.4
K [dBA]	–9	–6	–3	0	+3	+6

Designation:

ΔP – pressure loss [Pa]

L_{WA} – sound power level [dBA]

L_{WAO} – sound power level for air pass 0.1 m² [dBA]

K – correction factor for sound power level calculation depending on air pass [dBA]

S_{ap} – air pass [m²]

V – rated speed [m/s]

Order code

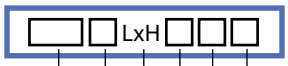

Grille type:

ONL – single-row linear ventilation grille with fixed vanes

Vane position:

1 – direct (deflection angle 0°)

2 – single-sided (deflection angle 15°)

3 – double-sided (deflection angle 15°)

Grille size:

L – length [mm]

H – height [mm]

Grille coating:

"___" – colour* (white by default)

"Anodized"

Accessories:

___– no

R – air flow regulator

A – adapter

Grille fixation:

u – versatile

p – spring

*** Standard polymer coating colours:**

white	beige	brown	grey	blue	black
RAL 9016	RAL 1015	RAL 8017	RAL 7001	RAL 5005	RAL 9005

Overall and mounting dimensions

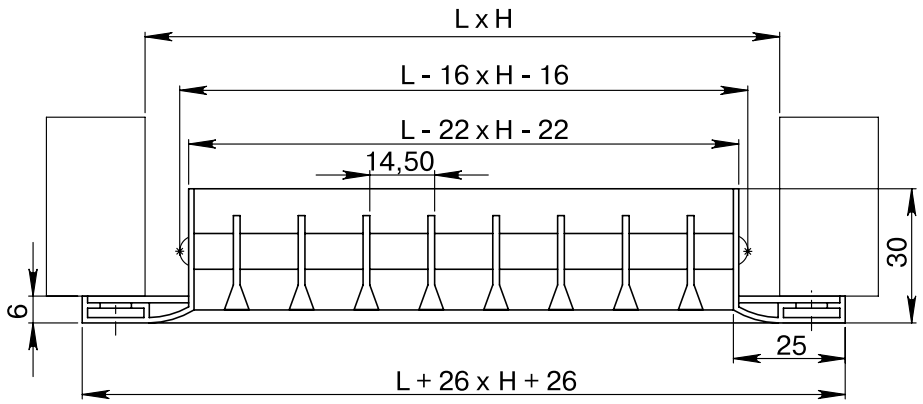

Series
ONF/ONFS

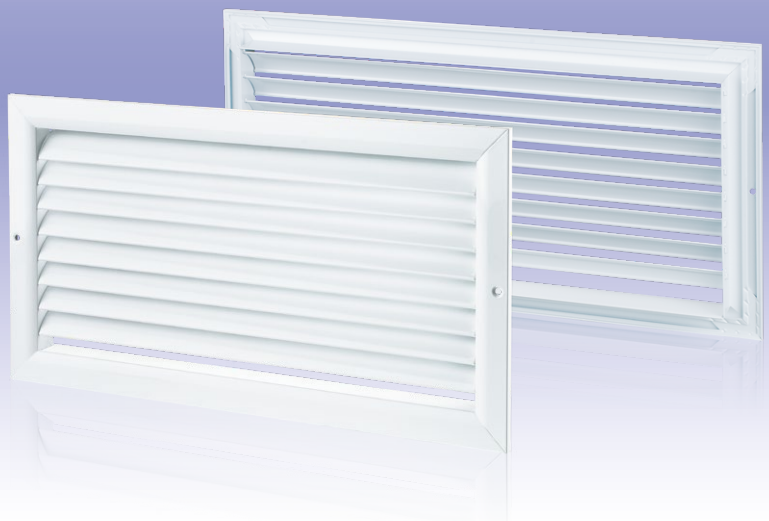

Single-row horizontal ventilation grille with fixed vanes

Application

- Supply and exhaust ventilation, heating and air conditioning networks in industrial, commercial and domestic premises.

Design

- Made of high-quality extruded aluminium.
- Polymer or anodized grille coating ensures weather-resistant properties.
- Non-standard sizes may be ordered.
- Grilles above 450 mm are equipped with a partition for extra rigidity (ONFS series).

Modifications

- Available modifications with an adapter (A) for connection to air ducts.
- Available modifications with special springs (p) for fast mounting.

Air flow distribution

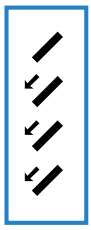

vane deflection angle – 45˚

Standard size [mm] and air pass [m²]

Height H [mm]	Length L [mm]													
	100	150	200	250	300	350	400	450	500	600	700	800	900	1000
100	0.004	0.007	0.010	0.012	0.015	0.018	0.021	0.024	0.027	0.033	0.039	0.045	0.051	0.057
150	0.007	0.010	0.015	0.018	0.023	0.027	0.031	0.035	0.039	0.047	0.055	0.064	0.072	0.080
200	0.010	0.015	0.021	0.026	0.033	0.038	0.045	0.051	0.058	0.070	0.081	0.093	0.105	0.115
250	0.012	0.018	0.026	0.032	0.041	0.047	0.055	0.062	0.070	0.084	0.098	0.106	0.113	0.128
300	0.015	0.023	0.033	0.041	0.051	0.059	0.069	0.077	0.086	0.096	0.115	0.132	0.149	0.168
350	0.017	0.026	0.038	0.047	0.059	0.068	0.080	0.090	0.099	0.111	0.132	0.151	0.170	0.193
400	0.020	0.030	0.044	0.054	0.069	0.079	0.093	0.103	0.117	0.142	0.166	0.189	0.212	0.237
450	0.023	0.035	0.051	0.062	0.080	0.090	0.107	0.117	0.131	0.160	0.186	0.214	0.239	0.265
500	0.026	0.039	0.056	0.070	0.089	0.100	0.119	0.130	0.145	0.178	0.206	0.238	0.265	0.293
600	0.031	0.047	0.067	0.084	0.105	0.121	0.142	0.158	0.173	0.214	0.246	0.287	0.318	0.349
700	0.036	0.055	0.078	0.094	0.124	0.145	0.170	0.184	0.203	0.251	0.288	0.336	0.372	0.408
800	0.042	0.063	0.090	0.112	0.141	0.163	0.190	0.211	0.232	0.288	0.330	0.385	0.426	0.467
900	0.048	0.072	0.103	0.129	0.160	0.185	0.228	0.238	0.262	0.325	0.372	0.435	0.481	0.527
1000	0.053	0.079	0.113	0.141	0.177	0.204	0.239	0.266	0.292	0.361	0.414	0.484	0.536	0.587

Pressure loss and sound power level

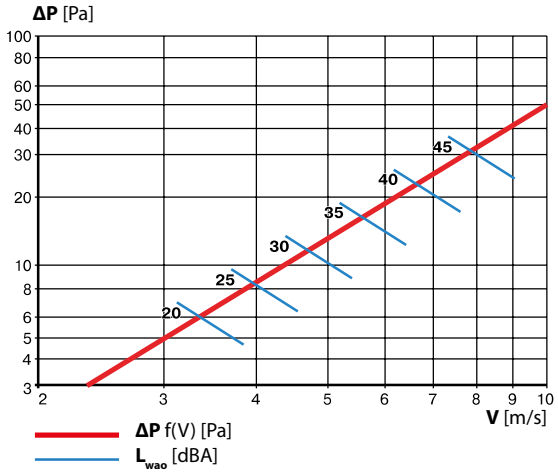

Calculation formula
$L_{WA} = L_{WAO} \times K$

Correction factor K							
S_{ap} [m²]	0.005	0.01	0.02	0.03	0.05	0.07	1
K [dBA]	–13	–9	–6	–4.5	–3	–1.5	0

Designation:

ΔP – pressure loss [Pa]

L_{WA} – sound power level [dBA]

L_{WAO} – sound power level for air pass 0.1 m² [dBA]

K – correction factor for sound power level calculation depending on air pass [dBA]

S_{ap} – air pass [m²]

V – rated speed [m/s]

Order code

LxH □□□

Grille coating:

"__" – colour* (white by default)

"Anodized"

Grille type:

ONF / ONFS – single-row unregulated grille with horizontal (vertical) vanes fixed at 45°

Accessories:

__ – no

A – adapter

Grille size:

L – length [mm]

H – height [mm]

Grille fixation:

p – spring

*** Standard polymer coating colours:**

white	beige	brown	grey	blue	black
RAL 9016	RAL 1015	RAL 8017	RAL 7001	RAL 5005	RAL 9005

Overall and mounting dimensions

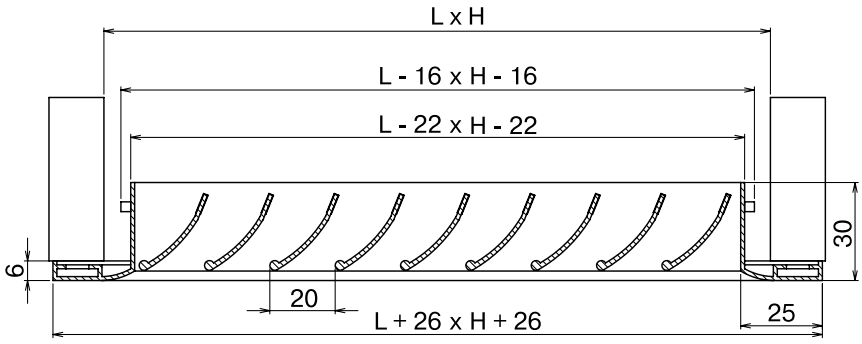

Series
ONK



Single-row sectional ventilation grille with fixed vanes

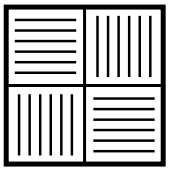

ONK2 – pair-wise and perpendicular vane position

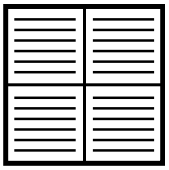

ONK1, ONK3 – horizontal vane position

Application

- Supply and exhaust ventilation, heating and air conditioning networks in industrial, commercial and domestic premises.

Design

- Made of high-quality extruded aluminium.
- Equipped with a central cross-type partition for extra rigidity.
- Polymer or anodized grille coating ensures weather-resistant properties.
- Non-standard sizes may be ordered.

Modifications

- Available modifications with an air flow regulator (R) and an adapter (A) for connection to air ducts.
- Available modifications with versatile fixing (u) for fast mounting.

Air flow distribution options

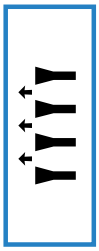

straight (0˚)
ONK1, ONK2

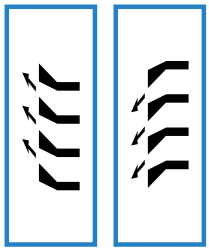

single–sided (15˚)
ONK3

Standard size [mm] and air pass [m²]

Height H [mm]	Length L [mm]											
	450	500	550	600	650	700	750	800	850	900	950	1000
450	0.117	0.131	0.146	0.160	0.173	0.186	0.200	0.214	0.226	0.239	0.252	0.265
500	0.130	0.145	0.162	0.178	0.192	0.206	0.222	0.238	0.252	0.265	0.279	0.293
550	0.144	0.159	0.178	0.196	0.211	0.226	0.244	0.263	0.277	0.292	0.306	0.321
600	0.158	0.173	0.194	0.214	0.230	0.246	0.267	0.287	0.303	0.318	0.334	0.349
650	0.171	0.188	0.210	0.233	0.250	0.267	0.289	0.312	0.328	0.345	0.362	0.379
700	0.184	0.203	0.227	0.251	0.270	0.288	0.312	0.336	0.354	0.372	0.390	0.408
750	0.198	0.217	0.243	0.270	0.289	0.309	0.335	0.361	0.380	0.399	0.418	0.438
800	0.211	0.232	0.260	0.288	0.309	0.330	0.358	0.385	0.406	0.426	0.447	0.467
850	0.225	0.247	0.277	0.306	0.329	0.351	0.380	0.410	0.432	0.453	0.475	0.497
900	0.238	0.262	0.293	0.325	0.348	0.372	0.403	0.435	0.458	0.481	0.504	0.527
950	0.252	0.277	0.310	0.343	0.368	0.393	0.426	0.459	0.484	0.508	0.533	0.557
1000	0.266	0.292	0.327	0.361	0.388	0.414	0.449	0.484	0.510	0.536	0.561	0.587

Pressure loss and sound power level

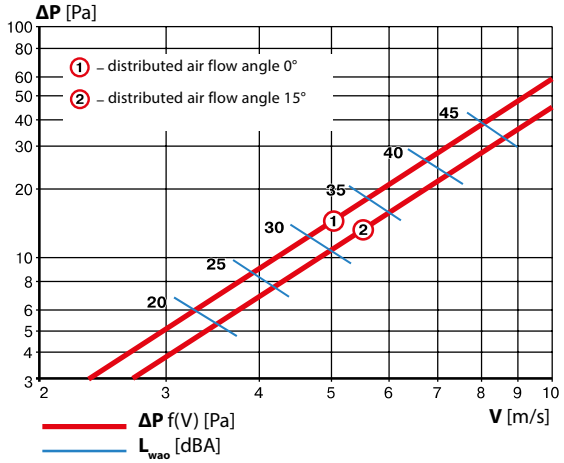

Calculation formula
$L_{WA} = L_{WAO} \times K$

Correction factor K					
S_{ap} [m²]	0.01	0.15	0.2	0.3	0.4
K [dBA]	0	+1.5	+3	+4.5	+6

Designation:

ΔP – pressure loss [Pa]

L_{WA} – sound power level [dBA]

L_{WAO} – sound power level for air pass 0.1 m² [dBA]

K – correction factor for sound power level calculation depending on air pass [dBA]

S_{ap} – air pass [m²]

V – rated speed [m/s]

Order code

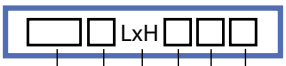

Grille coating:

"__" – colour* (white by default)

"Anodized"

Grille type:

ONK – single-row sectional grille with fixed vanes

Vane position:

1 – direct (deflection angle 0°)

2 – single-sided (deflection angle 15°)

3 – double-sided (deflection angle 15°)

Accessories:

__ – no

R – air flow regulator

A – adapter

Grille size:

L – length [mm]

H – height [mm]

Grille fixation:

u – versatile

*** Standard polymer coating colours:**

white	beige	brown	grey	blue	black
RAL 9016	RAL 1015	RAL 8017	RAL 7001	RAL 5005	RAL 9005

Overall and mounting dimensions

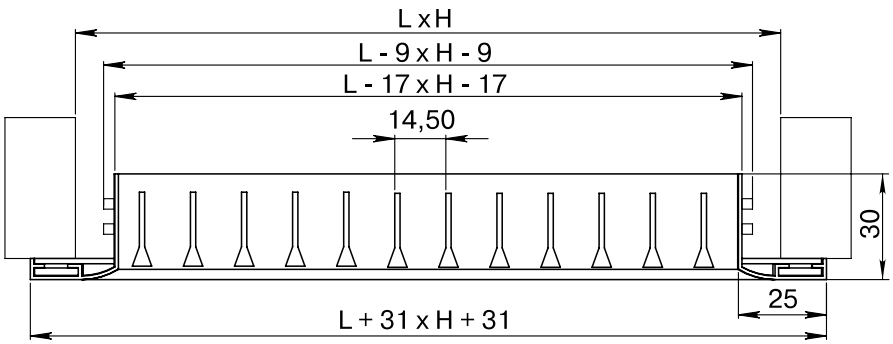

Series
ORG / ORV

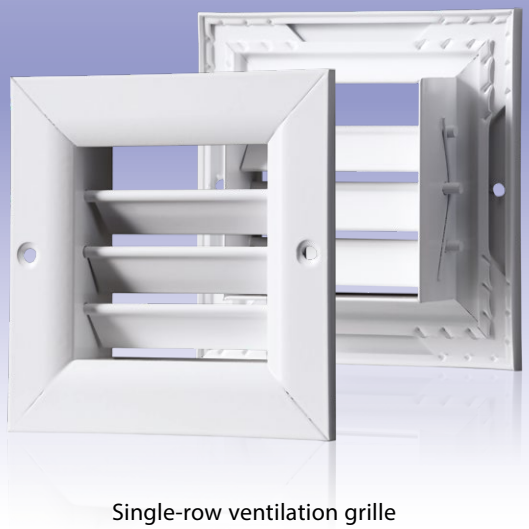

Single-row ventilation grille
with adjustable louvres

Application

- Supply and exhaust ventilation, heating and air conditioning networks in industrial, commercial and domestic premises.

Design

- Made of high-quality extruded aluminium.
- Polymer or anodized grille coating ensures weather-resistant properties.
- Non-standard sizes may be ordered.

Modifications

- Available modifications with an air flow regulator (R) and an adapter (A) for connection to air ducts.
- Available modifications with versatile fixing (u) or with special springs (p) for fast mounting.

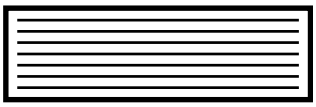

ORG – horizontal position
of louvres

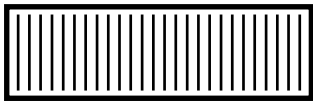

ORV – vertical position
of louvres

Standard size [mm] and air pass [m²]

Height H [mm]	Length L [mm]						
	100	150	200	250	300	350	400
100	0.002	0.008	0.014	0.018	0.023	0.027	0.033
150	0.005	0.011	0.017	0.021	0.026	0.030	0.036
200	0.008	0.018	0.025	0.031	0.040	0.045	0.054
250	0.010	0.021	0.032	0.038	0.048	0.055	0.066
300	0.013	0.027	0.041	0.051	0.062	0.071	0.084
350	0.016	0.031	0.046	0.057	0.073	0.081	0.096
400	0.019	0.037	0.055	0.068	0.087	0.100	0.114
450	0.022	0.042	0.062	0.077	0.098	0.112	0.132
500	0.024	0.047	0.069	0.085	0.109	0.125	0.144
600	0.029	0.056	0.083	0.102	0.131	0.149	0.175
700	0.034	0.066	0.098	0.120	0.154	0.175	0.205
800	0.038	0.075	0.112	0.138	0.177	0.201	0.235
900	0.043	0.085	0.127	0.156	0.20	0.227	0.266
1000	0.047	0.094	0.141	0.173	0.22	0.253	0.296

Pressure loss and sound power level

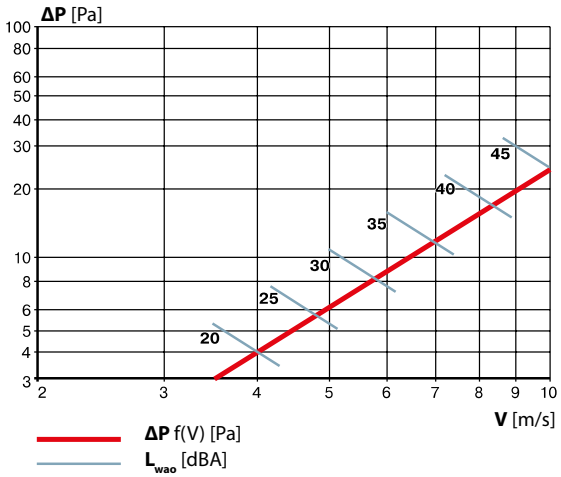

Calculation formula
$\Delta P_p = \Delta P \times K_p$

Correction factor K_p			
	0°	22°	45°
K_p	1	1.25	1.5

Calculation formula
$L_{WA} = L_{WAO} \times K$

Correction factor K						
S_{ap} [m²]	0.01	0.02	0.05	0.1	0.2	0.4
K [dBA]	–9	–6	–3	0	+3	+6

Designation:

ΔP_p – pressure loss at various vane positions [Pa]

ΔP – pressure loss [Pa]

K_p – correction factor for pressure loss calculation depending on louvre deflection angle

L_{WA} – sound power level [dBA]

L_{WAO} – sound power level for air pass 0.1 m² [dBA]

K – correction factor for sound power level calculation depending on air pass [dBA]

S_{ap} – air pass [m²]

V – rated speed [m/s]

Order code

LxH □□□

Grille type:

ORG – single-row grille with individually adjustable horizontal louvres

ORV – single-row grille with individually adjustable vertical louvres

Grille size:

L – length [mm]

H – height [mm]

Grille coating:

"__" – colour* (white by default)

"Anodized"

Accessories:

__ – no

R – air flow regulator

A – adapter

Grille fixation:

u – versatile

p – spring

*** Standard polymer coating colours:**

white	beige	brown	grey	blue	black
RAL 9016	RAL 1015	RAL 8017	RAL 7001	RAL 5005	RAL 9005

Overall and mounting dimensions

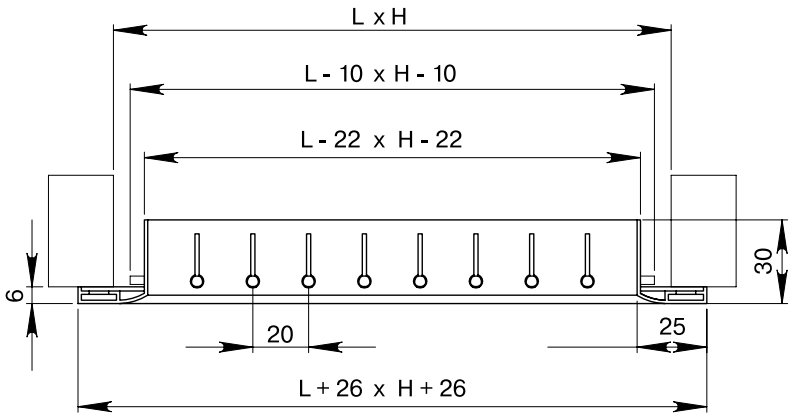

Series
ORG R1/ORV R1



Single-row ventilation grille with first row adjustable louvres and a built-in air flow regulator

Application

- For supply and exhaust ventilation, heating and air conditioning systems in industrial, commercial and domestic premises.

Features

- Reduced thickness compared to single-row grilles with optional air flow control.
- Possibility to adjust the air flow from the indoor side using a special foot.

Design

- Made of high quality extruded aluminium profile.
- The polymer or anodized coating of the grille provides resistance to adverse weather conditions.
- Grilles with special dimensions can be manufactured upon request.
- Grilles with movable front louvres for adjustment of the supply jet geometry and an integrated air volume regulator (second row of louvres) for changing the air quantity.

Modifications

- Can be equipped with an adapter (A) (see the end of the section).
- Can be equipped with special springs (p) for quick installation (see the end of the section).

ORG R1. Standard series and cross-sectional area [m²]

Height H [mm]	Length L [mm]													
	100	150	200	250	300	350	400	450	500	600	700	800	900	1000
100	0.005	0.007	0.012	0.014	0.018	0.021	0.025	0.027	0.029	0.036	0.043	0.050	0.057	0.064
150	0.008	0.011	0.019	0.022	0.029	0.033	0.040	0.043	0.047	0.057	0.068	0.079	0.090	0.101
200	0.011	0.016	0.026	0.031	0.041	0.046	0.056	0.061	0.066	0.080	0.096	0.111	0.126	0.142
250	0.014	0.020	0.033	0.039	0.052	0.059	0.071	0.078	0.084	0.101	0.121	0.140	0.159	0.179
300	0.017	0.025	0.041	0.049	0.064	0.072	0.088	0.096	0.103	0.124	0.148	0.172	0.196	0.219
350	0.021	0.030	0.049	0.058	0.076	0.086	0.104	0.113	0.123	0.145	0.173	0.201	0.229	0.256
400	0.024	0.035	0.056	0.067	0.088	0.099	0.121	0.131	0.142	0.169	0.201	0.233	0.265	0.297
450	0.027	0.039	0.063	0.075	0.099	0.112	0.136	0.148	0.160	0.189	0.226	0.262	0.298	0.334
500	0.031	0.044	0.071	0.085	0.112	0.125	0.152	0.166	0.179	0.213	0.253	0.294	0.334	0.375
600	0.036	0.052	0.085	0.101	0.133	0.149	0.181	0.197	0.213	0.193	0.231	0.268	0.305	0.342
700	0.042	0.061	0.099	0.117	0.155	0.173	0.211	0.230	0.248	0.221	0.264	0.307	0.350	0.392
800	0.049	0.071	0.114	0.136	0.179	0.201	0.244	0.266	0.287	0.259	0.309	0.358	0.408	0.458
900	0.055	0.079	0.128	0.152	0.201	0.225	0.274	0.298	0.323	0.287	0.342	0.397	0.453	0.508
1000	0.062	0.089	0.143	0.171	0.225	0.253	0.307	0.334	0.362	0.324	0.386	0.449	0.511	0.574

ORV R1. Standard series and cross-sectional area [m²]

Height H [mm]	Length L [mm]													
	100	150	200	250	300	350	400	450	500	600	700	800	900	1000
100	0.005	0.008	0.011	0.014	0.017	0.020	0.023	0.026	0.030	0.036	0.042	0.049	0.055	0.062
150	0.007	0.011	0.016	0.020	0.025	0.029	0.034	0.038	0.043	0.052	0.061	0.071	0.079	0.089
200	0.001	0.019	0.026	0.033	0.041	0.048	0.055	0.062	0.070	0.085	0.099	0.114	0.128	0.143
250	0.014	0.022	0.031	0.039	0.049	0.057	0.066	0.074	0.083	0.101	0.117	0.136	0.152	0.171
300	0.018	0.029	0.041	0.052	0.064	0.075	0.087	0.098	0.110	0.133	0.155	0.179	0.201	0.225
350	0.021	0.033	0.046	0.059	0.072	0.084	0.098	0.110	0.124	0.149	0.173	0.201	0.225	0.253
400	0.025	0.040	0.056	0.071	0.088	0.103	0.119	0.134	0.150	0.181	0.211	0.244	0.274	0.307
450	0.027	0.043	0.061	0.078	0.096	0.112	0.130	0.146	0.164	0.197	0.230	0.266	0.298	0.334
500	0.029	0.047	0.066	0.084	0.103	0.121	0.140	0.158	0.177	0.213	0.248	0.287	0.323	0.362
600	0.036	0.057	0.080	0.101	0.124	0.145	0.169	0.189	0.213	0.193	0.221	0.259	0.287	0.324
700	0.043	0.068	0.096	0.121	0.148	0.173	0.201	0.226	0.253	0.231	0.264	0.309	0.342	0.386
800	0.050	0.079	0.111	0.140	0.172	0.201	0.233	0.262	0.294	0.268	0.307	0.358	0.397	0.449
900	0.057	0.090	0.126	0.159	0.196	0.229	0.265	0.298	0.334	0.305	0.350	0.408	0.453	0.511
1000	0.064	0.101	0.142	0.179	0.219	0.256	0.297	0.334	0.375	0.342	0.392	0.458	0.508	0.574

ORG R1. Weight [kg]

Height H [mm]	Length L [mm]													
	100	150	200	250	300	350	400	450	500	600	700	800	900	1000
100	0.19	0.23	0.32	0.37	0.46	0.50	0.60	0.64	0.69	0.85	0.99	1.13	1.27	1.41
150	0.25	0.31	0.44	0.51	0.64	0.70	0.83	0.90	0.96	1.2	1.39	1.59	1.78	1.98
200	0.31	0.39	0.55	0.63	0.79	0.87	1.03	1.11	1.19	1.49	1.73	1.97	2.21	2.45
250	0.38	0.47	0.67	0.77	0.98	1.07	1.26	1.36	1.46	1.84	2.13	2.43	2.73	3.02
300	0.44	0.55	0.77	0.89	1.12	1.23	1.46	1.57	1.69	2.13	2.47	2.82	3.16	3.5
350	0.50	0.63	0.90	1.03	1.30	1.43	1.70	1.83	1.96	2.47	2.87	3.27	3.67	4.07
400	0.56	0.70	1.00	1.15	1.45	1.60	1.89	2.04	2.19	2.77	3.21	3.65	4.09	4.53
450	0.63	0.79	1.12	1.29	1.63	1.79	2.13	2.29	2.46	3.11	3.61	4.11	4.60	5.1
500	0.68	0.88	1.23	1.41	1.78	1.96	2.32	2.51	2.69	3.4	3.94	4.49	5.03	5.58
600	0.84	1.06	1.52	1.75	2.20	2.43	2.89	3.12	3.35	4.16	4.94	5.63	6.31	7
700	0.97	1.23	1.77	2.03	2.56	2.83	3.36	3.63	3.89	4.94	5.74	6.54	7.34	8.14
800	1.09	1.38	1.97	2.27	2.86	3.16	3.76	4.05	4.35	5.53	6.42	7.31	8.20	9.1
900	1.22	1.55	2.22	2.55	3.22	3.55	4.22	4.56	4.89	6.22	7.22	8.23	9.23	10.24
1000	1.34	1.69	2.43	2.79	3.52	3.89	4.62	4.98	5.35	6.8	7.90	9.00	10.09	11.19

OPB P1. Weight [kg]

Height H [mm]	Length L [mm]													
	100	150	200	250	300	350	400	450	500	600	700	800	900	1000
100	0.19	0.25	0.31	0.38	0.44	0.50	0.56	0.63	0.68	0.84	0.97	1.09	1.22	1.34
150	0.23	0.31	0.39	0.47	0.55	0.63	0.70	0.79	0.86	1.06	1.23	1.38	1.55	1.69
200	0.32	0.44	0.55	0.67	0.77	0.90	1.00	1.12	1.23	1.52	1.77	1.97	2.22	2.43
250	0.37	0.51	0.63	0.77	0.89	1.03	1.15	1.29	1.41	1.72	2.03	2.27	2.55	2.79
300	0.46	0.64	0.79	0.97	1.12	1.30	1.45	1.63	1.78	2.2	2.56	2.86	3.22	3.52
350	0.50	0.70	0.87	1.07	1.23	1.43	1.60	1.79	1.96	2.43	2.83	3.16	3.55	3.89
400	0.60	0.83	1.03	1.26	1.46	1.70	1.89	2.13	2.32	2.89	3.36	3.76	4.22	4.62
450	0.64	0.90	1.10	1.36	1.57	1.83	2.04	2.29	2.51	3.12	3.63	4.05	4.56	4.98
500	0.69	0.96	1.19	1.46	1.69	1.96	2.19	2.46	2.69	3.35	3.89	4.35	4.89	5.35
600	0.85	1.20	1.49	1.84	2.13	2.47	2.77	3.11	3.40	4.21	4.94	5.53	6.22	6.8
700	0.99	1.39	1.73	2.13	2.47	2.87	3.21	3.61	3.94	4.94	5.74	6.42	7.22	7.91
800	1.13	1.59	1.97	2.43	2.82	3.27	3.65	4.11	4.49	5.63	6.54	7.31	8.23	9
900	1.27	1.78	2.21	2.73	3.16	3.67	4.09	4.60	5.03	6.31	7.34	8.20	9.23	10.09
1000	1.41	1.98	2.45	3.02	3.50	4.07	4.53	5.10	5.58	7	8.14	9.10	10.24	11.19

Technical data

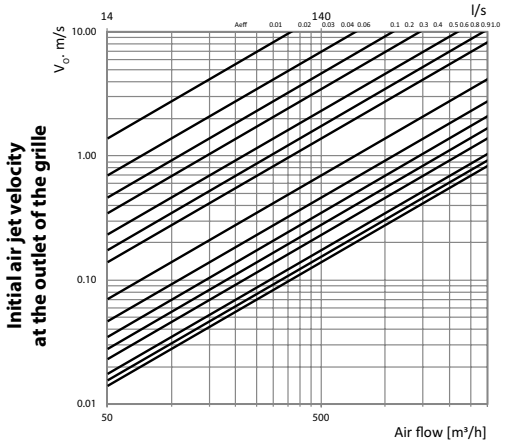

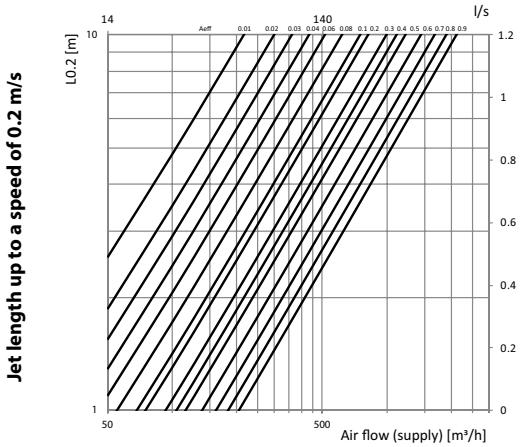

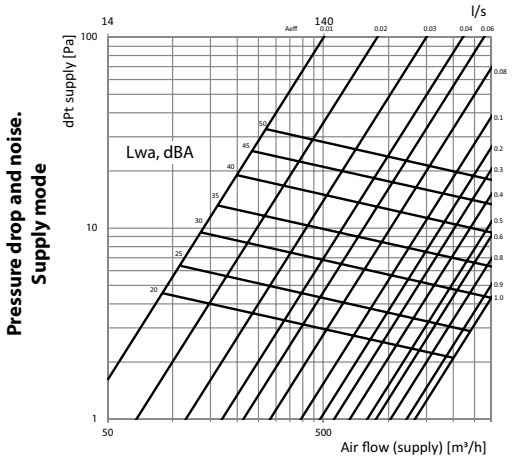

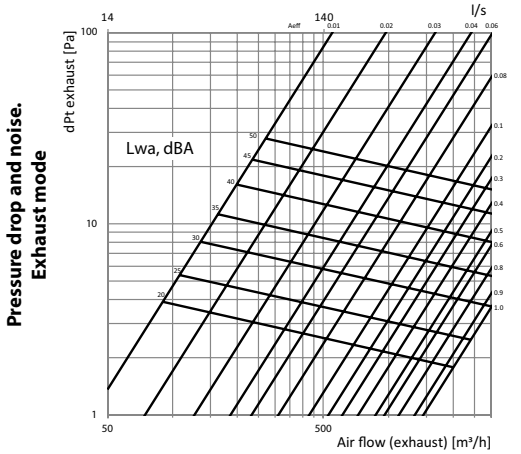

The following factors are used to calculate the noise performance

Sound power correction factor depending on octaves

Aeff		Octave frequency band [Hz]							
		63	125	250	500	1000	2000	4000	8000
0,01	Kok supply [dB]	6	3	0	-1	-5	-12	-11	-7
	Kok exhaust [dB]	4	2	0	-2	-3	-11	-12	-6
0,1	Kok supply [dB]	6	4	0	-2	-6	-12	-11	-8
	Kok exhaust [dB]	4	3	-1	-2	-3	-11	-13	-8
0,5	Kok supply [dB]	7	4	-1	-3	-7	-12	-13	-9
	Kok exhaust [dB]	4	4	0	-3	-4	-15	-14	-7
1	Kok supply [dB]	7	5	0	-3	-8	-14	-13	-9
	Kok exhaust [dB]	5	4	1	-2	-9	-16	-15	-8

Sound power level in octaves is calculated as:

$$L_{waok} = L_{wa} + K_{ok}$$

Correction factors for calculating the pressure drop and sound power level depending on the position of the grille louvres

Depending on the position of the plates of the second row, the values of the pressure drop and sound power change and must be corrected using correction factors.

Second row closure		0%	25%	50%	75%
Supply	Kp	1	2.6	11.3	24.3
	Kf	+0	+15	+20	+27
Exhaust	Kp	1	2.4	11	23.5
	Kf	+0	+14	+20	+25

Pressure drop correction

dPt' = dPt x Kp

Sound power level correction

Lwa' = Lwa x Kf

Geometric parameters of the air jet

The nature and geometry of the jet varies depending on the height of the grille and the angle of its louvres.

	Without Coanda effect			With Coanda effect		
	h>300			h<300		
Discharge angle (front row of plates)	0°	44°	90°	0°	44°	90°
KL0.2	1	0.84	0.57	1.37	0.97	0.71
Lb	0.61	0.6	0.39	0.75	0.75	0.51
bv	0.14	0.087	0.077	0.13	0.08	0.068
bh	0.45	0.49	0.58	0.47	0.51	0.63

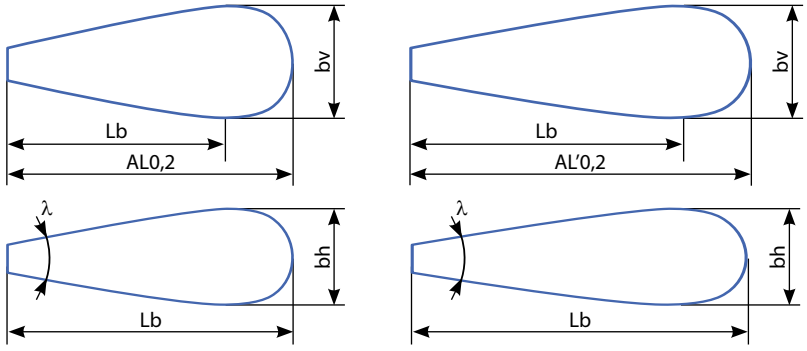

L'0,2 = L0,2 x KL0,2
Lb = L0,2 x KLb
bv = L0,2 x Kbv
bh = L0,2 x Kbh

Velocities at different jet distances

In addition to the given length L0.2, where the velocity is 0.2 m/s, the jet lengths with corresponding velocities at the end can also be calculated.

X	0.2	0.25	0.3	0.4	0.5
Kx	1	0.81	0.68	0.52	0.42

Lx = L0.2 x Kx

The data applies to horizontally adjusted first and second row louvres (x0) and a grille positioned 800 mm from the ceiling (without Coanda effect).

Designation key

l0.2 - air jet length.

Defined as the maximum distance from the outlet of the jet from the diffuser to the point at which the air flow velocity is 0.2 m/s.

Lb – distance to maximum jet expansion [m].

bv – maximum vertical jet expansion [m].

bh – maximum horizontal jet expansion.

V0 – initial air jet velocity at the outlet of the diffuser [m/s].

Vx – velocity on the jet axis at a distance x from the diffuser [m/s].

x – distance from the diffuser [m].

dPt – total pressure drop [Pa].

LWA – weighted average sound power level by filter A [dBA].

LWAok – octave sound power level [dB].

Kok – octave sound power correction factor [dB].

dt – temperature difference between supply and room air [°C].

Kl0.2 – coefficient of jet length variation.

Kbv – vertical jet expansion coefficient.

Kbh – horizontal jet expansion coefficient.

Kp – correction factor for recalculating the total pressure drop.

Kf – correction factor for recalculating sound power level.

Ordering scheme

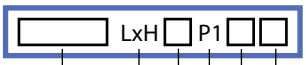

Grille type:

ORG – single-row grille with individually adjustable horizontal louvres

ORV – single-row grille with individually adjustable vertical louvres

Opening dimensions:

L – length [mm]

H – height [mm]

Grille coating:

_____ colour* (white by default)

An – anodized

Accessories:

A – adapter

R1 – built-in air flow regulator

Grille fastening:

p – springs

*** Standard polymer coating colours:**



white RAL 9016 | beige RAL 1015 | brown RAL 8017 | grey RAL 7001 | blue RAL 5005 | black RAL 9005

Overall and mounting dimensions

Dimensions [mm]			
L	k	k1	k2
100	37	20.8	8.8
150	22	35.8	23.8
200	42	15.8	3.8
250	27	30.8	18.8
300	47	10.8	-1.2
350	32	25.8	13.8
400	52	5.8	-6.2
450	37	20.8	8.8
500	22	35.8	23.8

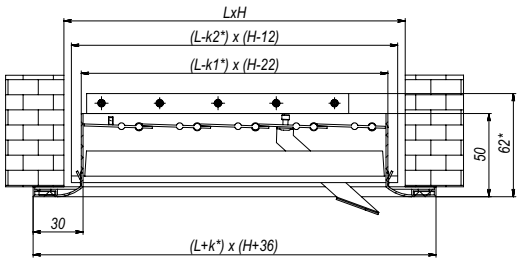

ORG R1

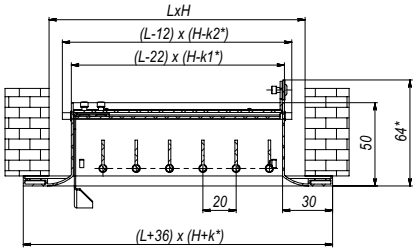

ORV R1

Series
ORK



Single-row sectional ventilation grille with adjustable louvres

Application

- Supply and exhaust ventilation, heating and air conditioning networks in industrial, commercial and domestic premises.

Design

- Made of high-quality extruded aluminium.
- Air flow direction control.
- Cross-flow partition provides extra rigidity.
- Polymer or anodized grille coating ensures weather-resistant properties.
- Non-standard sizes may be ordered.

Modifications

- Available modifications with an air flow regulator (R) and an adapter (A) for connection to air ducts.
- Available modifications with versatile fixing (u) for fast mounting.

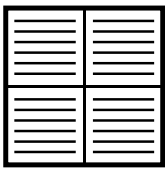

ORK1 – parallel louvre position

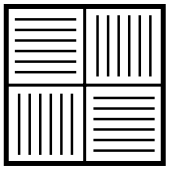

ORK2 – pairwise perpendicular louvre position

Standard size [mm] and air pass [m²]

Height H [mm]	Length L [mm]											
	450	500	550	600	650	700	750	800	850	900	950	1000
450	0.148	0.171	0.182	0.194	0.212	0.230	0.250	0.269	0.284	0.298	0.313	0.327
500	0.166	0.187	0.197	0.208	0.232	0.257	0.279	0.301	0.317	0.333	0.349	0.365
550	0.183	0.203	0.213	0.223	0.253	0.283	0.308	0.332	0.350	0.367	0.385	0.403
600	0.2	0.219	0.228	0.237	0.274	0.31	0.337	0.363	0.383	0.402	0.422	0.441
650	0.217	0.244	0.257	0.270	0.303	0.337	0.366	0.395	0.414	0.433	0.452	0.471
700	0.235	0.269	0.286	0.303	0.333	0.364	0.395	0.426	0.445	0.463	0.482	0.500
750	0.252	0.294	0.314	0.335	0.363	0.390	0.424	0.458	0.476	0.494	0.512	0.530
800	0.269	0.319	0.343	0.368	0.393	0.417	0.453	0.489	0.507	0.524	0.542	0.559
850	0.286	0.339	0.365	0.392	0.418	0.444	0.482	0.520	0.542	0.563	0.585	0.606
900	0.304	0.359	0.387	0.415	0.443	0.471	0.511	0.552	0.577	0.602	0.627	0.653
950	0.321	0.380	0.409	0.439	0.468	0.497	0.540	0.583	0.612	0.641	0.670	0.699
1000	0.338	0.4	0.431	0.462	0.493	0.524	0.569	0.614	0.647	0.68	0.713	0.746

Pressure loss and sound power level

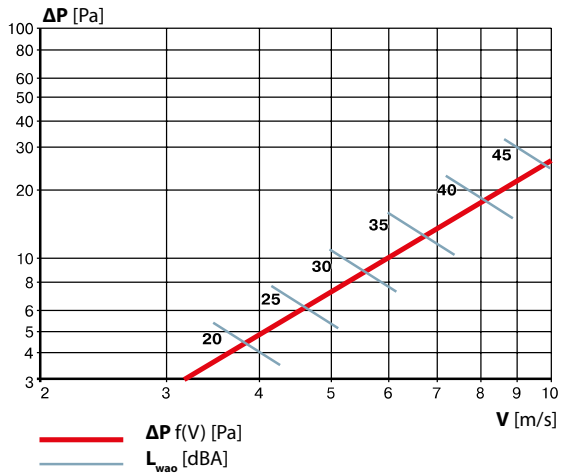

Calculation formula
$\Delta P_p = \Delta P \times K_p$

Correction factor K_p			
	0°	22°	45°
K_p	1	1.25	1.5

Calculation formula
$L_{WA} = L_{WAO} \times K$

Correction factor K						
S_{ap} [m²]	0.01	0.02	0.05	0.07	0.1	0.2
K [dBA]	–9	–6	–3	–1.5	0	+3

Designation:

ΔP_p – pressure loss at various vane positions [Pa]

ΔP – pressure loss [Pa]

K_p – correction factor for pressure loss calculation depending on louvre deflection angle

L_{WA} – sound power level [dBA]

L_{WAO} – sound power level for air pass 0.1 m² [dBA]

K – correction factor for sound power level calculation depending on air pass [dBA]

S_{ap} – air pass [m²]

V – rated speed [m/s]

Order code

LxH □□ □□□

Grille type:

ORK – single-row sectional grille with individually adjustable louvres

Vane position:

1 – parallel (deflection angle 0°)

2 – pairwise perpendicular (deflection angle 15°)

Grille size:

L – length [mm]

H – height [mm]

Grille coating:

"__" – colour* (white by default)

"Anodized"

Accessories:

__ – no

R – air flow regulator

A – adapter

Grille fixation:

u – versatile

*** Standard polymer coating colours:**

white RAL 9016	beige RAL 1015	brown RAL 8017	grey RAL 7001	blue RAL 5005	black RAL 9005

Overall and mounting dimensions

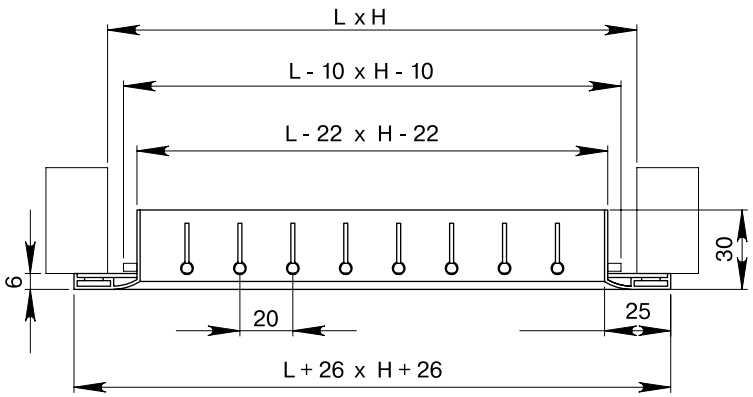

Series
DR

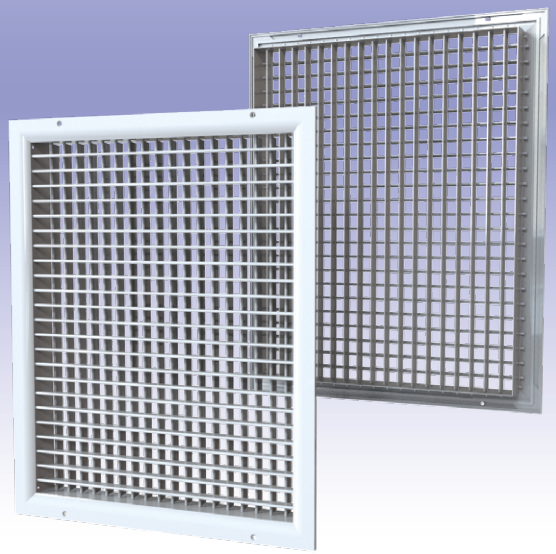

Double-row ventilation grille
with adjustable louvres

Application

- Supply and exhaust ventilation, heating and air conditioning networks in industrial, commercial and domestic premises.

Design

- Made of high-quality extruded aluminium.
- Two louvre rows provide smooth air flow distribution.
- Smooth air direction adjustment (360°).
- Polymer or anodized grille coating ensures weather-resistant properties.
- Non-standard sizes may be ordered.

Modifications

- Available modifications with an air flow regulator (R) and an adapter (A) for connection to air ducts.
- Available modifications with versatile fixing (u) for fast mounting.

Standard size [mm] and air pass [m²]

Height H [mm]	Length L [mm]																		
	100	150	200	250	300	350	400	450	500	550	600	650	700	750	800	850	900	950	1000
100	0.004	0.008	0.014	0.018	0.023	0.027	0.033	0.038	0.044	0.046	0.049	0.055	0.061	0.067	0.072	0.076	0.080	0.084	0.088
150		0.015	0.020	0.026	0.031	0.037	0.042	0.044	0.047	0.049	0.052	0.058	0.064	0.070	0.075	0.079	0.083	0.087	0.091
200			0.025	0.034	0.040	0.048	0.054	0.063	0.072	0.077	0.082	0.089	0.096	0.104	0.112	0.118	0.124	0.130	0.136
250				0.045	0.053	0.064	0.072	0.082	0.093	0.099	0.105	0.112	0.118	0.128	0.138	0.146	0.153	0.161	0.168
300					0.062	0.075	0.084	0.098	0.113	0.121	0.129	0.140	0.150	0.163	0.175	0.185	0.194	0.204	0.213
350						0.091	0.102	0.116	0.130	0.140	0.150	0.161	0.171	0.186	0.200	0.211	0.222	0.232	0.243
400							0.118	0.137	0.155	0.167	0.179	0.191	0.203	0.221	0.238	0.251	0.264	0.276	0.289
450								0.148	0.171	0.182	0.194	0.212	0.230	0.250	0.269	0.284	0.298	0.313	0.327
500									0.187	0.197	0.208	0.232	0.257	0.279	0.301	0.317	0.333	0.349	0.365
550										0.199	0.223	0.253	0.283	0.308	0.332	0.350	0.367	0.385	0.403
600											0.237	0.274	0.310	0.337	0.363	0.383	0.402	0.422	0.441
650												0.137	0.233	0.314	0.395	0.414	0.433	0.452	0.471
700													0.155	0.291	0.426	0.445	0.463	0.482	0.500
750														0.145	0.458	0.476	0.494	0.512	0.530
800															0.489	0.507	0.524	0.542	0.559
850																0.253	0.393	0.500	0.606
900																	0.262	0.457	0.653
950																		0.229	0.699
1000																			0.746

Pressure loss and sound power level

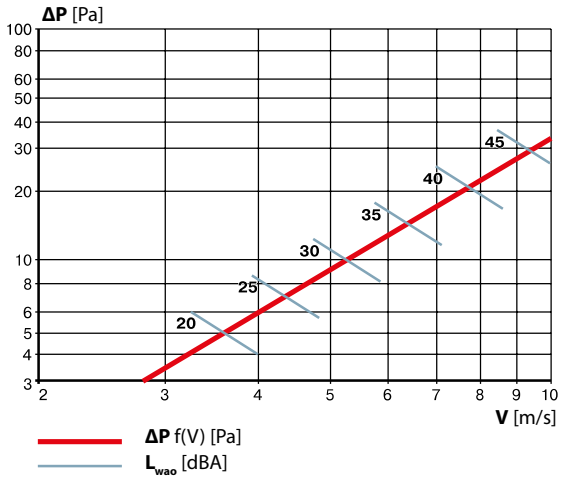

Calculation formula
$\Delta P_p = \Delta P \times K_p$

Correction factor K_p			
	0°	22°	45°
K_p	1	1.25	1.5

Calculation formula
$L_{WA} = L_{WAO} \times K$

Correction factor K						
S_{ap} [m²]	0.01	0.02	0.05	0.07	1	2
K [dBA]	–9	–6	–3	–1.5	0	+3

Designation:

ΔP_p – pressure loss at various vane positions [Pa]
ΔP – pressure loss [Pa]
K_p – correction factor for pressure loss calculation depending on louvre deflection angle
L_{WA} – sound power level [dBA]
L_{WAO} – sound power level for air pass 0.1 m² [dBA]
K – correction factor for sound power level calculation depending on air pass [dBA]
S_{ap} – air pass [m²]
V – rated speed [m/s]

Order code

LxH□□□

Grille type:
DR – double-row grille with individually adjustable louvres

Grille size:
L – length [mm]
H – height [mm]

Grille coating:
"__" – colour* (white by default)
"Anodized"

Accessories:
__ – no
R – air flow regulator
A – adapter

Grille fixation:
u – versatile

*** Standard polymer coating colours:**

white	beige	brown	grey	blue	black
RAL 9016	RAL 1015	RAL 8017	RAL 7001	RAL 5005	RAL 9005

Overall and mounting dimensions

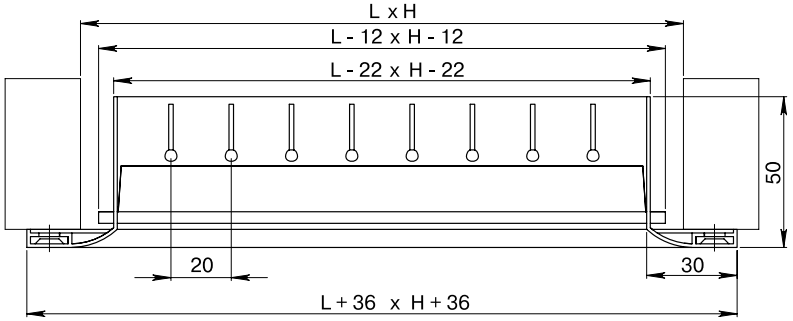

Series
DP

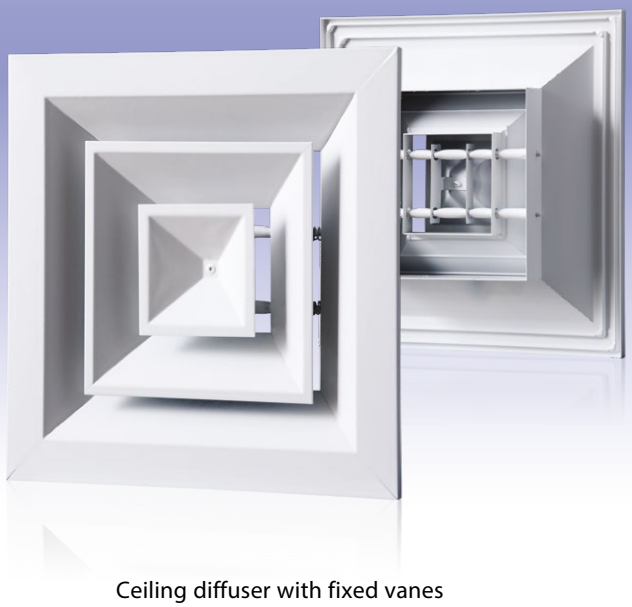

Ceiling diffuser with fixed vanes

Application

- Supply and exhaust ventilation, heating and air conditioning networks in industrial, commercial and domestic premises.

Design

- Made of high-quality extruded aluminium.
- Four-sided uniform air flow distribution.
- Ideal solution for installation into the Armstrong suspended ceilings.
- Polymer or anodized grille coating ensures weather-resistant properties.
- Non-standard sizes may be ordered.

Modifications

- Available modifications with an air flow regulator (R) and an adapter (A) for connection to air ducts.

Standard size [mm] and air pass [m²]

	Length L [mm]							
Height H [mm]	L		258	326	394	462	530	600
	H	l / h	146	213	282	349	418	488
	258	146	0.015	0.020	0.024	0.029	0.034	0.038
	326	213		0.030	0.037	0.044	0.051	0.058
	394	282			0.049	0.058	0.068	0.077
	462	349				0.073	0.085	0.096
	530	418					0.101	0.115
	600	488						0.134

Pressure loss and sound power level

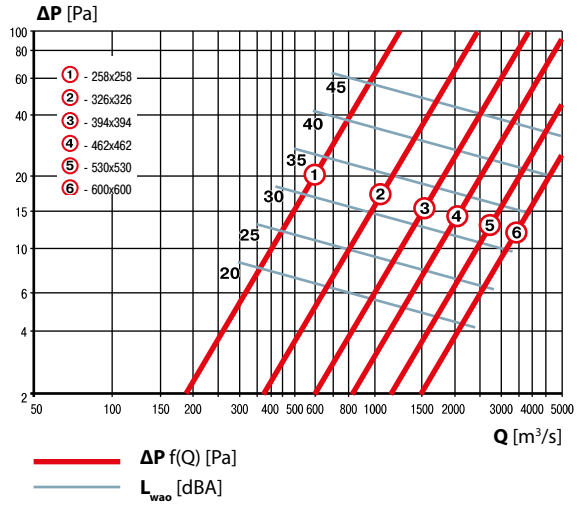

Designation:

ΔP – pressure loss [Pa]

Q – air flow [m³/h]

L_{WA} –sound power level [dBA]

Order code

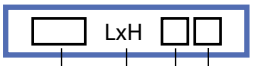

Grille type:

DP – ceiling diffuser

Grille coating:

"___" – colour* (white by default)

"Anodized"

Grille size:

L – length [mm]

H – height [mm]

Accessories:

___ – no

R – air flow regulator

A – adapter

*** Standard polymer coating colours:**



white	beige	brown	grey	blue	black
RAL 9016	RAL 1015	RAL 8017	RAL 7001	RAL 5005	RAL 9005

Overall and mounting dimensions

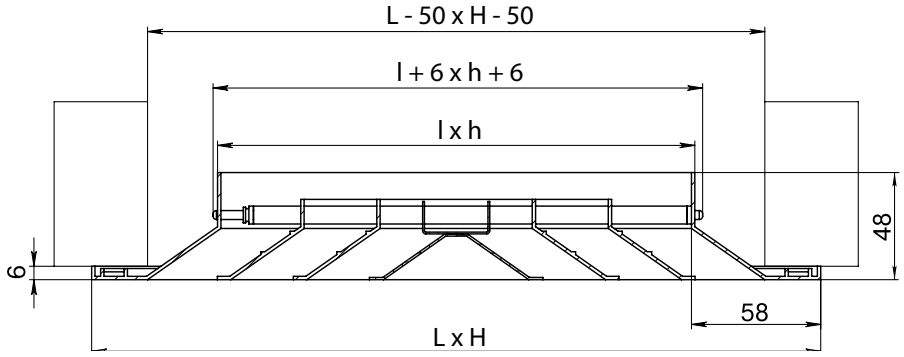

Series
DPp

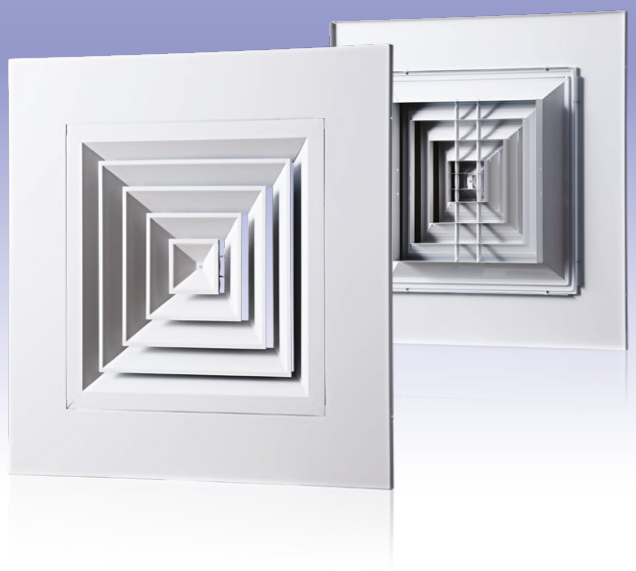

Ceiling diffuser with fixed vanes

Application

- Supply and exhaust ventilation, heating and air conditioning networks in industrial, commercial and domestic premises.

Design

- Made of high-quality extruded aluminium.
- Four-sided uniform air flow distribution.
- Ideal solution for installation into the Armstrong suspended ceilings.
- Polymer or anodized grille coating ensures weather-resistant properties.
- Non-standard sizes may be ordered.

Modifications

- Available modifications with an air flow regulator (R) and an adapter (A) for connection to air ducts.

Standard size [mm] and air pass [m²]

A	B	Air pass [m²]			
595	140	0.014			
595	215		0.034		
595	290			0.053	
595	365				0.084

Pressure loss and sound power level

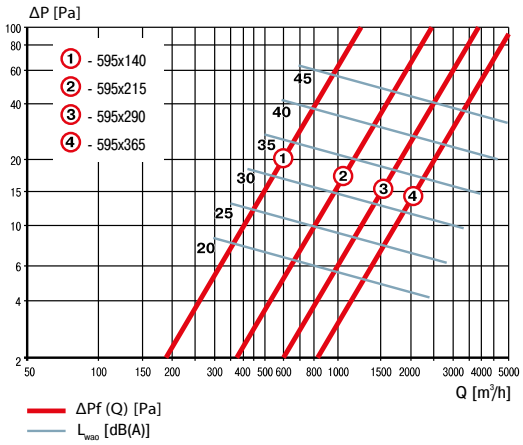

Designation:

ΔP – pressure loss [Pa]

Q – air flow [m³/h]

L_{WA} –sound power level [dBA]

Order code

AxB □□

Grille type:

DPp – ceiling diffuser

Grille coating:

"__" – colour* (white by default)

"Anodized"

Grille size:

A – outer size [mm]

V – cross section size [mm]

Accessories:

__ – no

R – air flow regulator

A – adapter

*** Standard polymer coating colours:**

white	beige	brown	grey	blue	black
RAL 9016	RAL 1015	RAL 8017	RAL 7001	RAL 5005	RAL 9005

Overall and mounting dimensions

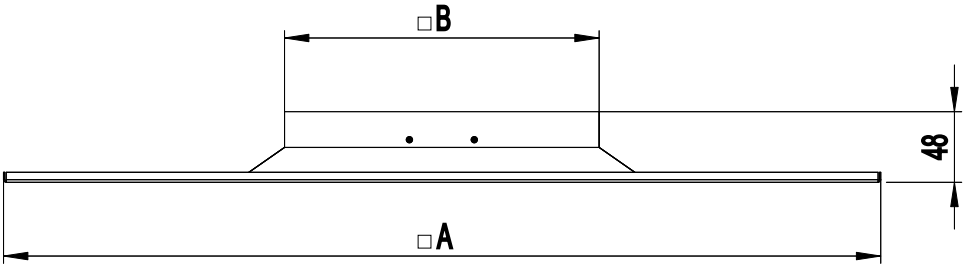

Series
DS



Slit diffuser

Application

- Supply and exhaust ventilation, heating and air conditioning networks in industrial, commercial and domestic premises.

Design

- Made of high-quality extruded aluminium.
- Focused air flow distribution.
- Air flow direction control.
- Polymer or anodized grille coating ensures weather-resistant properties.
- Non-standard sizes may be ordered.

Modifications

- Available modifications with an adapter (A) for connection to air ducts.
- Available modifications with versatile fixing (u) or with special springs (p) for fast mounting.

Standard size [mm] and air pass [m²]

Height H [mm]		Length L [mm]														
Number of slits	H, mm	200	300	400	500	600	700	800	900	1000	1200	1400	1500	1600	1800	2000
1	62	0.0043	0.0067	0.009	0.0114	0.0138	0.0162	0.0186	0.0209	0.0233	0.0281	0.0328	0.0352	0.0376	0.0423	0.0471
2	106	0.0086	0.0134	0.0180	0.0228	0.0276	0.0324	0.0372	0.0418	0.0466	0.0562	0.0656	0.0704	0.0752	0.0846	0.0942
3	151	0.0129	0.0201	0.0270	0.0342	0.0414	0.0486	0.0558	0.0627	0.0699	0.0843	0.0984	0.1056	0.1128	0.1269	0.1413
4	195	0.0172	0.0268	0.0360	0.0456	0.0552	0.0648	0.0744	0.0836	0.0932	0.1124	0.1312	0.1408	0.1504	0.1692	0.1884
5	239	0.0215	0.0335	0.0450	0.0570	0.0690	0.0810	0.0930	0.1045	0.1165	0.1405	0.1640	0.1760	0.1880	0.2115	0.2355
6	283	0.0258	0.0402	0.0540	0.0684	0.0828	0.0972	0.1116	0.1254	0.1398	0.1686	0.1968	0.2112	0.2256	0.2538	0.2826

Pressure loss and sound power level

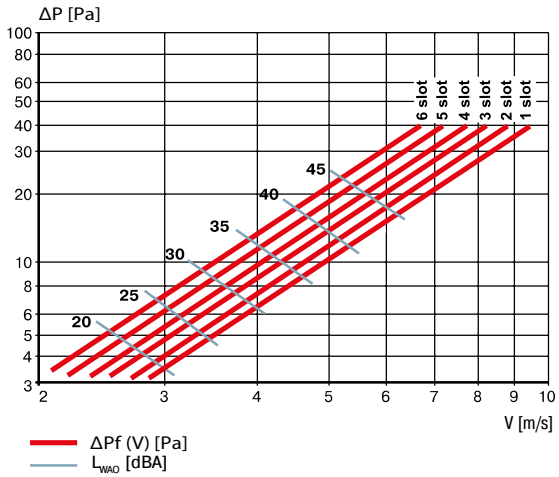

Calculation formula
$\Delta P_p = \Delta P \times K_p$

Correction factor K_p		
	0°	45°
K_p	1	1.5

Calculation formula
$L_{WA} = L_{WAO} \times K$

Correction factor K						
S_{ap} [m²]	0.01	0.02	0.05	0.1	0.2	0.4
K [dBA]	–9	–6	–3	0	+3	+6

Designation:

ΔP_p – pressure loss at various vane positions [Pa]
ΔP – pressure loss [Pa]
K_p – correction factor for pressure loss calculation depending on louvre deflection angle
L_{WA} – sound power level [dBA]
L_{WAO} – sound power level for air pass 0.1 m² [dBA]
K – correction factor for sound power level calculation depending on air pass [dBA]
S_{ap} – air pass [m²]
V – rated speed [m/s]

Order code

□ □xLxH □□□

Grille coating:
"__" – colour* (white by default)
"Anodized"

Grille type:
DS – slit diffuser

Number of slits:
1, 2, 3, 4, 5, 6

Accessories:
__– no
A – adapter

Grille size:
L – length [mm]
H – height [mm]

Grille fixation:
u – versatile
p – spring

*** Standard polymer coating colours:**

white RAL 9016	beige RAL 1015	brown RAL 8017	grey RAL 7001	blue RAL 5005	black RAL 9005

Overall and mounting dimensions

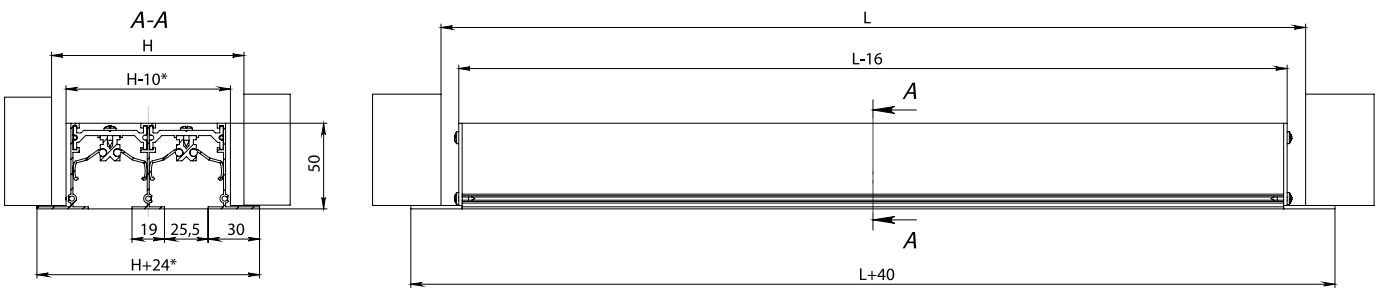

Series
RP

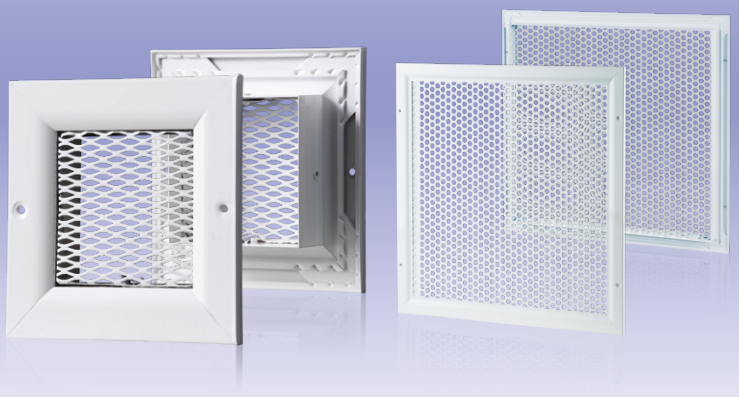

Exhaust ventilation grille with a mesh insert

Application

- Supply and exhaust ventilation, heating and air conditioning networks in industrial, commercial and domestic premises.

Design

- Made of high-quality extruded aluminium shape and an insert piece of perforated steel or expanded mesh.
- Polymer or anodized grille coating ensures weather-resistant properties.
- Non-standard sizes may be ordered.

Modifications

- Available modifications with an adapter (A) for connection to air ducts.
- Available modifications with versatile fixing (u) or with special springs (p) for fast mounting.



RP1 – expanded metal insert

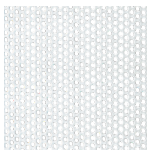

RP2 –perforated insert with round holes

Standard size [mm] and air pass [m²]

Expanded metal sheet

Height H [mm]	Length L [mm]													
	100	150	200	250	300	350	400	450	500	600	700	800	900	1000
100	0.006	0.008	0.010	0.012	0.016	0.018	0.020	0.023	0.026	0.033	0.037	0.043	0.047	0.050
150		0.010	0.015	0.019	0.024	0.027	0.030	0.041	0.046	0.051	0.059	0.068	0.075	0.082
200			0.022	0.028	0.036	0.040	0.044	0.054	0.062	0.076	0.087	0.102	0.113	0.124
250				0.038	0.042	0.048	0.054	0.073	0.083	0.103	0.118	0.138	0.153	0.168
300					0.058	0.065	0.071	0.099	0.112	0.139	0.159	0.176	0.199	0.221
350						0.067	0.087	0.110	0.123	0.153	0.175	0.211	0.231	0.252
400							0.102	0.120	0.134	0.166	0.190	0.245	0.264	0.282
450								0.143	0.162	0.201	0.230	0.269	0.299	0.328
500									0.184	0.228	0.261	0.305	0.338	0.371
600										0.283	0.324	0.378	0.419	0.460
700											0.370	0.433	0.480	0.527
800												0.505	0.561	0.616
900													0.628	0.684
1000														0.751

Perforated sheet

Height H [mm]	Length L [mm]													
	100	150	200	250	300	350	400	450	500	600	700	800	900	1000
100	0.003	0.005	0.007	0.009	0.011	0.013	0.015	0.017	0.019	0.024	0.026	0.032	0.035	0.038
150		0.008	0.012	0.014	0.017	0.021	0.024	0.027	0.031	0.039	0.043	0.520	0.058	0.063
200			0.017	0.021	0.026	0.031	0.035	0.040	0.046	0.057	0.063	0.076	0.084	0.092
250				0.026	0.032	0.038	0.044	0.050	0.057	0.071	0.078	0.094	0.104	0.114
300					0.041	0.049	0.056	0.063	0.071	0.088	0.101	0.118	0.131	0.143
350						0.059	0.066	0.074	0.083	0.104	0.119	0.139	0.154	0.169
400							0.076	0.085	0.095	0.120	0.137	0.160	0.177	0.194
450								0.096	0.109	0.135	0.149	0.180	0.198	0.216
500									0.123	0.138	0.153	0.170	0.204	0.246
600										0.154	0.171	0.190	0.228	0.274
700											0.189	0.210	0.253	0.304
800												0.233	0.281	0.338
900													0.338	0.407
1000														0.489

Pressure loss and sound power level

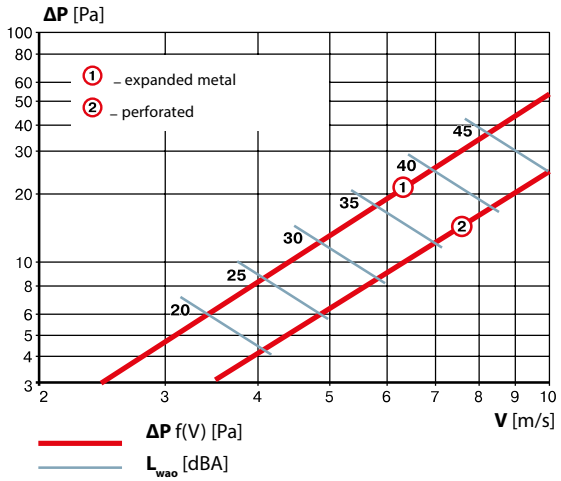

Calculation formula
$L_{WA}=L_{WAO}+K$

Correction factor K							
S_{ap} [m²]	0.001	0.01	0.02	0.05	0.1	0.2	0.4
K [dBA]	–	–	–	–	0	+3	+6

Designation:

ΔP – pressure loss [Pa]

L_{WA} – sound power level [dBA]

L_{WAO} – sound power level for air pass 0.1 m² [dBA]

K – correction factor for sound power level calculation depending on air pass [dBA]

S_{ap} – air pass [m²]

V – rated speed [m/s]

Order code

□□ LxH □□□

Grille type:

RP – grille with a mesh insert

Filling insert type:

1 – expanded metal

2 – perforated with round holes

Grille size:

L – length [mm]

H – height [mm]

Grille coating:

"___" – colour* (white by default)

"Anodized"

Accessories:

___ – no

A – adapter

Grille fixation:

u – versatile

p – spring

*** Standard polymer coating colours:**

white	beige	brown	grey	blue	black
RAL 9016	RAL 1015	RAL 8017	RAL 7001	RAL 5005	RAL 9005

Overall and mounting dimensions

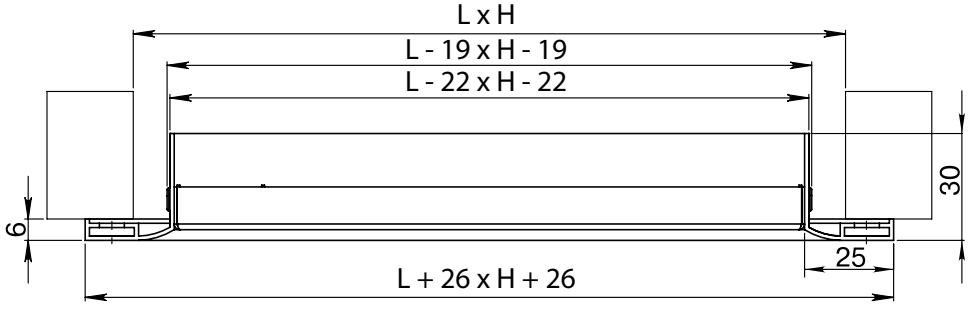

Series
RN



Supply and exhaust ventilation grille
with fixed vanes

Application

- Supply and exhaust ventilation, heating and air conditioning networks in industrial, commercial and domestic premises.

Design

- Made of high-quality extruded aluminium shape and an insert piece of perforated steel or expanded mesh.
- Reinforced frame design provides 100 % grille rigidity.
- Special vane design prevents water ingress into a ventilation system.
- A built-in protecting mesh prevents ingress of foreign objects into a ventilation system.
- Polymer or anodized grille coating ensures weather-resistant properties.
- Non-standard sizes may be ordered.

Modifications

- Available modifications with an adapter (A) for connection to air ducts.
- Available modifications with versatile fixing (u) for fast mounting.

Air flow distributions

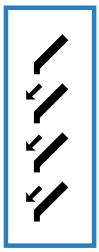

fixed (45˚)

Standard size [mm] and air pass [m²]

Height H [mm]	Length L [mm]									
	300	350	400	450	500	600	700	800	900	1000
300	0.039	0.047	0.054	0.061	0.067	0.079	0.087	0.099	0.115	0.127
350		0.059	0.066	0.074	0.082	0.096	0.106	0.121	0.140	0.155
400			0.078	0.087	0.096	0.112	0.125	0.143	0.164	0.182
450				0.102	0.111	0.131	0.144	0.165	0.189	0.210
500					0.125	0.150	0.163	0.187	0.213	0.237
600						0.168	0.201	0.231	0.262	0.292
700							0.239	0.275	0.311	0.347
800								0.318	0.360	0.401
900									0.409	0.456
1000										0.511

Pressure loss and sound power level

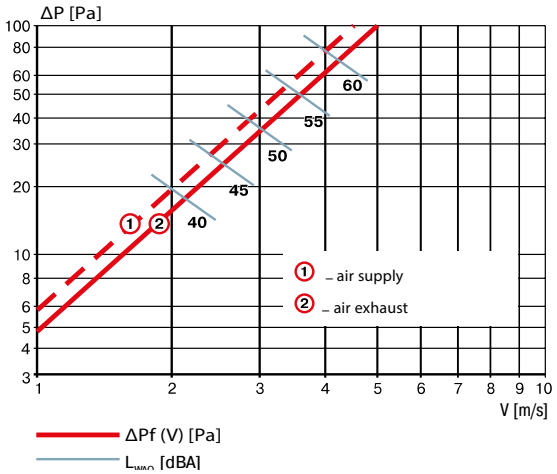

Calculation formula
$L_{WA}=L_{WAO}+K$

Correction factor K								
S_{ap} [m²]	0.03	0.05	0.07	0.10	0.15	0.2	0.3	0.4
K [dBA]	4.5	3	1.5	0	+1.5	+3	+4.5	+6

Designation:

ΔP – pressure loss [Pa]

L_{WA} – sound power level [dBA]

L_{WAO} – sound power level for air pass 0.1 m² [dBA]

K – correction factor for sound power level calculation depending on air pass [dBA]

S_{ap} – air pass [m²]

V – rated speed [m/s]

Order code

LxH □□□

Grille type:

RN – outer grille

Grille size:

L – length [mm]

H – height [mm]

Grille coating:

"__" – colour* (white by default)

"Anodized"

Accessories:

__ – no

A – adapter

Grille fixation:

u – versatile

*** Standard polymer coating colours:**

white	beige	brown	grey	blue	black
RAL 9016	RAL 1015	RAL 8017	RAL 7001	RAL 5005	RAL 9005

Overall and mounting dimensions

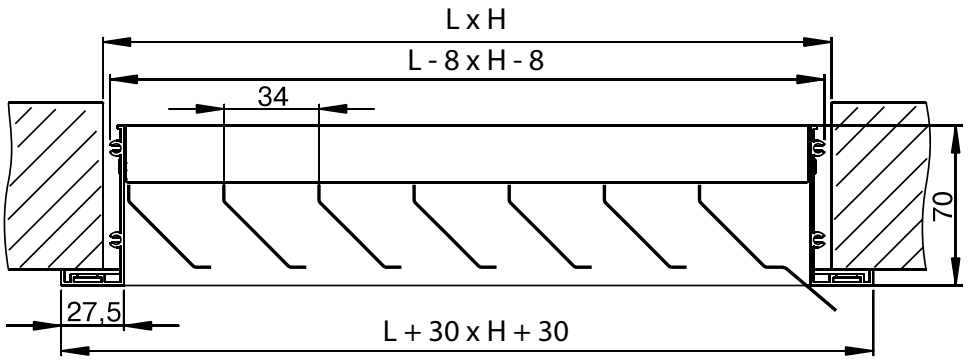

Series
RG



Ventilation grille with gravity shutters

Application

- Exhaust ventilation, heating and air conditioning networks in industrial, commercial and domestic premises.

Design

- Made of high-quality extruded aluminium shape and an insert piece of perforated steel or expanded mesh.
- Polymer or anodized grille coating ensures weather-resistant properties.
- Non-standard sizes may be ordered.

Modifications

- Available modifications with an adapter (A) for connection to air ducts.
- Available modifications with versatile fixing (u) for fast mounting.

Standard size [mm] and air pass [m²]

Height H [mm]	Length L [mm]								
	100	150	200	250	300	350	400	450	500
100	0.002	0.008	0.014	0.018	0.023	0.027	0.033	0.038	0.044
150	0.005	0.011	0.017	0.021	0.026	0.030	0.036	0.041	0.047
200	0.008	0.018	0.025	0.031	0.040	0.045	0.054	0.062	0.072
250	0.010	0.021	0.032	0.038	0.048	0.055	0.066	0.076	0.043
300	0.013	0.027	0.041	0.051	0.062	0.071	0.084	0.096	0.113
350	0.016	0.031	0.046	0.057	0.073	0.081	0.096	0.11	0.13
400	0.019	0.037	0.055	0.068	0.087	0.100	0.114	0.131	0.155
450	0.022	0.042	0.062	0.077	0.098	0.112	0.132	0.148	0.171
500	0.024	0.047	0.069	0.085	0.109	0.125	0.144	0.166	0.187

Pressure loss and sound power level

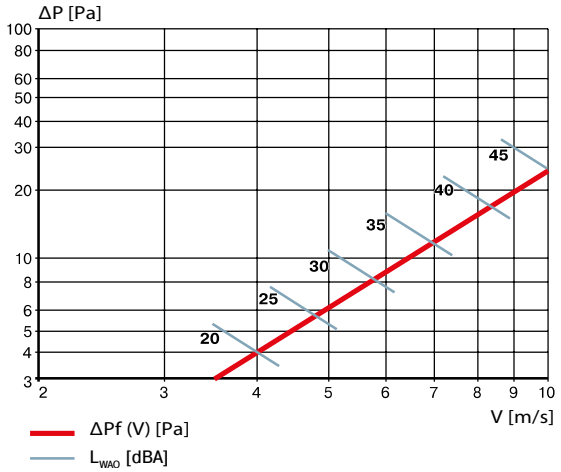

Calculation formula
$\Delta P_p = \Delta P \times K_p$

Correction factor K_p			
	0°	22°	45°
K_p	1	1.25	1.5

Calculation formula
$L_{WA} = L_{WAO} \times K$

Correction factor K						
S_{ap} [m²]	0.01	0.02	0.05	0.1	0.2	0.4
K [dBA]	–9	–6	–3	0	+3	+6

Designation:

ΔP_p – pressure loss at various vane positions [Pa]

ΔP – pressure loss [Pa]

K_p – correction factor for pressure loss calculation depending on louvre deflection angle

L_{WA} – sound power level [dBA]

L_{WAO} – sound power level for air pass 0.1 m² [dBA]

K – correction factor for sound power level calculation depending on air pass [dBA]

S_{ap} – air pass [m²]

V – rated speed [m/s]

Order code

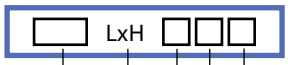

Grille type:

RG – gravity grille

Grille size:

L – length [mm]

H – height [mm]

Grille coating:

"__" – colour* (white by default)

"Anodized"

Accessories:

__ – no

A – adapter

Grille fixation:

u – versatile

*** Standard polymer coating colours:**

white	beige	brown	grey	blue	black
RAL 9016	RAL 1015	RAL 8017	RAL 7001	RAL 5005	RAL 9005

Overall and mounting dimensions

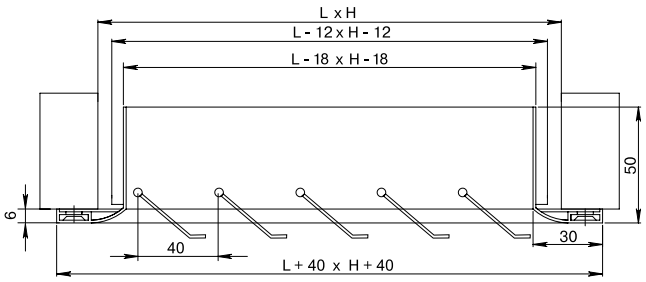

Series
RGS



Sectional ventilation grille
with gravity shutters

Application

- Exhaust ventilation, heating and air conditioning networks in industrial, commercial and domestic premises.

Design

- Made of high-quality extruded aluminium shape and an insert piece of perforated steel or expanded mesh.
- Polymer or anodized grille coating ensures weather-resistant properties.
- Non-standard sizes may be ordered.

Modifications

- Available modifications with an adapter (A) for connection to air ducts.
- Available modifications with versatile fixing (u) or with special springs (p) for fast mounting.

Standard size [mm] and air pass [m²]

Height H [mm]	Length L [mm]																						
	100	140	180	220	260	300	340	380	420	460	500	540	580	620	660	700	740	780	820	860	900	940	980
100	–	–	–	–	–	–	–	–	–	–	–	0.045	0.048	0.053	0.058	0.061	0.066	0.07	0.074	0.078	0.08	0.083	0.087
140	–	–	–	–	–	–	–	–	–	–	–	0.064	0.068	0.075	0.083	0.086	0.093	0.1	0.106	0.111	0.115	0.119	0.123
180	–	–	–	–	–	–	–	–	–	–	–	0.083	0.088	0.097	0.108	0.111	0.12	0.13	0.138	0.144	0.15	0.155	0.159
220	–	–	–	–	–	–	–	–	–	–	–	0.102	0.108	0.119	0.133	0.136	0.147	0.16	0.17	0.177	0.185	0.191	0.195
260	–	–	–	–	–	–	–	–	–	–	–	0.121	0.128	0.141	0.158	0.161	0.174	0.19	0.202	0.21	0.22	0.227	0.231
300	–	–	–	–	–	–	–	–	–	–	–	0.14	0.148	0.163	0.183	0.186	0.201	0.22	0.234	0.243	0.255	0.263	0.267
340	–	–	–	–	–	–	–	–	–	–	–	0.159	0.168	0.185	0.208	0.211	0.228	0.25	0.266	0.276	0.29	0.299	0.303
380	–	–	–	–	–	–	–	–	–	–	–	0.178	0.188	0.207	0.233	0.236	0.255	0.28	0.298	0.309	0.325	0.335	0.339
420	–	–	–	–	–	–	–	–	–	–	–	0.197	0.208	0.229	0.258	0.261	0.282	0.31	0.33	0.342	0.36	0.371	0.375
460	–	–	–	–	–	–	–	–	–	–	–	0.216	0.228	0.251	0.283	0.286	0.309	0.34	0.362	0.375	0.395	0.407	0.411
500	–	–	–	–	–	–	–	–	–	–	–	0.235	0.248	0.273	0.308	0.311	0.336	0.37	0.394	0.408	0.43	0.443	0.447
540	0.024	0.04	0.078	0.104	0.118	0.1	0.125	0.14	0.145	0.172	0.231	0.254	0.268	0.295	0.333	0.336	0.363	0.4	0.426	0.441	0.465	0.479	0.483
580	0.026	0.043	0.084	0.112	0.127	0.107	0.134	0.15	0.155	0.184	0.248	0.273	0.288	0.317	0.358	0.361	0.39	0.43	0.458	0.474	0.5	0.515	0.519
620	0.028	0.046	0.09	0.12	0.136	0.114	0.143	0.16	0.165	0.196	0.265	0.292	0.308	0.339	0.383	0.386	0.417	0.46	0.49	0.507	0.535	0.551	0.555
660	0.03	0.049	0.096	0.128	0.145	0.121	0.152	0.17	0.175	0.208	0.282	0.311	0.328	0.361	0.408	0.411	0.444	0.49	0.522	0.54	0.57	0.587	0.591
700	0.032	0.052	0.102	0.136	0.154	0.128	0.161	0.18	0.185	0.22	0.299	0.33	0.348	0.383	0.433	0.436	0.471	0.52	0.554	0.573	0.605	0.623	0.627
740	0.034	0.055	0.108	0.144	0.163	0.135	0.17	0.19	0.195	0.232	0.316	0.349	0.368	0.405	0.458	0.461	0.498	0.55	0.586	0.606	0.64	0.659	0.663
780	0.036	0.058	0.114	0.152	0.172	0.142	0.179	0.2	0.205	0.244	0.333	0.368	0.388	0.427	0.483	0.486	0.525	0.58	0.618	0.639	0.675	0.695	0.699
820	0.038	0.061	0.12	0.16	0.181	0.149	0.188	0.21	0.215	0.256	0.35	0.387	0.408	0.449	0.508	0.511	0.552	0.61	0.65	0.672	0.71	0.731	0.735
860	0.04	0.064	0.126	0.168	0.19	0.156	0.197	0.22	0.225	0.268	0.367	0.406	0.428	0.471	0.533	0.536	0.579	0.64	0.682	0.705	0.745	0.767	0.771
900	0.042	0.067	0.132	0.176	0.199	0.163	0.206	0.23	0.235	0.28	0.384	0.425	0.448	0.493	0.558	0.561	0.606	0.67	0.714	0.738	0.78	0.803	0.807
940	0.044	0.07	0.138	0.184	0.208	0.17	0.215	0.24	0.245	0.292	0.401	0.444	0.468	0.515	0.583	0.586	0.633	0.7	0.746	0.771	0.815	0.839	0.843
980	0.046	0.073	0.144	0.192	0.217	0.177	0.224	0.25	0.255	0.304	0.418	0.463	0.488	0.537	0.608	0.611	0.66	0.73	0.778	0.804	0.85	0.875	0.879

Pressure loss and sound power level

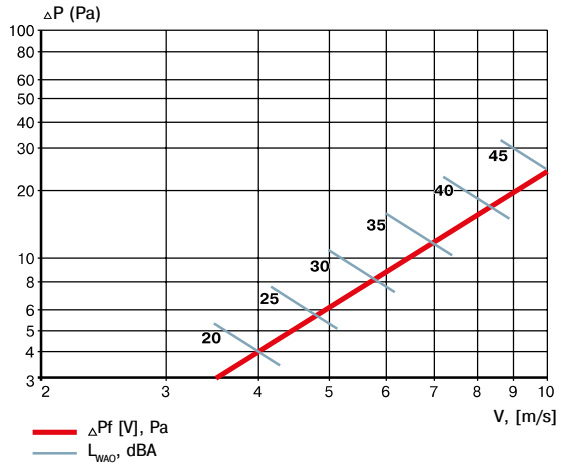

Calculation formula
$\Delta P_p = \Delta P \times K_p$

Correction factor K_p			
	0°	22°	45°
K_p	1	1.25	1.5

Calculation formula
$L_{WA} = L_{WAO} \times K$

Correction factor K						
S_{ap} [m²]	0.01	0.02	0.05	0.1	0.2	0.4
K [dBA]	–9	–6	–3	0	+3	+6

Designation:

ΔP_p – pressure loss at various vane positions [Pa]

ΔP – pressure loss [Pa]

K_p – correction factor for pressure loss calculation depending on louvre deflection angle

L_{WA} – sound power level [dBA]

L_{WAO} – sound power level for air pass 0.1 m² [dBA]

K – correction factor for sound power level calculation depending on air pass [dBA]

S_{ap} – air pass [m²]

V – rated speed [m/s]

Order code

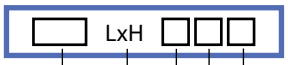

Grille type:
RGS – gravity grille

Grille size:
L – length [mm]
H – height [mm]

Grille coating:
"___" – colour* (white by default)
"Anodized"

Accessories:
___– no
A – adapter

Grille fixation:
u – versatile
p – spring

*** Standard polymer coating colours:**

white	beige	brown	grey	blue	black
RAL 9016	RAL 1015	RAL 8017	RAL 7001	RAL 5005	RAL 9005

Overall and mounting dimensions

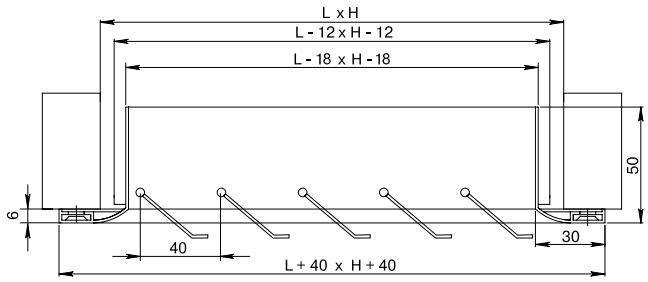

Series
GRM



Ventilation grille with gravity shutters

Application

- Exhaust ventilation, heating and air conditioning networks in industrial, commercial and domestic premises.

Design

- Made of high-quality metal shape with polymer coating
- Polymer or anodized grille coating ensures weather-resistant properties.
- Shutters are made of PVC plactic.
- Non-standard sizes may be ordered.

Modifications

- Available modifications with an adapter (A) for connection to air ducts.
- Available modifications with versatile fixing (u) or with special springs (p) for fast mounting.

Standard size [mm]

Model	Inner cross section size	L	L1	L2	e
GRM 200	116x116	200	150	136	–
GRM 250	166x166	250	200	186	–
GRM 285	200x200	284	234	220	–
GRM 300	216x216	300	250	236	–
GRM 335	250x250	334	284	270	–
GRM 350	266x266	350	300	286	–
GRM 385	300x300	384	334	320	–
GRM 400	316x316	400	350	336	–
GRM 435	350x350	434	384	370	–
GRM 450	366x366	450	400	386	–
GRM 485	400x400	484	434	420	–
GRM 535	450x450	534	484	470	–
GRM 550	466x466	550	500	486	–
GRM 585	500x500	584	534	520	257.0
GRM 635	550x550	634	584	570	282.0
GRM 655	571x571	655	605	591	292.5
GRM 685	601x601	685	635	621	307.5
GRM 715	630x630	714	664	650	322.0
GRM 725	641x641	725	675	661	327.5
GRM 805	721x721	805	755	741	367.5
GRM 835	751x751	835	785	771	382.5

Pressure loss and sound power level

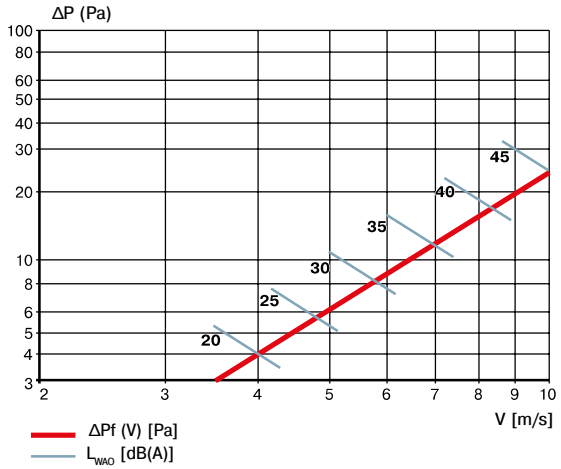

Calculation formula
$\Delta P_p = \Delta P \times K_p$

Correction factor K_p			
	0°	22°	45°
K_p	1	1.25	1.5

Calculation formula
$L_{WA} = L_{WAO} \times K$

Correction factor K						
S_{ap} [m²]	0.01	0.02	0.05	0.1	0.2	0.4
K [dBA]	–9	–6	–3	0	+3	+6

Designation:

ΔP_p – pressure loss at various vane positions [Pa]

ΔP – pressure loss [Pa]

K_p – correction factor for pressure loss calculation depending on louvre deflection angle

L_{WA} – sound power level [dBA]

L_{WAO} – sound power level for air pass 0.1 m² [dBA]

K – correction factor for sound power level calculation depending on air pass [dBA]

S_{ap} – air pass [m²]

V – rated speed [m/s]

Order code



Grille type:

GRM – gravity grille

Grille size:

L – outer size [mm]

Grille coating:

"__" – colour* (white by default)

Accessories:

__ – no

A – adapter

Grille fixation:

u – versatile

p – springs

*** Standard polymer coating colours:**

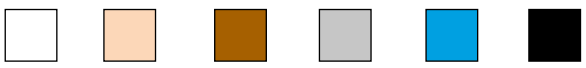

white RAL 9016	beige RAL 1015	brown RAL 8017	grey RAL 7001	blue RAL 5005	black RAL 9005

Overall and mounting dimensions

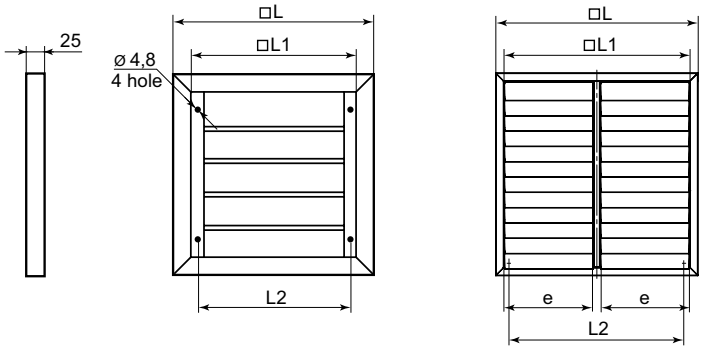

GRM 200 – GRM 550

GRM 585 – GRM 835

Series
DVK



Swirl diffusers

Application

- Supply and exhaust ventilation, heating and air conditioning networks in industrial, commercial and domestic premises.

Design

- The base made of high-quality polymer coated steel, the plastic inserts.
- Non-standard sizes may be ordered.

Modifications

- Suspended ceiling mounting.
- Air flow direction adjustment.

Overall and mounting dimensions [mm]

Type	A	B	C	Free area [m²]
DVK 295	295	295	25	0.015
DVK 305	305	305	25	0.015
DVK 395	395	395	25	0.030
DVK 445	445	445	25	0.030
DVK 495	495	495	25	0.050
DVK 595	595	595	25	0.075
DVK 620	620	620	25	0.075
DVK 695	695	695	25	0.075
DVK 795	795	795	25	0.075

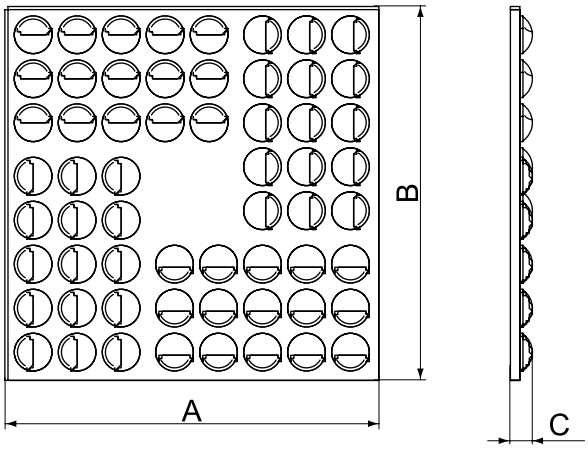

DVK2

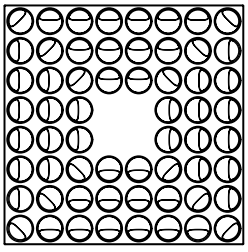

DVK1

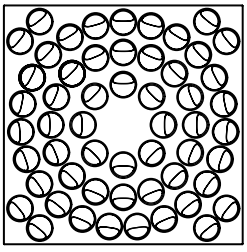

DVK3

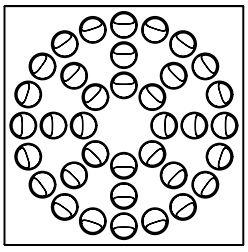

DVK4

Series
DVP



Swirl diffusers

Application

- Supply and exhaust ventilation, heating and air conditioning networks in industrial, commercial and domestic premises.

Design

- The base made of high-quality polymer coated steel, the plastic inserts.
- Non-standard sizes may be ordered.

Modifications

- Suspended ceiling mounting.
- Air flow direction adjustment

Overall and mounting dimensions [mm]

Type	A	B	C	Free area [m²]	Number of inserts
DVP 295	295	295	25	0.010	8
DVP 305	305	305	25	0.010	8
DVP 395	395	395	25	0.018	15
DVP 445	445	445	25	0.026	21
DVP 495	495	495	25	0.029	24
DVP 595	595	595	25	0.044	36
DVP 620	620	620	25	0.044	36
DVP 695	695	695	25	0.046	38
DVP 795	795	795	25	0.073	60

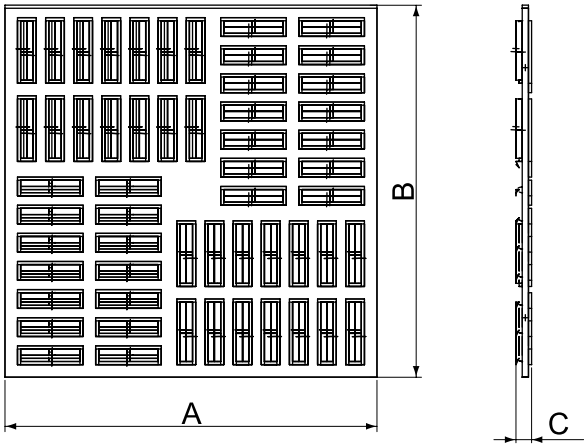

DVP1

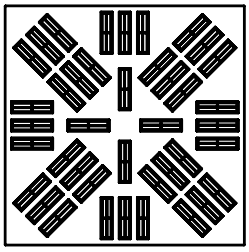

DVP2

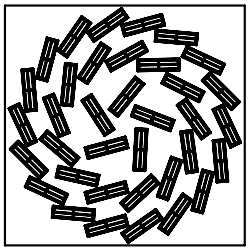

DVP3

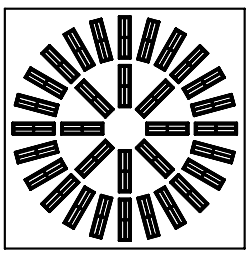

DVP4

Adapter A DP

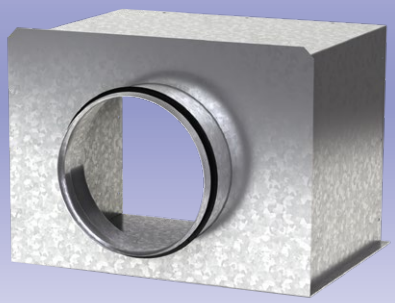

Application

- For connection of the square ceiling diffusers DP to round air ducts.

Design

- Made of galvanized steel.
- Equipped with a sealing ring for tight connection to air ducts.
- Two modifications: vertical and horizontal connection to the air duct.

Overall and mounting dimensions of the adapter for ceiling diffusers

Order code (grille size, mm)	l [mm]	h [mm]	øD [mm]	K [mm]	Weight [kg]
Ab DP 225x225/100	113.6	113.6	100	178.6	0.62
Av DP 225x225/100	113.6	113.6	100	205.2	0.62
Ab DP 260x260/100	148.6	148.6	100	213.6	0.83
Av DP 260x260/100	148.6	148.6	100	205.2	0.83
Ab DP 260x260/125	148.6	148.6	125	213.6	0.92
Av DP 260x260/125	148.6	148.6	125	230.2	0.92
Ab DP 300x300/150	188.6	188.6	150	253.6	1.3
Av DP 300x300/150	188.6	188.6	150	255.2	1.3
Ab DP 325x325/100	213.6	213.6	100	278.6	1.2
Av DP 325x325/100	213.6	213.6	100	205.2	1.2
Ab DP 325x325/160	213.6	213.6	160	278.6	1.56
Av DP 325x325/160	213.6	213.6	160	265.2	1.56
Ab DP 394x260/125	282.6	148.6	125	213.6	1.22
Av DP 394x260/125	282.6	148.6	125	205.2	1.22
Ab DP 394x325/150	282.6	213.6	150	278.6	1.9
Av DP 394x325/150	282.6	213.6	150	276.2	1.9
Ab DP 394x394/100	282.6	282.6	100	347.6	1.74
Av DP 394x394/100	282.6	282.6	100	205.2	1.74
Ab DP 394x394/200	282.6	282.6	200	347.6	2.4
Av DP 394x394/200	282.6	282.6	200	305.2	2.4
Ab DP 460x260/125	348.6	148.6	125	213.6	1.41
Av DP 460x260/125	348.6	148.6	125	205.2	1.41
Ab DP 460x325/150	348.6	213.6	150	278.6	2.2
Av DP 460x325/150	348.6	213.6	150	276.2	2.2
Ab DP 460x394/250	348.6	282.6	250	347.6	3.02
Av DP 460x394/250	348.6	282.6	250	346.2	3.02
Ab DP 460x460/100	348.6	348.6	100	413.6	2.28
Av DP 460x460/100	348.6	348.6	100	205.2	2.28
Ab DP 460x460/200	348.6	348.6	200	413.6	3.12
Av DP 460x460/200	348.6	348.6	200	305.2	3.12

Order code (grille size, mm)	l [mm]	h [mm]	øD [mm]	K [mm]	Weight [kg]
Ab DP 460x460/250	348.6	348.6	250	413.6	3.5
Av DP 460x460/250	348.6	348.6	250	355.2	3.5
Ab DP 530x260/125	418.6	148.6	125	213.6	1.62
Av DP 530x260/125	418.6	148.6	125	205.2	1.62
Ab DP 530x325/150	418.6	213.6	150	278.6	2.5
Av DP 530x325/150	418.6	213.6	150	276.2	2.5
Ab DP 530x394/250	418.6	282.6	250	347.6	3.4
Av DP 530x394/250	418.6	282.6	250	346.2	3.4
Ab DP 530x460/315	418.6	348.6	315	413.6	4.4
Av DP 530x460/315	418.6	348.6	315	416.2	4.4
Ab DP 596x596/160	484.6	484.6	160	549.6	4.2
Av DP 596x596/160	484.6	484.6	160	265.2	4.2
Ab DP 596x596/315	484.6	484.6	315	549.6	5.98
Av DP 596x596/315	484.6	484.6	315	420.2	5.98
Ab DP 596x260/125	488.6	148.6	125	213.6	1.82
Av DP 596x260/125	488.6	148.6	125	205.2	1.82
Ab DP 596x325/150	488.6	213.6	150	278.6	2.79
Av DP 596x325/150	488.6	213.6	150	276.2	2.79
Ab DP 596x394/250	488.6	282.6	250	347.6	3.8
Av DP 596x394/250	488.6	282.6	250	346.2	3.8
Ab DP 596x460/315	488.6	348.6	315	413.6	4.9
Av DP 596x460/315	488.6	348.6	315	416.2	4.9
Ab DP 596x530/315	488.6	418.6	315	483.6	5.45
Av DP 596x530/315	488.6	418.6	315	416.2	5.45
Ab DP 620x620/250	508.6	508.6	250	573.6	6.75
Av DP 620x620/250	508.6	508.6	250	455.2	6.75
Ab DP 695x695/315	583.6	583.6	315	648.6	8.04
Av DP 695x695/315	583.6	583.6	315	455.2	8.04
Ab DP 795x795/315	683.6	683.6	315	748.6	9.88
Av DP 795x795/315	683.6	683.6	315	455.2	9.88

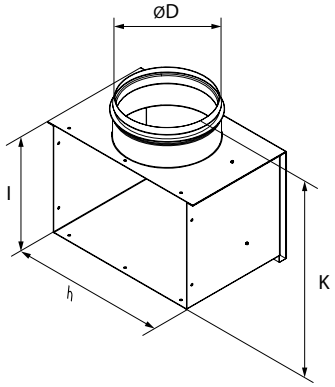

Horizontal adapter

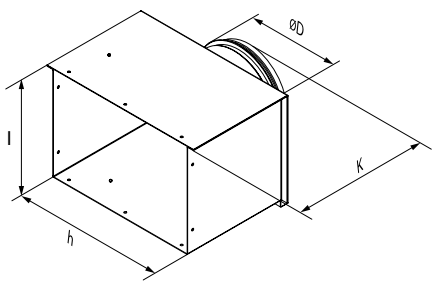

Vertical adapter

Order generation system



Model
A

Connection to a duct
b: horizontal connection
v: vertical connection

DP: type of diffusers
for which the adapter is designed for

Spigot diameter [mm]
Nominal diameter of the spigot for connection to the air duct

L x H: nominal size of the DP diffuser

Adapter A DR/ORK

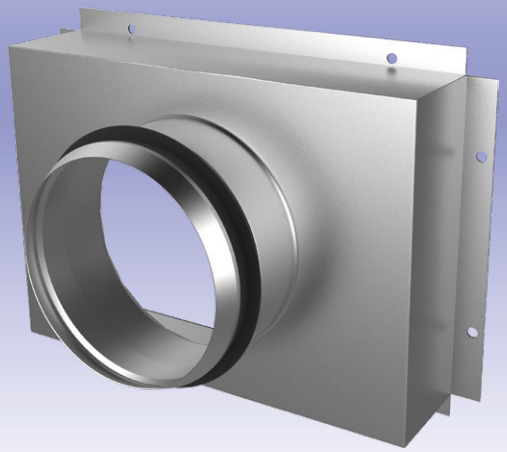

Application

- For connection of the ORK and DR grilles to round air ducts.

Design

- Made of galvanised steel.
- Equipped with a sealing ring for tight connection to air ducts.
- One modification: vertical connection to the air duct.

Overall and mounting dimensions of the adapter for ceiling diffusers:

Code (grille size, mm)	a [mm]	b [mm]	ØD [mm]	Weight [kg]
Av ORV 100x100/80	120.2	123.2	81	0.2
Av ORV 150x100/80	120.2	183.2	81	0.25
Av ORV 200x100/80	120.2	223.2	81	0.29
Av ORV 250x100/80	120.2	283.2	81	0.33
Av ORV 300x100/80	120.2	323.2	81	0.37
Av ORV 350x100/80	120.2	383.2	81	0.42
Av ORV 400x100/80	120.2	423.2	81	0.46
Av ORV 450x100/80	120.2	483.2	81	0.5
Av ORV 500x100/80	120.2	523.2	81	0.55
Av ORV 550x100/80	120.2	583.2	81	0.59
Av ORV 600x100/80	120.2	623.2	81	0.63
Av ORV 150x150/125	170.2	183.2	126	0.32
Av ORV 200x150/125	170.2	223.2	126	0.37
Av ORV 250x150/125	170.2	283.2	126	0.43
Av ORV 300x150/125	170.2	323.2	126	0.48
Av ORV 350x150/125	170.2	383.2	126	0.53
Av ORV 400x150/125	170.2	423.2	126	0.59
Av ORV 450x150/125	170.2	483.2	126	0.64
Av ORV 500x150/125	170.2	523.2	126	0.69
Av ORV 550x150/125	170.2	583.2	126	0.75
Av ORV 600x150/125	170.2	623.2	126	0.8
Av ORV 200x200/150	220.2	223.2	151	0.45
Av ORV 250x200/150	220.2	283.2	151	0.51
Av ORV 300x200/150	220.2	323.2	151	0.58
Av ORV 350x200/150	220.2	283.2	151	0.64
Av ORV 400x200/150	220.2	423.2	151	0.7
Av ORV 450x200/150	220.2	483.2	151	0.77
Av ORV 500x200/150	220.2	523.2	151	0.83
Av ORV 550x200/150	220.2	583.2	151	0.89
Av ORV 600x200/150	220.2	623.2	151	0.95
Av ORV 250x250/150	270.2	283.2	201	0.6
Av ORV 300x250/150	270.2	323.2	201	0.66
Av ORV 350x250/150	270.2	383.2	201	0.74
Av ORV 400x250/150	270.2	423.2	201	0.81
Av ORV 450x250/150	270.2	483.2	201	0.88

Code (grille size, mm)	a [mm]	b [mm]	ØD [mm]	Weight [kg]
Av ORV 500x250/150	270.2	523.2	201	0.96
Av ORV 550x250/150	270.2	583.2	201	1.03
Av ORV 600x250/150	270.2	623.2	201	1.1
Av ORV 300x300/200	320.2	323.2	201	0.75
Av ORV 350x300/200	320.2	383.2	201	0.83
Av ORV 400x300/200	320.2	423.2	201	0.91
Av ORV 450x300/200	320.2	483.2	201	0.99
Av ORV 500x300/200	320.2	523	201	1.08
Av ORV 550x300/200	320.2	573	201	1.16
Av ORV 600x300/200	320.2	623	201	1.24
Av ORV 350x350/315	370.6	373	316	0.87
Av ORV 400x350/315	370.6	423	316	0.97
Av ORV 450x350/315	370.6	473	316	1.06
Av ORV 500x350/315	370.6	523	316	1.15
Av ORV 550x350/315	370.6	573	316	1.25
Av ORV 600x350/315	370.6	623	316	1.34
Av ORV 400x400/350	420.6	423	350	0.97
Av ORV 450x400/350	420.6	473	350	1.07
Av ORV 500x400/350	420.6	523	350	1.18
Av ORV 550x400/350	420.6	573	350	1.28
Av ORV 600x400/350	420.6	623	350	1.38
Av ORV 450x450/400	470.6	473	400	1.29
Av ORV 500x450/400	470.6	523	400	1.4
Av ORV 550x450/400	470.6	573	400	1.51
Av ORV 600x450/400	470.6	623	400	1.62
Av ORV 500x500/400	520.6	523	400	1.52
Av ORV 550x500/400	520.6	573	400	1.64
Av ORV 600x500/400	520.6	623	400	1.77
Av ORV 200x140/100	320.6	423	101	0.89
Av ORV 240x140/100	220.6	232	101	0.56
Av ORV 400x300/100	220.6	423	101	0.68
Av ORV 300x200/100	170.6	273	101	0.42
Av ORV 400x200/100	470.6	473	400	1.29
Av ORV 250x150/100	420.6	523	400	1.4

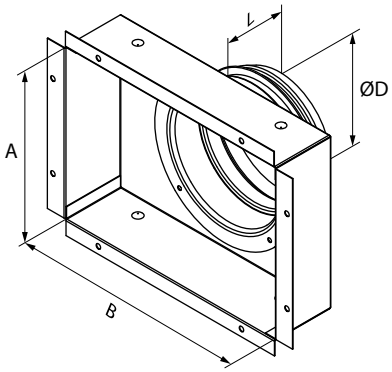

Adapter designation guide



Adapter name
Ad: adapter

Mating part
A: disk valve
V: domestic fan

Dimensions [mm]
Nominal spigot diameter for connection to an air duct

Package size
Default – header bag
Thermal package – (t/p)
Sealed bag – (s/b)
Unsealed bag – (ns/b)

Designation example

Short name	Full name	Description
Ad A 100	Ad A 100 adapter	Adapter for a disk valve 100 mm in diameter, packing – header bag
Ad V 150 (s/b)	Ad V 150 (s/b) adapter	Adapter for a domestic fan 150 mm in diameter, packing – sealed bag

Adapter
A DVK/DVP

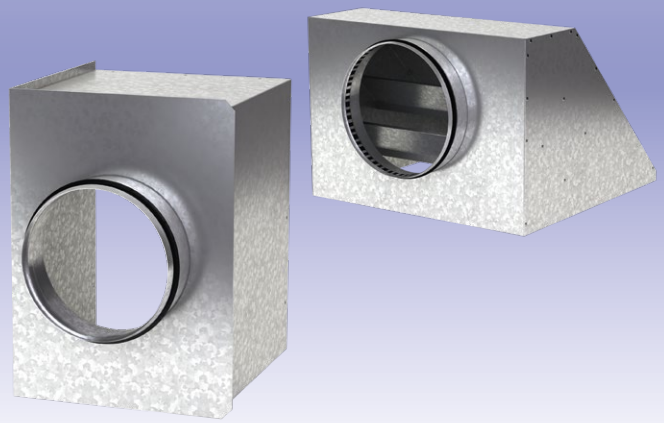

Application

- For connection of the square ceiling diffusers DVP and DVK to round air ducts.

Design

- Made of galvanized steel.
- Equipped with a sealing ring for tight connection to air ducts.
- Two modifications: vertical and horizontal connection to an air duct.

Overall dimensions and mounting dimensions of the adapter for ceiling diffusers

Order code (grille size, mm)	a [mm]	b [mm]	øD [mm]	K [mm]	Weight [kg]
Ab DVP/DVK 295x295/125	292.6	292.6	125	347	1.42
Av DVP/DVK 295 x295/125	292.6	292.6	125	305.5	1.88
Ab DVP/DVK 295x295/140	292.6	292.6	140	347	1.44
Av DVP/DVK 295 x295/140	292.6	292.6	140	305.5	1.88
Ab DVP/DVK 305x305/125	302.6	302.6	125	357	1.49
Av DVP/DVK 305x305/125	302.6	302.6	125	305.5	1.96
Ab DVP/DVK 305x305/140	302.6	302.6	140	357	1.51
Av DVP/DVK 305x305/140	302.6	302.6	140	305.5	1.96
Ab DVP/DVK 395x395/160	392.6	392.6	160	447	2.46
Av DVP/DVK 395x395/160	392.6	392.6	160	305.5	2.69
Ab DVP/DVK 395x395/200	392.6	392.6	200	447	2.52
Av DVP/DVK 395x395/200	392.6	392.6	200	305.5	2.69
Ab DVP/DVK 445x445/160	442.6	442.6	160	497	2.9
Av DVP/DVK 445x445/160	442.6	442.6	160	305.5	3.1
Ab DVP/DVK 445x445/200	442.6	442.6	200	497	2.9
Av DVP/DVK 445x445/200	442.6	442.6	200	305.5	3.1
Ab DVP/DVK 495x495/200	492.6	492.6	200	547	3.94
Av DVP/DVK 495x495/200	492.6	492.6	200	305.5	3.59
Ab DVP/DVK 495x495/250	492.6	492.6	250	547	4
Av DVP/DVK 495x495/250	492.6	492.6	250	305.5	3.55
Ab DVP/DVK 595x595/250	592.6	592.6	250	647	5.44
Ab DVP/DVK 595x595/200	592.6	592.6	200	647	5.51
Av DVP/DVK 595x595/250	592.6	592.6	250	305.5	4.55
Ab DVP/DVK 595x595/315	592.6	592.6	315	647	5.55
Av DVP/DVK 595x595/315	592.6	592.6	315	305.5	4.47
Ab DVP/DVK 620x620/250	617.6	617.6	250	672	5.77
Av DVP/DVK 620x620/250	617.6	617.6	250	305.5	4.81
Ab DVP/DVK 620x620/315	617.6	617.6	315	672	5.89
Av DVP/DVK 620x620/315	617.6	617.6	315	305.5	4.73
Ab DVP/DVK 695x695/250	692.6	692.6	250	747	6.54
Av DVP/DVK 695x695/250	692.6	692.6	250	305.5	5.64
Ab DVP/DVK 695x695/315	692.6	692.6	315	747	6.63
Av DVP/DVK 695x695/315	692.6	692.6	315	305.5	5.56
Ab DVP/DVK 795x795/250	792.6	792.6	250	847	7.98
Av DVP/DVK 795x795/250	792.6	792.6	250	305.5	6.83
Ab DVP/DVK 795x795/315	792.6	792.6	315	847	8.13
Av DVP/DVK 795x795/315	792.6	792.6	315	305.5	6.75

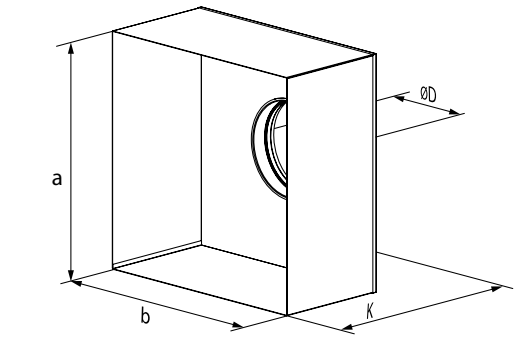

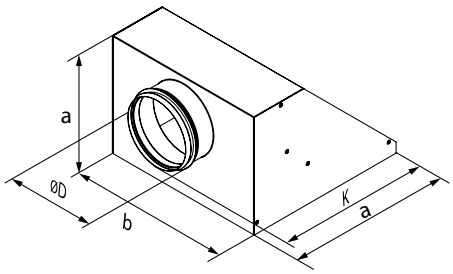

Order generation system



Model

A

Connection to a duct

b – horizontal connection

v – vertical connection

Type of the connected unit

The adapter can be used for the following unit types:

DVP

DVK

Spigot diameter [mm]

Nominal diameter of the spigot for connection to an air duct

Characteristic dimension (1 figure for round and 2 figures for rectangular and square) [mm]

100x100 – adapter is designed for specified type of grilles with characteristic dimension of 100x100 mm

150 – adapter is designed for specified grille or diffuser type with characteristic diameter of 150 mm

Adapter

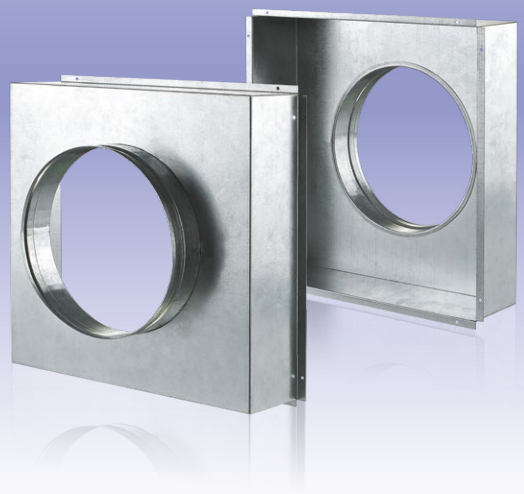

Application

- For connection of the DP, ORH, ORV, ONH, ONV, ORK, ONL, ONS ventilation grilles with round air ducts.

Design

- Made of galvanized steel.
- Equipped with a sealing ring for tight connection to air ducts.

Overall and mounting dimensions [mm]

Order code (grille size [mm])	L [mm]	H [mm]	øD [mm]	K [mm]	Weight [kg]
A (100x100)	86.4	96.4	80	100	0.053
A (100x150)	86.4	146.4			0.081
A (100x200)	86.4	196.4			0.108
A (100x250)	86.4	246.4			0.136
A (100x300)	86.4	296.4			0.164
A (100x350)	86.4	346.4			0.191
A (100x400)	86.4	396.4			0.219
A (100x450)	86.4	446.4			0.246
A (100x500)	86.4	496.4			0.274
A (150x150)	136.4	146.4	125		0.128
A (150x200)	136.4	196.4			0.171
A (150x250)	136.4	246.4			0.215
A (150x300)	136.4	296.4			0.258
A (150x350)	136.4	346.4			0.302
A (150x400)	136.4	396.4			0.345
A (150x450)	136.4	446.4			0.389
A (150x500)	136.4	496.4			0.432
A (150x600)	136.4	596.4			0.519
A (200x200)	186.4	196.4	150		0.234
A (200x250)	186.4	246.4			0.293
A (200x300)	186.4	296.4			0.353
A (200x350)	186.4	346.4			0.412
A (200x400)	186.4	396.4			0.472
A (200x450)	186.4	446.4			0.531
A (200x500)	186.4	496.4			0.591
A (200x600)	186.4	596.4			0.710
A (250x250)	236.4	246.4	200		0.372
A (250x300)	236.4	296.4			0.447
A (250x350)	236.4	346.4			0.523
A (250x400)	236.4	396.4			0.598
A (250x450)	236.4	446.4			0.674
A (250x500)	236.4	496.4			0.749
A (300x300)	236.4	296.4			0.542
A (300x350)	236.4	346.4			0.634
A (300x400)	236.4	396.4			0.725
A (300x450)	236.4	446.4			0.816
A (300x500)	236.4	496.4			0.908
A (300x600)	236.4	596.4			1.091
A (350x350)	336.4	346.4	315	150	0.744
A (350x400)	336.4	396.4			0.852
A (350x450)	336.4	446.4			0.959
A (350x500)	336.4	496.4			1.066
A (400x400)	386.4	396.4	350		0.978
A (400x450)	386.4	446.4			1.102
A (400x500)	386.4	496.4			1.225
A (450x450)	436.4	446.4	400		1.244
A (450x500)	436.4	496.4			1.383
A (500x500)	486.4	496.4			1.542

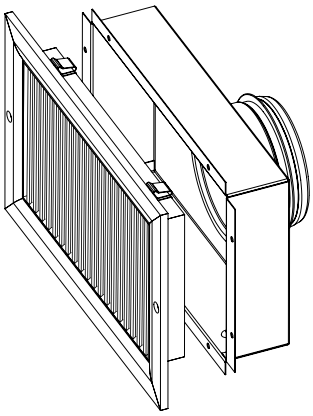

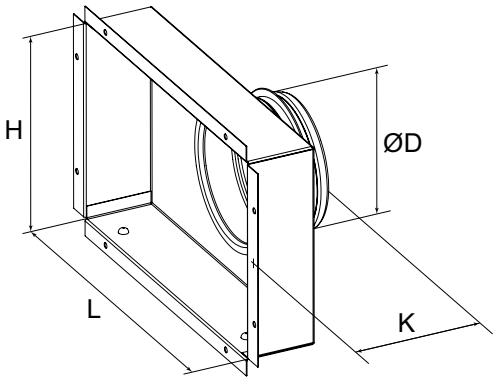

Air flow regulator

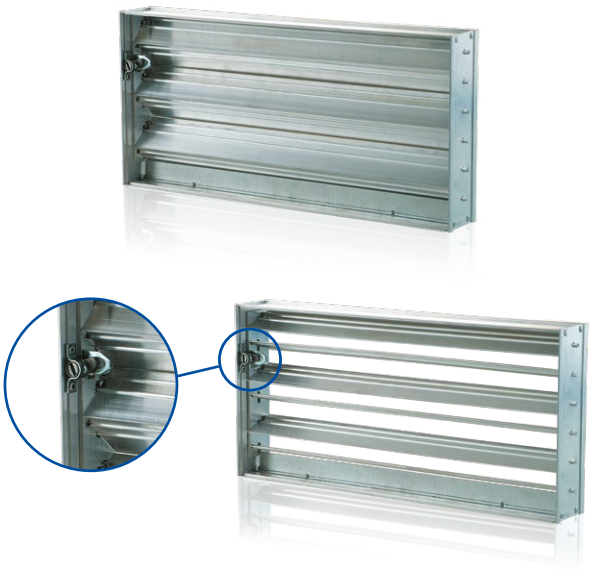

Application

- Multi-vane air flow regulator with counter-rotated vanes is designed for air flow regulation of the DR, ORH, ORV, ONV, ORK, ONL, ONS ventilation grilles.

Design

- Made of galvanized steel. The aluminium rotating vanes are turned due to plastic gears.
- Equipped with a limit position stopper regulated by a butterfly bolt.

Overall and mounting dimensions [mm]

Order code (grille size [mm])	L [mm]	H [mm]	L1 [mm]	H1 [mm]	Weight [kg]
R (100x100)	79		86		0.125
R (100x150)	129		136		0.168
R (100x200)	179		186		0.21
R (100x250)	229		236		0.253
R (100x300)	279	79	286	81.8	0.295
R (100x350)	329		336		0.343
R (100x400)	379		386		0.38
R (100x450)	429		436		0.425
R (100x500)	479		486		0.465
R (150x150)	129		136		0.235
R (150x200)	176		186		0.295
R (150x250)	226		236		0.355
R (150x300)	279		286		0.415
R (150x350)	329	129	336	131.8	0.475
R (150x400)	379		386		0.535
R (150x450)	429		436		0.295
R (150x500)	476		486		0.655
R (150x600)	579		586		0.775
R (200x200)	179		186		0.406
R (200x250)	229		236		0.477
R (200x300)	279		286		0.548
R (200x350)	329	179	336	181.8	0.619
R (200x400)	379		386		0.69
R (200x450)	429		436		0.761
R (200x500)	476		486		0.832
R (200x600)	579		586		1.0
R (250x250)	229		236		0.63
R (250x300)	279		286		0.7
R (250x350)	329	229	336	231.8	0.77
R (250x400)	379		386		0.84
R (250x450)	429		436		0.91
R (250x500)	479		486		0.98
R (300x300)	279		286		0.75
R (300x350)	329		336		0.855
R (300x400)	379	279	386	281.8	0.96
R (300x450)	429		436		1.065
R (300x500)	479		486		1.175
R (300x600)	579		586		1.39
R (350x350)	329		336		0.9
R (350x400)	379	319	386	321.8	1.13
R (350x450)	429		436		1.36
R (350x500)	479		486		1.59
R (400x400)	379		386		1.2
R (400x450)	429	379	436	381.8	1.43
R (400x500)	479		486		1.66
R (450x450)	429	429	436	431.8	1.52
R (450x500)	479		486		1.77
R (500x500)	479	479	486	481.8	2

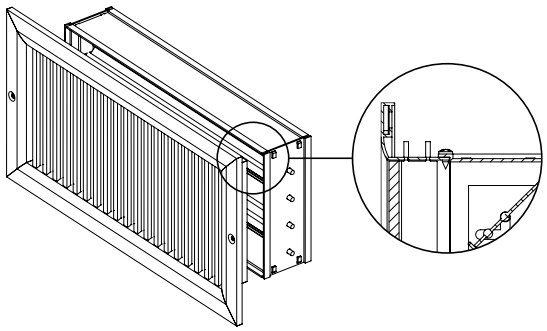

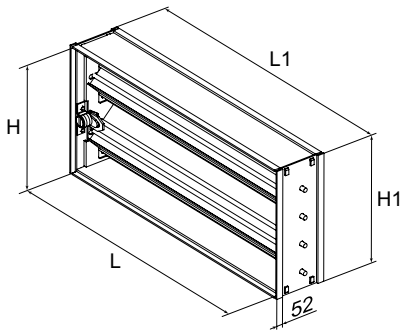

Standard fixing

Fixing with a mounting pair (not included into the delivery set)

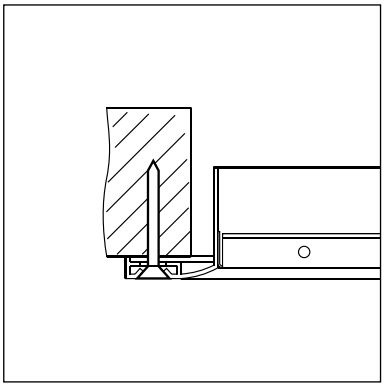

Features:

- mounting pair: versatile screw 3.5x35 mm; nylon dowel 6x40 mm;
- used for grille fixation into concrete or brick walls;
- the screw head has the grille colour;
- cross-shaped slot.

Versatile fixing

Fixing with a versatile lock fixed on the grille

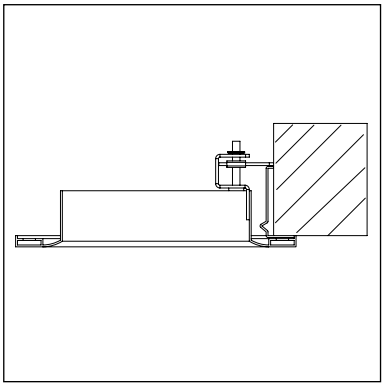

Features:

- versatile lock enables mounting into walls and ceilings
- easy mounting with a screw-driver
- concealed fixing.

Spring fixation

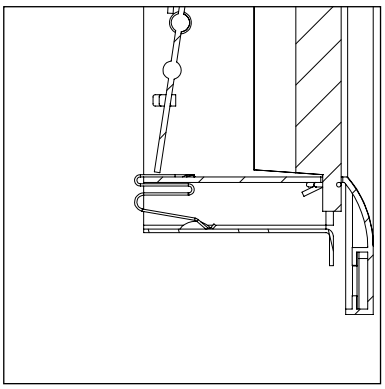

Features:

- mounting into walls (no ceiling mounting);
- concealed fixing.

The mounting kit delivery set includes:

- flange for fixation of the grille into the wall opening;
- set of springs.

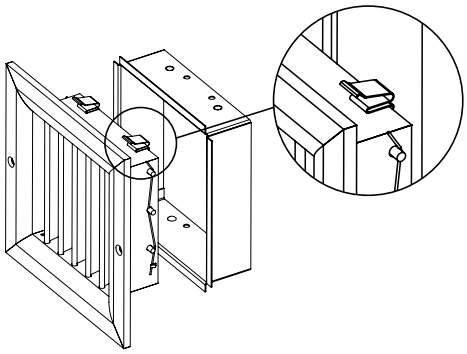

VENTS WORLD VENTILATION LEADER

ventilation systems

www.ventilation-system.com

Domestic ventilation



DOMESTIC VENTILATION

VENTS reserves the rights to modify any of its products' features, designs, components and specifications at any time and without notice to maintain the development and quality of manufactured goods.

2025-04

HVI MEMBER

ventilation.system

2025